LEFT INSIDE VIEW

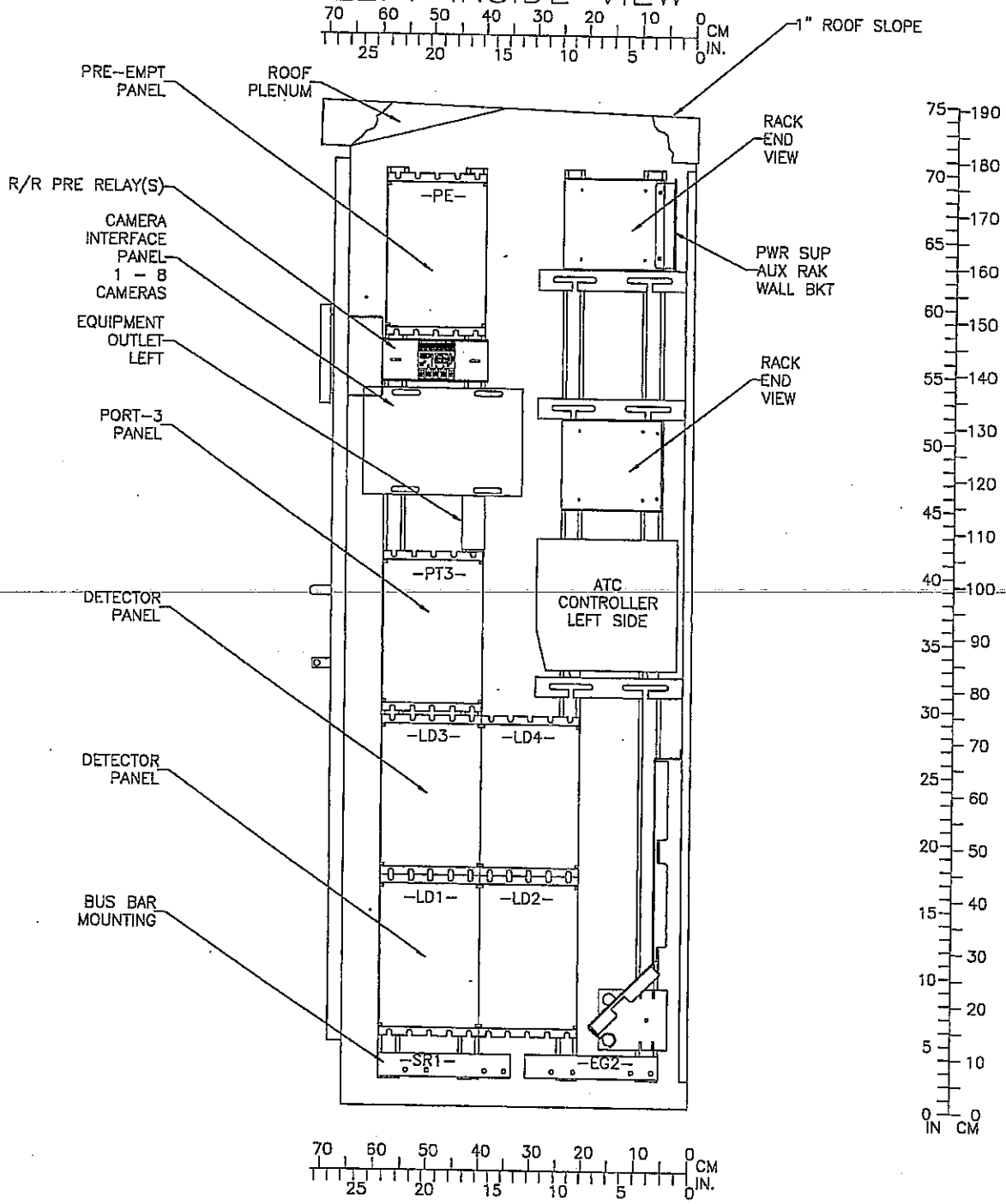

REV	DATE	DRAWN	CHANGE	APPD
5	11-28-11	GMC	ADD 12V EQU OUT, 120 CABINET LIGHTS & 2000 STOP GUIDE WELDING NOTE	BB
4	03-06-10	GMC	ADD SNAP TRACK FOR RELAY BELOW PRE PANEL	BB
3	08-22-08	GMC	SWAP CIP AND PT3 PANEL MOVED BACKWARD, LEFT 1"	BB
2	01-04-08	GMC	ADD RE, PT3, EQU OS, EG2, AND MOVED SIGN TERMS	BB
1	11-03-07	GMC	REMOVAL PT3 END USER SPEC	BB
0	05-17-03	GMC	RELEASE TO PRODUCTION	BB

APPROVALS		DATE
DRAWN BY	JM	11-03-07
CHECKED BY	BB	11-03-07

PEEK

2906 CORPORATE WAY
PALMETTO, FLORIDA 34221, USA

This document and the information it contains are the property of Peek and are proprietary and confidential to Peek. Any unauthorized publication, copying, use, reproduction, disclosure, or transmission of the document or information by any means (including electronic means) is prohibited.

TITLE: 16 LDSW CABINET ASSY SUFFOLK VA

ANSI A | DRAWING NO. R44DD_CA-VA75-002 | REV 5 | SHT 1 OF 6

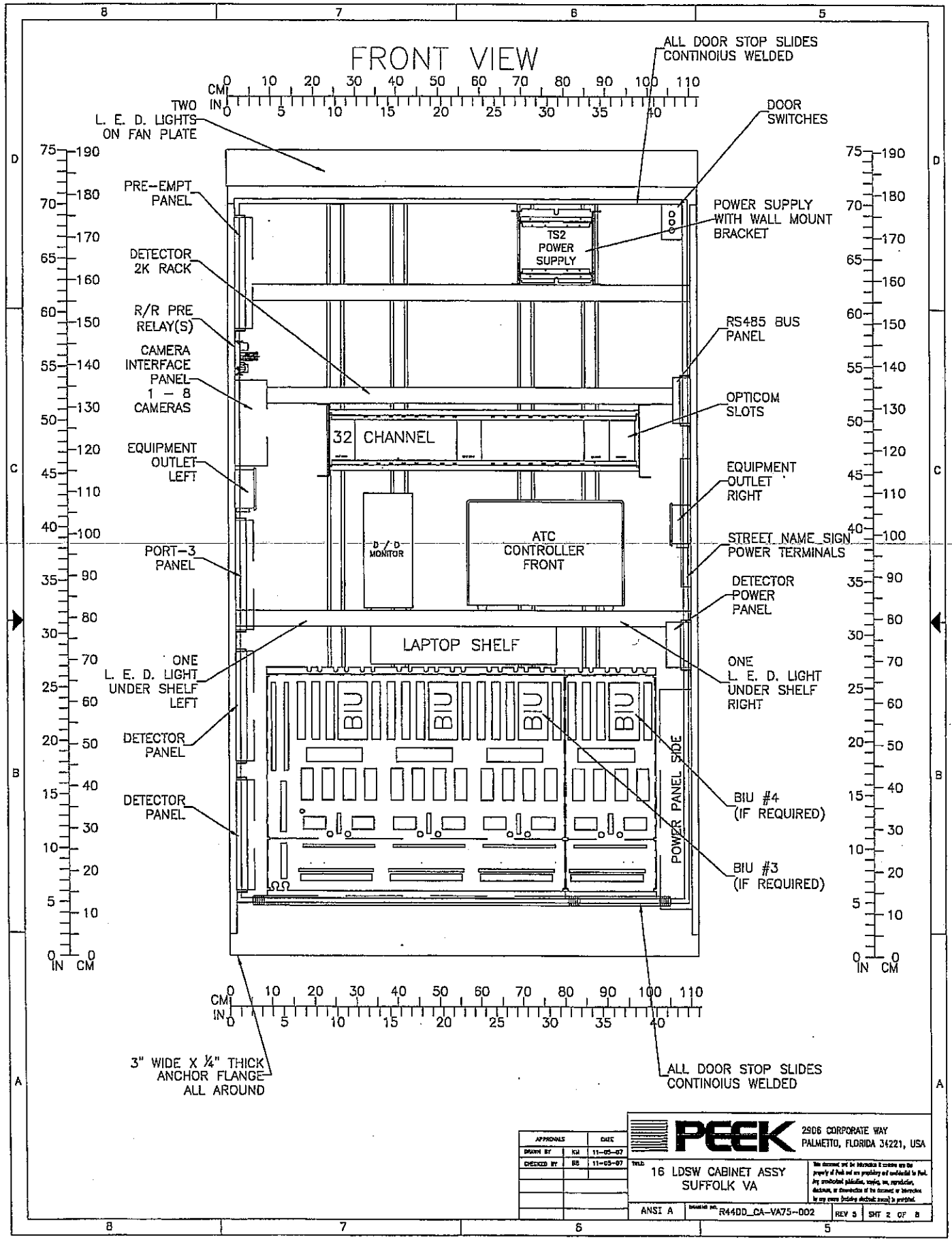
FRONT VIEW
ALL DOOR STOP SLIDES CONTINOIUS WELDED
TWO L. E. D. LIGHTS ON FAN PLATE
DOOR SWITCHES
PRE-EMPT PANEL
POWER SUPPLY WITH WALL MOUNT BRACKET
TS2 POWER SUPPLY
DETECTOR 2K RACK
R/R PRE RELAY(S)
RS485 BUS PANEL
CAMERA INTERFACE PANEL 1 – 8 CAMERAS
OPTICOM SLOTS
32 CHANNEL
EQUIPMENT OUTLET LEFT
EQUIPMENT OUTLET RIGHT
D / D MONITOR
ATC CONTROLLER FRONT
STREET NAME SIGN POWER TERMINALS
PORT-3 PANEL
DETECTOR POWER PANEL
LAPTOP SHELF
ONE L. E. D. LIGHT UNDER SHELF LEFT
ONE L. E. D. LIGHT UNDER SHELF RIGHT
BIU
BIU
BIU
BIU
POWER PANEL SIDE
DETECTOR PANEL
BIU #4 (IF REQUIRED)
DETECTOR PANEL
BIU #3 (IF REQUIRED)
3" WIDE X ¼" THICK ANCHOR FLANGE ALL AROUND
ALL DOOR STOP SLIDES CONTINOIUS WELDED
PEEK
2906 CORPORATE WAY
PALMETTO, FLORIDA 34221, USA
APPROVALS
DATE
DRAWN BY
KM
11-05-07
CHECKED BY
BS
11-05-07
TITLE
16 LDSW CABINET ASSY
SUFFOLK VA
ANSI A
DRAWING NO. R44DD_CA-VA75-002
REV 5
SHT 2 OF 8

INSIDE MAIN DOOR VIEW

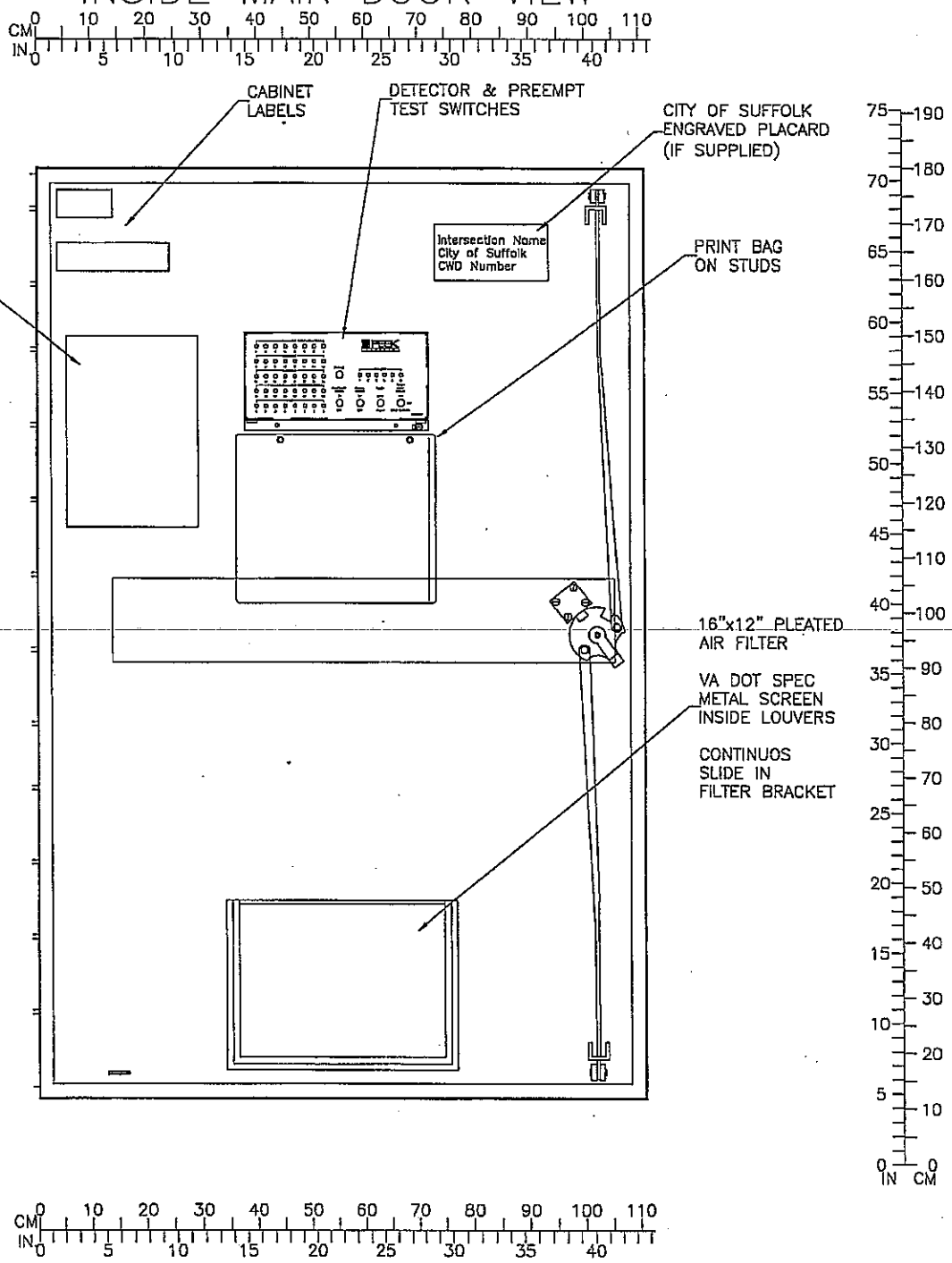

APPROVALS		DATE
DRAWN BY	KM	11-05-07
CHECKED BY	BB	11-05-07

PEEK
2906 CORPORATE WAY
PALMETTO, FLORIDA 34221, USA

TITLE: 16 LDSW CABINET ASSY SUFFOLK VA

This document and the information it contains are the property of Peek and are proprietary and confidential to Peek. Any unauthorized publication, copying, use, reproduction, disclosure, or dissemination of the document or information by any means (including electronic media) is prohibited.

ANSI A | DRAWING NO. R44DD_CA-VA75-002 | REV 5 | SHT 3 OF 8

RIGHT INSIDE VIEW

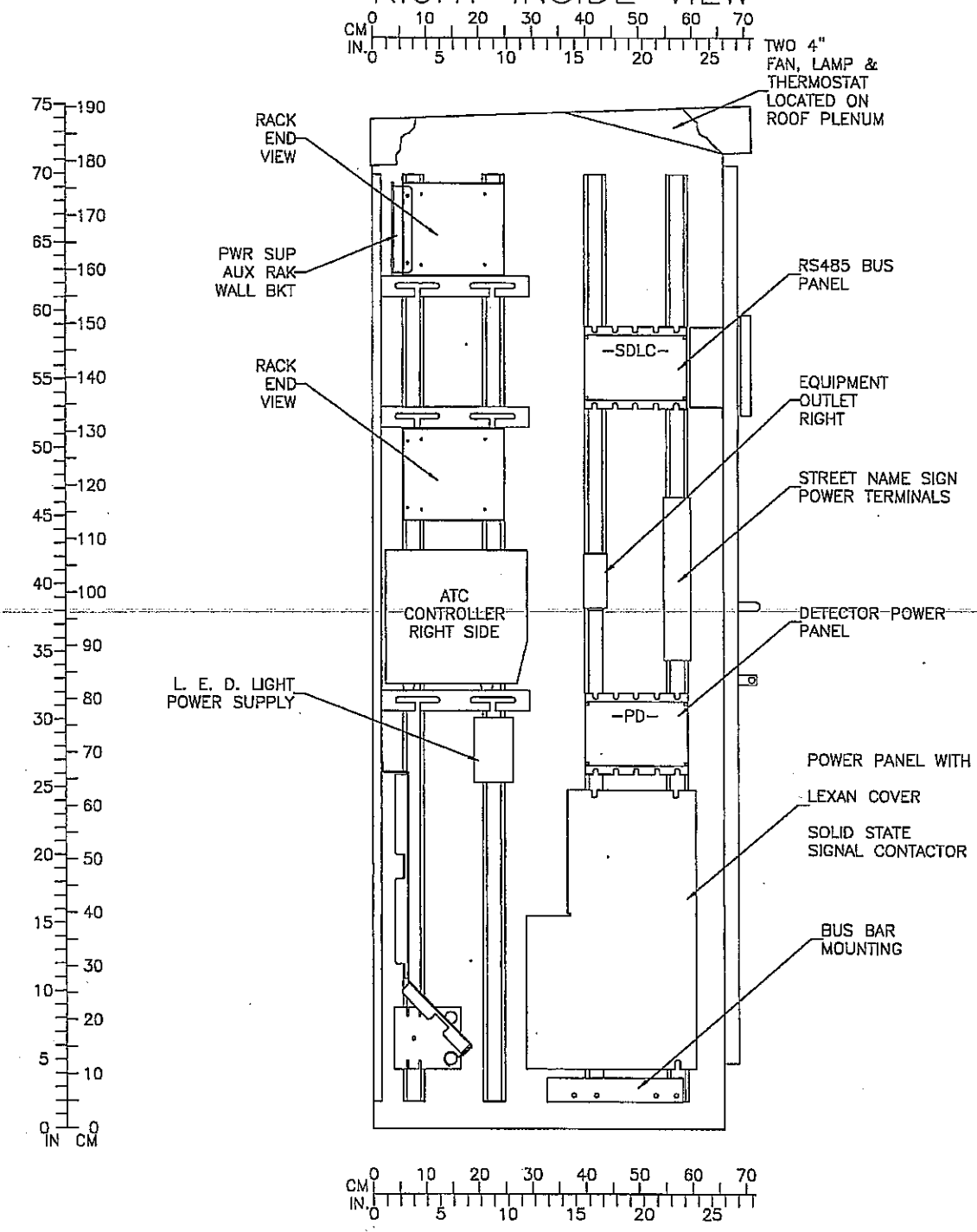

APPROVALS		DATE
DRAWN BY	KM	11-05-07
CHECKED BY	BB	11-05-07

PEEK 2906 CORPORATE WAY PALMETTO, FLORIDA 34221, USA

TITLE: 16 LDSW CABINET ASSY SUFFOLK VA

This document and the information it contains are the property of Peek and are proprietary and confidential to Peek. Any unauthorized publication, copying, use, reproduction, disclosure, or dissemination of the document or information by any means (including electronic media) is prohibited.

ANSI A | DRAWING NO. R44DD_CA-VA75-002 | REV 5 | SHT 4 OF 8

OUTSIDE BACK DOOR VIEW

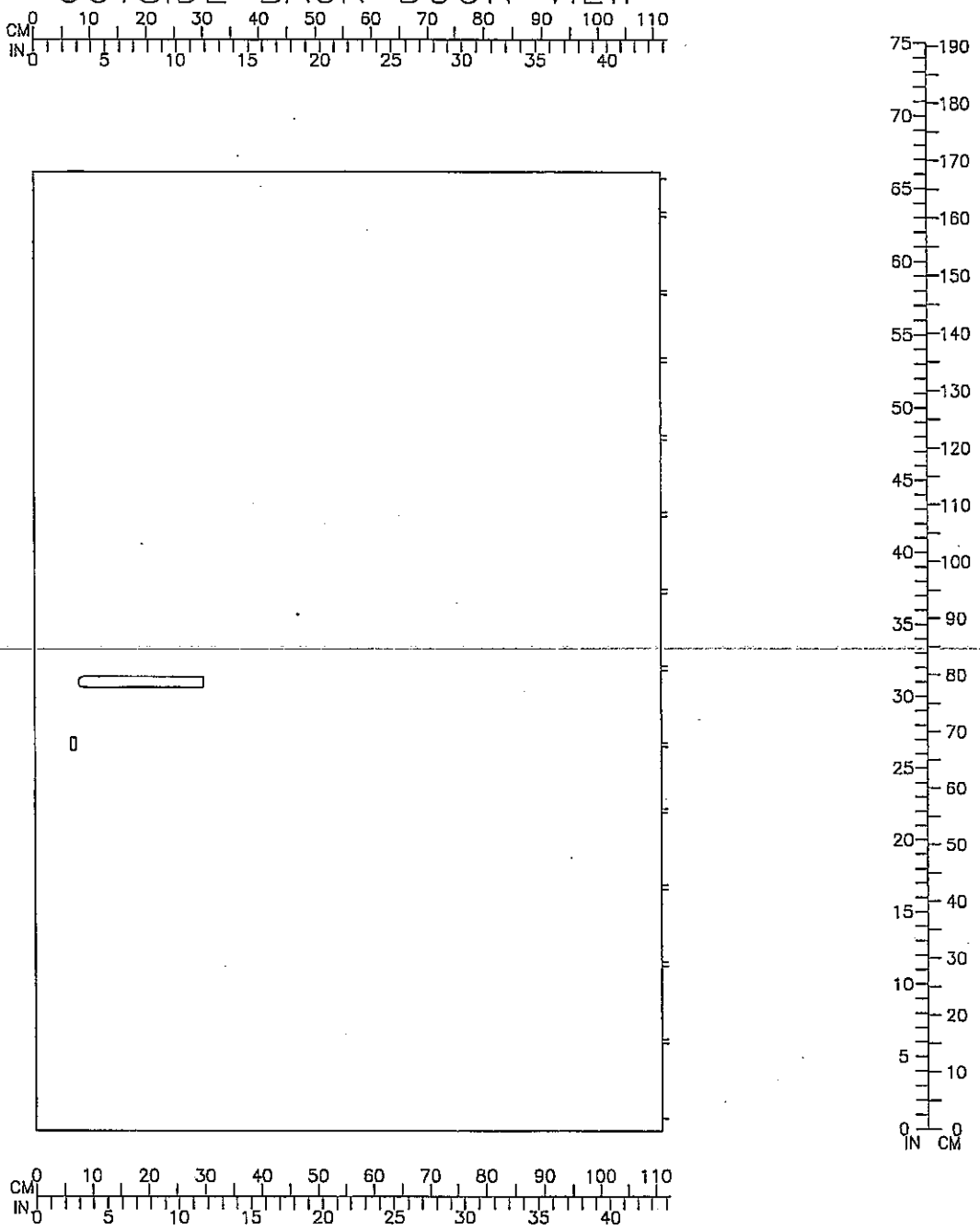

APPROVALS		DATE
DRAWN BY	KM	11-05-07
CHECKED BY	DG	11-05-07

PEEK
2906 CORPORATE WAY
PALMETTO, FLORIDA 34221, USA

TITLE
16 LDSW CABINET ASSY
SUFFOLK VA

This document and the information it contains are the property of Peek and are proprietary and confidential in nature. Any unauthorized publication, copying, use, reproduction, disclosure, or description of the document or information by any means (including electronic means) is prohibited.

DRAWING NO. R44DD_CA-VA75-002 | REV 5 | SHT 5 OF 5

GLOSS BLACK
WITH WHITE LETTERS

INTERSECTION NAME
CUSTOMIZED PER PLANS
FROM THE CITY OF SUFFOLK

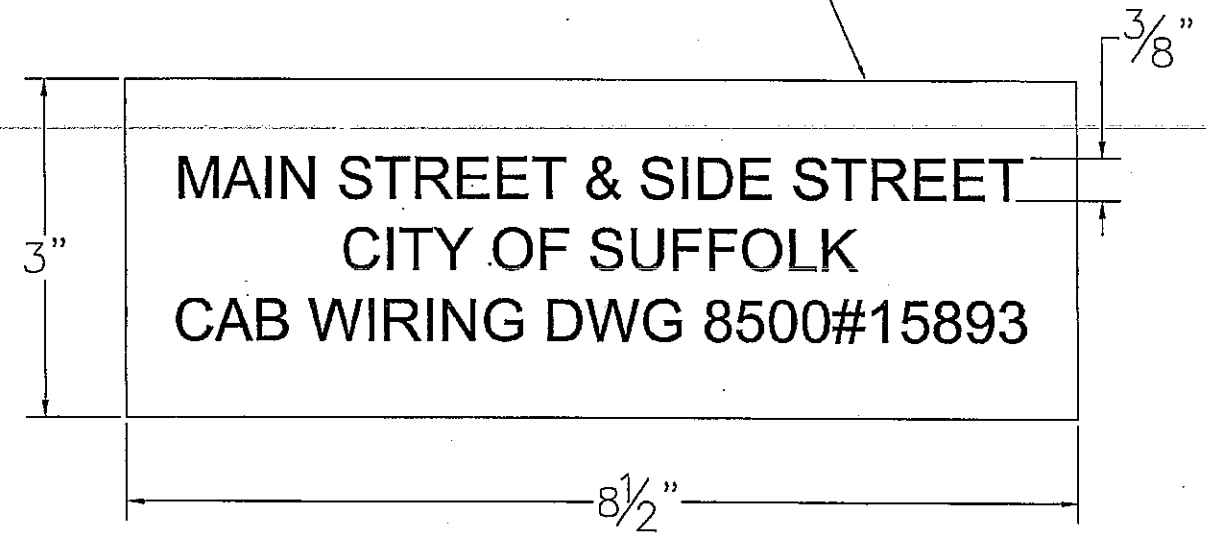

APPROVALS		DATE
DRAWN BY	KM	11-05-07
CHECKED BY	BB	11-05-07

PEEK
2906 CORPORATE WAY
PALMETTO, FLORIDA 34221, USA

TITLE 16 LDSW CABINET ASSY
SUFFOLK VA

This document and the information it contains are the property of Peek and are proprietary and confidential to Peek. Any unauthorized publication, copying, use, reproduction, disclosure, or downloading of the document or information by any means (including electronic media) is prohibited.

ANSI A | DRAWING NO. R44DD_CA-VA75-002 | REV 5 | SHT 5 OF 8

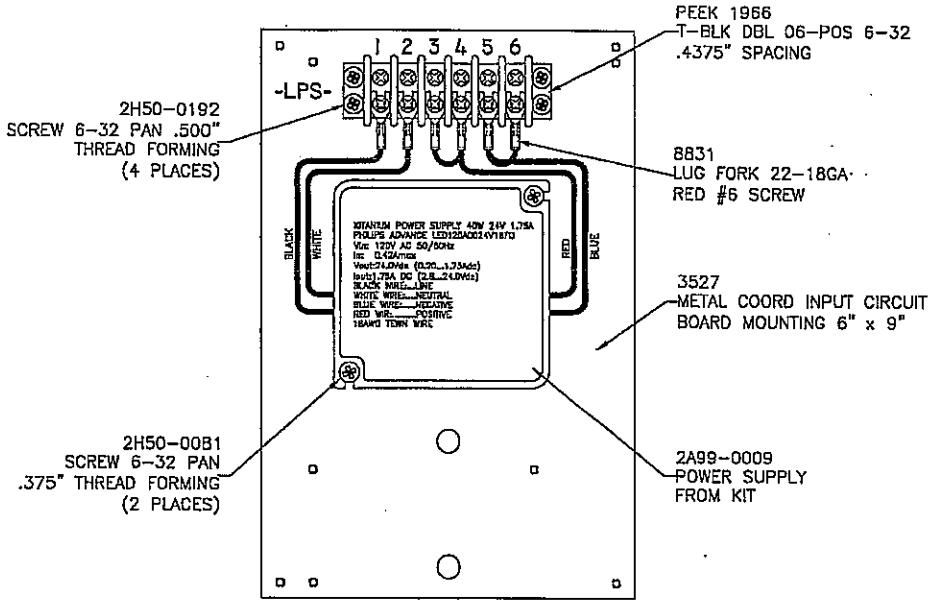

115-195 LED LIGHTING POWER SUPPLY

LOCATED ON FAN PLATE (CENTERED)

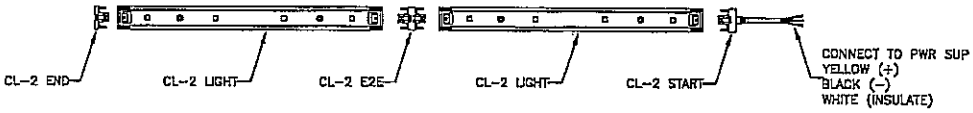

LOCATED UNDER BOTTOM SHELF

(SEE PAGE-7)

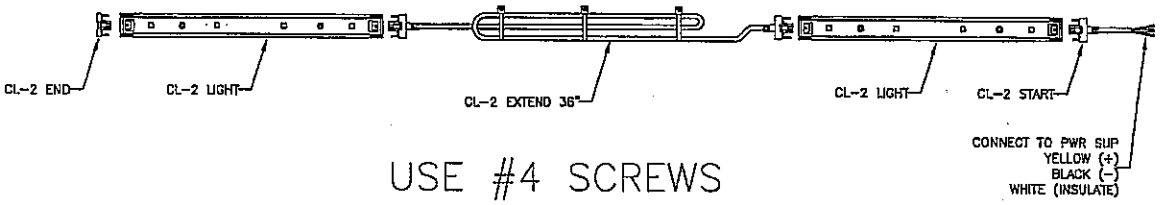

USE #4 SCREWS

APPROVALS		DATE
DRAWN BY	KM	11-05-07
CHECKED BY	BB	11-05-07

PEEK 2905 CORPORATE WAY PALMETTO, FLORIDA 34221, USA

TITLE 16 LDSW CABINET ASSY SUFFOLK VA

The document and its information contained herein are the property of Peek and are proprietary and confidential to Peek. Any unauthorized publication, copying, use, reproduction, disclosure, or dissemination of the document or information by any means (including electronic means) is prohibited.

DRAWING NO. R44DD_CA-VA75-002 | REV 5 | SHT 7 OF 8

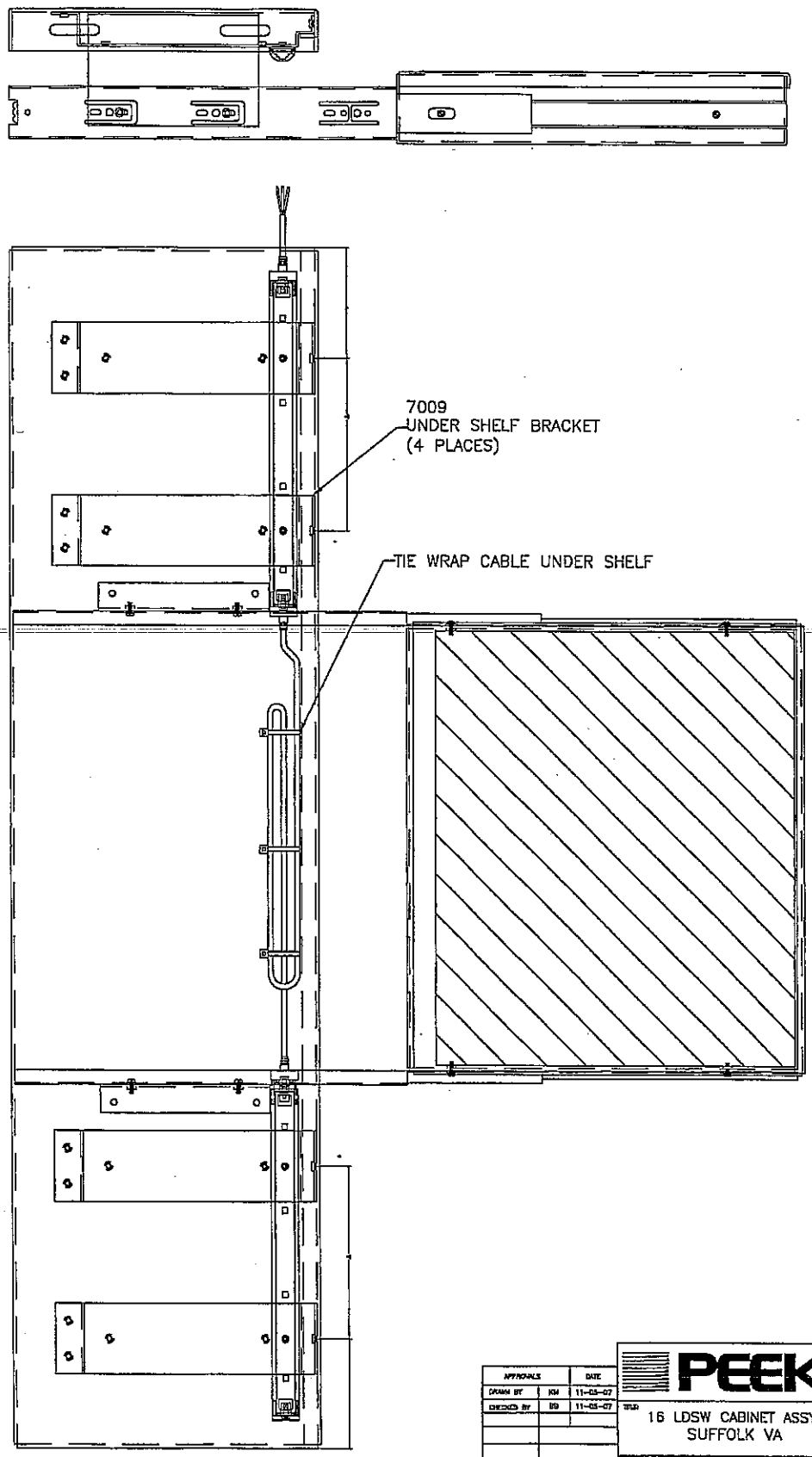

APPROVALS		DATE
DRAWN BY	KM	11-03-07
CHECKED BY	DD	11-03-07

PEEK

2905 CORPORATE WAY
PALMETTO, FLORIDA 34221, USA

TITLE: 16 LDSW CABINET ASSY
SUFFOLK VA

This document and the information it contains are the property of Peek and are proprietary and confidential to Peek. Any unauthorized publication, copying, use, reproduction, disclosure, or dissemination of the document or information by any means (including electronic means) is prohibited.

DRAWING NO. R44DD_CA-VA75-002 | REV 5 | SHT 8 OF 8