DEPARTMENT OF TRANSPORTATION

FOR INDEX OF SHEETS SEE SHEET 1B

THIS PROJECT WAS DEVELOPED UTILIZING THE DEPARTMENT'S ENGINEERING DESIGN PACKAGE (GEOPAK).
GEOPAK Computer Identification No. 61407

FHWA 534 DATA
4H004

STATE	FEDERAL AID PROJECT	STATE ROUTE	STATE PROJECT	SHEET NO.
VA.	STP-5A03( ) SEE TABULATION BELOW FOR SECTION NUMBERS	337	(NFO) 0337-133-101 PE-102, RW-202 C-502 (SEE TABULATION BELOW FOR SECTION NUMBERS)	1

FUNCTIONAL CLASSIFICATION AND TRAFFIC DATA	
Nansemond Parkway Urban Minor Arterial - Divided - Flat 45 MPH Design Speed	
	Fr: 0.327 Mile e. of Shoulders Hill Road (Rte.626) To: 0.770 Mile E.of Shoulders Hill Road (Rte.626)
ADT (2012)	15,740
ADT (2034)	30,170
DHV (2034)	5,785 (PM)
D (%) (design hour)	55 (WB PM HOUR)
T (%) (design hour)	5
V (MPH)	45

COMMONWEALTH OF VIRGINIA

CITY OF SUFFOLK, VIRGINIA

PLAN AND PROFILE OF PROPOSED STATE HIGHWAY

ROUTE 337 (NANSEMOND PARKWAY)
From: 0.327 Mile E.of Shoulders Hill Road (Rte.626)
To: 0.770 Mile E.of Shoulders Hill Road (Rte.626)

REVISED 1/8/16

FINAL PLANS

DESCRIPTION REFERENCE
STA 60+00.00 - SHOULDERS HILL RD INTERSECTION

PROJECT MANAGER Sherry Earley, P.E., City of Suffolk (757) 514-7703
SURVEYED BY PML INC. (757) 368-0945
DESIGN SUPERVISED BY Ian Johnston, P.E., Clark Nexsen (757) 455-5800
DESIGNED BY Clark Nexsen (757) 455-5800

CONVENTIONAL SIGNS

STATE LINE
COUNTY LINE
CITY/TOWN OR VILLAGE
RIGHT OF WAY LINE
FENCE LINE
UNFENCED PROPERTY LINE
FENCED PROPERTY LINE
WATER LINE
SANITARY SEWER LINE
GAS LINE
ELECTRIC UNDERGROUND CABLE
TRAVELED WAY
GUARD RAIL
RETAINING WALL
RAILROADS
BASE OR SURVEY LINE

LEVEE OR EMBANKMENT
BRIDGES
CULVERTS
DROP INLET
POWER POLES
TELEPHONE OR TELEGRAPH POLES
TELEPHONE OR TELEGRAPH LINES
HEDGE
TREES
HEAVY WOODS
GROUND ELEVATION
GRADE ELEVATION

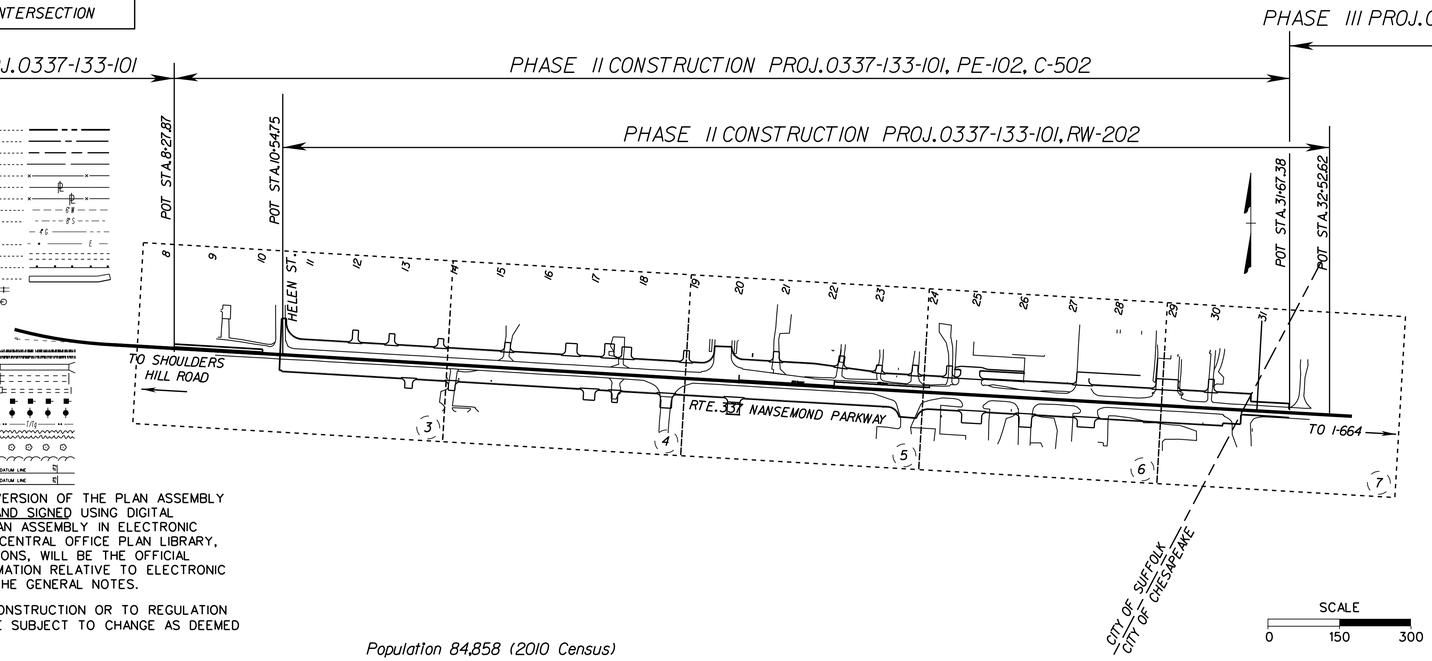

THE COMPLETE ELECTRONIC PDF VERSION OF THE PLAN ASSEMBLY AS AWARDED, HAS BEEN SEALED AND SIGNED USING DIGITAL SIGNATURES AND THE OFFICIAL PLAN ASSEMBLY IN ELECTRONIC FORMAT IS STORED IN THE VDOT CENTRAL OFFICE PLAN LIBRARY, INLCUDING ALL SUBSEQUENT REVISIONS, WILL BE THE OFFICIAL CONSTRUCTION PLANS. FOR INFORMATION RELATIVE TO ELECTRONIC FILES AND LAYERED PLANS, SEE THE GENERAL NOTES.

DESIGN FEATURES RELATING TO CONSTRUCTION OR TO REGULATION AND CONTROL OF TRAFFIC MAY BE SUBJECT TO CHANGE AS DEEMED NECESSARY BY THE DEPARTMENT.

THIS PROJECT IS TO BE CONSTRUCTED IN ACCORDANCE WITH THE DEPARTMENT'S 2007 ROAD AND BRIDGE SPECIFICATIONS, 2008 ROAD AND BRIDGE STANDARDS, 2009 MUTCD, 2011 VIRGINIA SUPPLEMENT TO THE MUTCD, 2011 WORK AREA PROTECTION MANUAL AND AS AMENDED BY CONTRACT PROVISIONS AND THE COMPLETE ELECTRONIC .PDF VERSION OF THE PLAN ASSEMBLY.

ALL CURVES ARE TO BE SUPERELEVATED, TRANSITIONED AND WIDENED IN ACCORDANCE WITH STANDARD TC-5.11U, EXCEPT WHERE OTHERWISE NOTED.

THE ORIGINAL APPROVED TITLE SHEET(S), INCLUDING ORIGINAL SIGNATURES, ARE FILED IN THE VDOT CENTRAL OFFICE PLAN LIBRARY. ANY MISUSE OF ELECTRONIC FILES, INCLUDING SCANNED SIGNATURES, IS ILLEGAL AND ENFORCED TO THE FULL EXTENT OF THE LAW.

Population 84,858 (2010 Census)

STATE PROJECT NO.	SECTION	FEDERAL AID PROJECT NO.	TYPE CODE	UPC NO.	EQUALITIES FEET	LENGTH INCLUDING BRIDGE(S) FEET	LENGTH INCLUDING BRIDGE(S) MILES	LENGTH EXCLUDING BRIDGE(S) FEET	LENGTH EXCLUDING BRIDGE(S) MILES	BRIDGE PROJECT NO.	TYPE PROJECT	DESCRIPTION
0337-133-101	PE-102	STP-5A03 (185)	-	61407		2,339.51	0.44	2,339.51	0.44		PRELIM. ENG.	FROM 0.327 Mile E. of Shoulders Hill Road (Rte.626) TO 0.770 Mile E. of Shoulders Hill Road (Rte.626)
	RW-202	STP-5A03 (693)	-	61407		2,197.87	0.42	2,197.87	0.42		RIGHT-OF-WAY	FROM 0.37 Mile E. of Shoulders Hill Road (Rte.626) TO 0.786 Mile E. of Shoulders Hill Road (Rte.626)
	C-502	STP-5A03 (705)	1000	61407		2,339.51	0.44	2,339.51	0.44		CONSTRUCTION	FROM 0.327 Mile E. of Shoulders Hill Road (Rte.626) TO 0.770 Mile E. of Shoulders Hill Road (Rte.626)

Project Lengths are based on RTE. 337 Construction ℄.

TIER 2 PROJECT

LOCALLY ADMINISTERED PROJECTS	
CITY OF SUFFOLK	
SHERRY B. EARLEY, P.E.	
RECOMMENDED FOR APPROVAL FOR RIGHT OF WAY ACQUISITION	
	ENGINEERING MANAGER
DATE	TITLE OF POSITION
SHERRY B. EARLEY, P.E.	
RECOMMENDED FOR APPROVAL FOR CONSTRUCTION	
	ENGINEERING MANAGER
DATE	TITLE OF POSITION

RECOMMENDED FOR APPROVAL FOR RIGHT OF WAY ACQUISITION	
DATE	PROGRAMMING DIVISION DIRECTOR
DATE	STATE LOCATION AND DESIGN ENGINEER
DATE	CHIEF OF PLANNING AND PROGRAMMING
DATE	CHIEF ENGINEER

APPROVED FOR RIGHT OF WAY ACQUISITION	
DATE	CHIEF OF POLICY

RECOMMENDED FOR APPROVAL FOR CONSTRUCTION	
DATE	PROGRAMMING DIVISION DIRECTOR
DATE	STATE LOCATION AND DESIGN ENGINEER
DATE	STATE STRUCTURE AND BRIDGE ENGINEER
DATE	CHIEF OF PLANNING AND PROGRAMMING

APPROVED FOR CONSTRUCTION	
DATE	CHIEF ENGINEER

APPROVED	
DATE	DIVISION ADMINISTRATOR FEDERAL HIGHWAY ADMINISTRATION U.S. DEPARTMENT OF TRANSPORTATION

REVISED

Copyright 2014, Commonwealth of Virginia

DGN $REF001 $REF002 $REF003 $REF004 $REF005 $REF006
$DGNLEV $LEV001 $LEV002 $LEV003 $LEV004 $LEV005 $LEV006

PROJECT MANAGER Sherry Earley, P.E., City of Suffolk (757) 514-7703
SURVEYED BY PMI, INC. (757) 368-0945
DESIGN SUPERVISED BY Ira Johnston, P.E., Clark Nexsen (757) 455-5800
DESIGN BY Clark Nexsen (757) 455-5800

LOCATION MAP

REVISED	STATE	ROUTE	PROJECT	SHEET NO.
	VA.	337	0337-133-101, PE-102 RW-202, C-502	1A

DESIGN FEATURES RELATING TO CONSTRUCTION OR TO REGULATION AND CONTROL OF TRAFFIC MAY BE SUBJECT TO CHANGE AS DEEMED NECESSARY BY THE DEPARTMENT

VDOT (Division) or Co. Name (Location), Virginia (TECHNICAL DISCIPLINE)

VDOT (Division) or Co. Name (Location), Virginia (TECHNICAL DISCIPLINE)

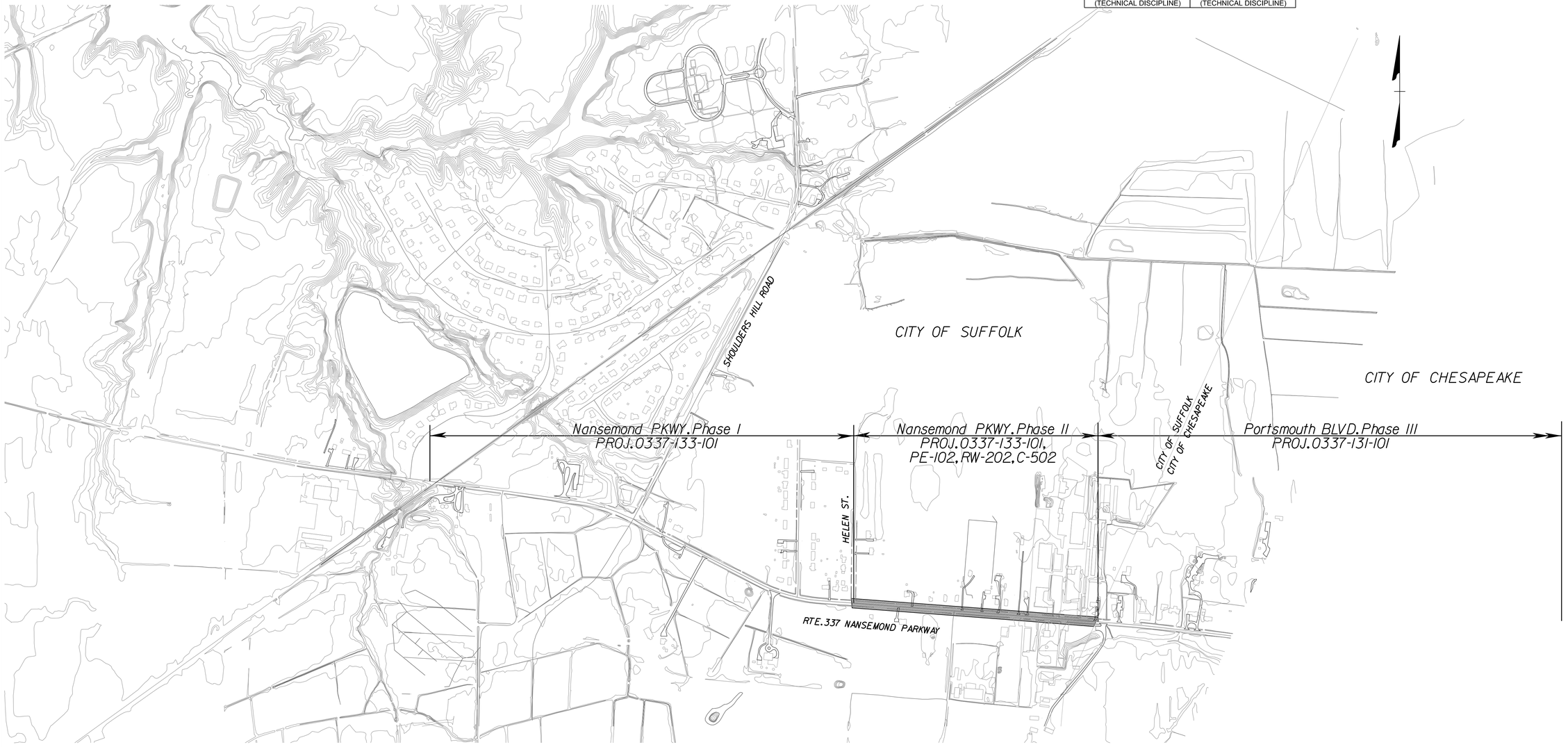

FINAL PLANS

SCALE
0 400 800

PROJECT	SHEET NO.
0337-133-101	1A

$TIME$STAMP$

d4146001a.dgn 5/20/2016 1:29:19 PM

PROJECT MANAGER Sherry Earley, P.E., City of Suffolk (757) 514-7703
SURVEYED BY EMJINC (757) 368-0945
DESIGN SUPERVISED BY Ira Johnston, P.E., Clark Nexsen (757) 455-5800
DESIGNED BY Clark Nexsen (757) 455-5800

INDEX OF SHEETS

SHEET NO.	DESCRIPTION	STATIONS
1	TITLE SHEET	
1A	LOCATION MAP	
1B	INDEX OF SHEETS	
1C	PRELIMINARY RIGHT OF WAY DATA SHEET	
1D	REVISION DATA SHEET	
1F-1F(3)	SURVEY ALIGNMENT DATA SHEET	
1G	CONSTRUCTION ALIGNMENT DATA SHEET	
1H	UNDERGROUND UTILITY TEST HOLE INFORMATION*	
1J(1)	TRANSPORTATION MANAGEMENT PLAN (TMP) TRAFFIC CONTROL GENERAL NOTES	
1J(2)-1J(4)	MAINTENANCE OF TRAFFIC AND SEQUENCE OF CONSTRUCTION PHASE 1	
1K(2)-1K(4)	MAINTENANCE OF TRAFFIC AND SEQUENCE OF CONSTRUCTION PHASE 2	
1L(2)-1L(4)	MAINTENANCE OF TRAFFIC AND SEQUENCE OF CONSTRUCTION PHASE 3	
2	GENERAL NOTES	
2A	TYPICAL SECTIONS	
2C	DRAINAGE DESCRIPTIONS	
2D	STORMWATER MANAGEMENT DETAILS	
2E	SUMMARY SHEETS*	
2F	ROADSIDE DEVELOPMENT SUMMARY	
2G	EROSION CONTROL DETAIL SHEET	
2H(1), 2H(2), 2H(3)	STORMWATER POLLUTION PREVENTION PLAN (SWPPP) GENERAL INFORMATION	
3, 3A	PLAN AND PROFILE	STA 8+27.87 to STA 14+00
4, 4A	PLAN AND PROFILE	STA 14+00 to STA 19+00
5, 5A	PLAN AND PROFILE	STA 19+00 to STA 24+00
6, 6A	PLAN AND PROFILE	STA 24+00 to STA 29+00
7, 7A	PLAN AND PROFILE	STA 29+00 to STA 31+67.38
8(1)	ENTRANCE PROFILES	
9(1)	PAVEMENT MARKING STANDARDS AND DETAILS	
9(3)	PAVEMENT MARKINGS, MARKER & SIGNING PLAN	STA 10+00 to STA 14+00
9(4)	PAVEMENT MARKINGS, MARKER & SIGNING PLAN	STA 14+00 to STA 19+00
9(5)	PAVEMENT MARKINGS, MARKER & SIGNING PLAN	STA 19+00 to STA 24+00
9(6)	PAVEMENT MARKINGS, MARKER & SIGNING PLAN	STA 24+00 to STA 29+00
9(7)	PAVEMENT MARKINGS, MARKER & SIGNING PLAN	STA 29+00 to STA 31+50
10(1), 10(1A), 10(1B)	UTILITY NOTES	
10(2), 10(2A), 10(2B)	UTILITY DETAILS	
10(3), 10(3A)	UTILITY PLAN & PROFILE	STA 10+00 to STA 14+00
10(4), 10(4A)	UTILITY PLAN & PROFILE	STA 14+00 to STA 19+00
10(5), 10(5A), 10(5B)	UTILITY PLAN & PROFILE	STA 19+00 to STA 24+00
10(6), 10(6A)	UTILITY PLAN & PROFILE	STA 24+00 to STA 29+00
10(7), 10(7A)	UTILITY PLAN & PROFILE	STA 29+00 to STA 31+50
11(1)	LIGHTING & LANDSCAPE ARCHITECTURE DETAILS	
11(3)	LIGHTING & LANDSCAPE ARCHITECTURE PLAN	STA 10+00 to STA 14+00
11(4)	LIGHTING & LANDSCAPE ARCHITECTURE PLAN	STA 14+00 to STA 19+00
11(5)	LIGHTING & LANDSCAPE ARCHITECTURE PLAN	STA 19+00 to STA 24+00
11(6)	LIGHTING & LANDSCAPE ARCHITECTURE PLAN	STA 24+00 to STA 29+00
11(7)	LIGHTING & LANDSCAPE ARCHITECTURE PLAN	STA 29+00 to STA 31+50

TOTAL CROSS SECTION SHEETS 23 (SEE CROSS SECTION SHEET NUMBER 1 FOR INDEX OF SHEETS)

VDOT (Division) or Co. Name (Location), Virginia (TECHNICAL DISCIPLINE)	VDOT (Division) or Co. Name (Location), Virginia (TECHNICAL DISCIPLINE)

REVISED	STATE	STATE ROUTE	STATE PROJECT	SHEET NO.
	VA.	337	0337-133-101, PE-102 RW-202, C-502	1B

DESIGN FEATURES RELATING TO CONSTRUCTION OR TO REGULATION AND CONTROL OF TRAFFIC MAY BE SUBJECT TO CHANGE AS DEEMED NECESSARY BY THE DEPARTMENT

FINAL PLANS

PROJECT MANAGER Sherry Earley, P.E., City of Suffolk (757) 514-7703
SURVEYED BY EWI, INC. (757) 368-0945
DESIGN SUPERVISED BY Ira Johnston, P.E., Clark Nexsen (757) 455-5800
DESIGNED BY Clark Nexsen (757) 455-5800

PRELIMINARY RIGHT OF WAY DATA SHEET

VDOT (Division) or Co. Name (Location), Virginia (TECHNICAL DISCIPLINE)

VDOT (Division) or Co. Name (Location), Virginia (TECHNICAL DISCIPLINE)

REVISED	STATE	STATE ROUTE	STATE PROJECT	SHEET NO.
	VA.	337	0337-133-101, PE-102 RW-202, C-502	1C

DESIGN FEATURES RELATING TO CONSTRUCTION OR TO REGULATION AND CONTROL OF TRAFFIC MAY BE SUBJECT TO CHANGE AS DEEMED NECESSARY BY THE DEPARTMENT

City/County: CITY OF SUFFOLK

UPC No.: 61407

PARCEL NO.	LANDOWNER	SHEET NO.	AREA														
			TOTAL	FEE TAKING		PRESCRIPTIVE R/W		FEE REMAINDER		EASEMENTS							
										PERMANENT		UTILITY		TEMPORARY		PROFFERS
			ACRES OR SQUARE FEET	ACRES OR SQ. FEET	HECTARES/ OR SQ. METERS	ACRES OR SQ. FEET	HECTARES/ OR SQ. METERS	ACRES OR SQ. FEET	HECTARES/ OR SQ. METERS	ACRES OR SQ. FEET	HECTARES/ OR SQ. METERS	ACRES OR SQ. FEET	HECTARES/ OR SQ. METERS	ACRES OR SQ. FEET	HECTARES/ OR SQ. METERS	YES / NO
002	C.K. McQUEEN, LLC	3	0.090 Ac.	0 Ac.				0.090 Ac.				0.011 Ac.		0.004 Ac.		
003	CSH HOLDINGS, LLC	3	5.100 Ac.	0.097 Ac.				5.003 Ac.				0.160 Ac.		0.053 Ac.		
004	CSH HOLDINGS, LLC	3	0.250 Ac.	0.039 Ac.				0.211 Ac.				0.052 Ac.		0.021 Ac.		
005	HARRIETT BEECHER HURDLE	3,4	1.150 Ac.	0.130 Ac.				1.020 Ac.		0.004 Ac.		0.174 Ac.		0.056 Ac.		
006	CITY OF SUFFOLK	3	0.300 Ac.	0.012 Ac.				0.288 Ac.				0.014 Ac.		0.014 Ac.		
007	BARBARA A. PARKER, TRUSTEE OF THE BARBARA A. PARKER REVOCABLE TRUST	3	0.410 Ac.	0.056 Ac.				0.354 Ac.				0.017 Ac.		0.017 Ac.		
008	BARBARA A. PARKER, TRUSTEE OF THE BARBARA A. PARKER REVOCABLE TRUST	3	0.360 Ac.	0.055 Ac.				0.305 Ac.				0.018 Ac.		0.018 Ac.		
009	MARGARET TROTTER DAVIS, CAROLYN VEAL-WIGGINS AND RICKY LEE VEAL	3,4	5.600 Ac.	0.101 Ac.				5.499 Ac.		0.001 Ac.		0.032 Ac.		0.031 Ac.		
010	CYNTHIA H. SKINNER & DAVID L. SKINNER	4	1.000 Ac.	0.054 Ac.				0.946 Ac.		0.024 Ac.		0.072 Ac.		0.054 Ac.		
011	ROGER NEAL ISAAC	4	1.000 Ac.	0.054 Ac.				0.946 Ac.		0.037 Ac.		0.072 Ac.		0.001 Ac.		
012	T.R.I. A GENERAL PARTNERSHIP	4,5	5.650 Ac.	1.785 Ac.				3.865 Ac.				0.419 Ac.		0.000 Ac.		
013	ELLA DABNEY BYNUM	4	5.100 Ac.	0.099 Ac.				5.001 Ac.		0.000 Ac.		0.037 Ac.		0.037 Ac.		
014	TOAN VAN NGUYEN JR. & NINA UYEN NGUYEN	4	1.300 Ac.	0.022 Ac.				1.278 Ac.		0.003 Ac.		0.011 Ac.		0.011 Ac.		
015	TOAN VAN NGUYEN JR. & NINA UYEN NGUYEN	4	1.300 Ac.	0.025 Ac.				1.275 Ac.		0.000 Ac.		0.012 Ac.		0.016 Ac.		
016	OWENS FAMILY II, LLC	4	2.600 Ac.	0.029 Ac.				2.571 Ac.		0.003 Ac.		0.014 Ac.		0.020 Ac.		
017	VELMA T. HURDLE, SAMUEL ROSS MILLS, JR., DARWIN MILLS, ASHLEY MARY BANKS HURD, ARINNE VICTORIA BANKS AND AMANDA ELIZABETH BANKS	4	2.630 Ac.	0.038 Ac.				2.592 Ac.		0.003 Ac.		0.025 Ac.		0.021 Ac.		
018	ALVIN M. VANN, SR., BARBARA L. HARRELL, CONNIE L. JORDAN AND MARVIN L. VANN, SR.	4,5	2.630 Ac.	0.038 Ac.				2.592 Ac.		0.0008 Ac.		0.025 Ac.		0.020 Ac.		
019	PAUL A. M. GOTTLIEB & CAROLYN P. GOTTLIEB	5,6	3.600 Ac.	0.101 Ac.				3.499 Ac.		0.007 Ac.		0.138 Ac.		0.047 Ac.		
020	UNION BAPTIST MISSIONARY CHURCH	5	5.300 Ac.	0.114 Ac.				5.186 Ac.		0.001 Ac.		0.045 Ac.		0.056 Ac.		
021	ROSETTA GRAY McCLELLAN	5	0.390 Ac.	0.061 Ac.				0.329 Ac.		0.002 Ac.		0.026 Ac.		0.020 Ac.		
022	COLLETTE G. HUNT	5	1.500 Ac.	0.055 Ac.				1.445 Ac.		0.005 Ac.		0.021 Ac.		0.022 Ac.		
023	JOHN B. HADDER, III	5	2.690 Ac.	0.045 Ac.				2.645 Ac.		0.005 Ac.		0.023 Ac.		0.015 Ac.		
024	BENJAMIN F. KENNEDY & EMMA R. KENNEDY	5	2.700 Ac.	0.038 Ac.				2.662 Ac.		0.010 Ac.		0.033 Ac.		0.009 Ac.		
025	LEON E. HARPER, ET ALS	5, 6	2.180 Ac.	0.031 Ac.				2.149 Ac.		0.002 Ac.		0.028 Ac.		0.015 Ac.		
026	THE JONES FAMILY, L.C.	6	1.600 Ac.	0.049 Ac.				1.551 Ac.				0.069 Ac.		0.035 Ac.		
027	BARBARA W. BASS	6	1.500 Ac.	0.086 Ac.				1.414 Ac.		0.003 Ac.		0.123 Ac.		0.048 Ac.		
028	NANSEMOND AUTO BODY, INC.	6	0.720 Ac.	0.029 Ac.				0.691 Ac.				0.041 Ac.		0.019 Ac.		
029	NANSEMOND AUTO BODY, INC.	6,7	2.040 Ac.	0.129 Ac.				1.911 Ac.		0.003 Ac.		0.190 Ac.		0.160 Ac.		
030	NORMAN T. EVERETT & BARBARA L. EVERETT	6	2.860 Ac.	0.100 Ac.				2.760 Ac.		0.013 Ac.		0.093 Ac.		0.056 Ac.		
032	R. G. ENTERPRISES, L.C.	6	0.120 Ac.	0.020 Ac.				0.100 Ac.		0.018 Ac.		0.018 Ac.		0.015 Ac.		
033	R. G. ENTERPRISES, L.C.	6	4.520 Ac.	0.089 Ac.				4.431 Ac.		0.080 Ac.		0.080 Ac.		0.067 Ac.		
034	FBV, LLC	6,7	6.870 Ac.	0.031 Ac.				6.839 Ac.		0.028 Ac.		0.028 Ac.		0.021 Ac.		
035	BEHRENDS PROPERTY MANAGEMENT, INC.	7	15.830 Ac.	0.126 Ac.				15.704 Ac.		0.031 Ac.		0.137 Ac.		0.051 Ac.		
036	EDITH I. PERSON A/K/A EDYTHE I. PERSON	7	0.670 Ac.	0.053 Ac.				0.617 Ac.		0.013 Ac.		0.046 Ac.		0.024 Ac.		
038	RICHLAND TOWERS MANAGEMENT NORFOLK, LLC	4	50.460 Ac.	0.026 Ac.				50.434 Ac.		0.017 Ac.		0.034 Ac.		0.016 Ac.		

FINAL PLANS

PROJECT	SHEET NO.
0337-133-101	1C

DGN $REF001 $REF002 $REF003 $REF004 $REF005 $REF006
$DGNLEV $LEV001 $LEV002 $LEV003 $LEV004 $LEV005 $LEV006

PROJECT MANAGER Sterry Earley, P.E., City of Suffolk (757) 514-7703
SURVEYED BY PMI, INC. (757) 368-0945
DESIGN SUPERVISED BY Ira Johnston, P.E., Clark Nexsen (757) 455-5800
DESIGNED BY Clark Nexsen (757) 455-5800

REVISION DATA SHEET

REVISED	STATE	ROUTE	PROJECT	SHEET NO.
	VA.	337	0337-133-101, PE-102 RW-202, C-502	1B

State Project: 0337-133-101, PE-102, RW-202, C-502
Federal Project: STP-5A03( )
From: 0.327 MILE E OF SHOULDERS HILL ROAD (RTE.626)
To: 0.770 MILE E OF SHOULDERS HILL ROAD (RTE.626)
UPC Number: 00000

DESIGN FEATURES RELATING TO CONSTRUCTION OR TO REGULATION AND CONTROL OF TRAFFIC MAY BE SUBJECT TO CHANGE AS DEEMED NECESSARY BY THE DEPARTMENT

VDOT (Division) or Co. Name (Location), Virginia (TECHNICAL DISCIPLINE)	VDOT (Division) or Co. Name (Location), Virginia (TECHNICAL DISCIPLINE)

FINAL PLANS

PROJECT	SHEET NO.
0337-133-101	1B

$TIME$STAMP$

d4146001d.dgn 5/20/2016 1:29:20 PM

Note: To Convert Va. State Plane Coordinates NAD 83 Metric Values to Va. D. O. T. Project Coordinates.
1. Reduce the Eastings 2.5 Million Meters and the South and North Zone Northings by 1 and 2 Million Respectively.
2. Multiply by the U. S. Survey Foot (3.28083333333).
3. Multiply These Values by the Combined Scale and Elevation Factor (1.0000) for this County.
A Reverse of this Procedure will Transform VDOT Project Coordinates to NAD 83 Values.

DESIGN FEATURES RELATING TO CONSTRUCTION OR TO REGULATION AND CONTROL OF TRAFFIC MAY BE SUBJECT TO CHANGE AS DEEMED NECESSARY BY THE DEPARTMENT

REVISED	FHWA REGION	STATE	FEDERAL AID PROJECT	STATE ROUTE	STATE PROJECT	SHEET NO.
	3	VA.		337	0337-133-101, PE-102 RW-202, C-502	1F

SURVEY ALIGNMENT DATA SHEET

SURVEY ALIGNMENTS

POINT ID	STATION	BEARING	COORDINATE	VALUES
900	10+00.00		182,790.57	3,876,633.53
		S 81°26'32" E		
901	14+57.33		182,722.52	3,877,085.77
		S 86°06'20" E		
902	19+37.35		182,689.92	3,877,564.68
		S 85°37'05" E		
903	23+95.28		182,654.93	3,878,021.27
		S 84°51'02" E		
904	29+13.87		182,608.39	3,878,537.77
		S 85°37'20" E		
905	33+28.31		182,576.75	3,878,951.00
		S 84°40'10" E		
906	37+01.58		182,542.07	3,879,322.65

Route : Nansemond Parkway
Project : 0337-133-101, PE-102
District : HAMPTON ROADS
County : City of Suffolk
From : HELEN STREET
To : SUFFOLK / CHESAPEAKE CITY LINE
Horizontal Datum Based On Virginia Project Coordinates
Vertical Datum Based On NAVD 88
Survey By : , , PRECISION MEASUREMENTS
Operator : , , SUFFOLK/CHESAPEAKE CITY LINE
Date : July 2012
Scale : 1" = 25'
PPMS* : 61407

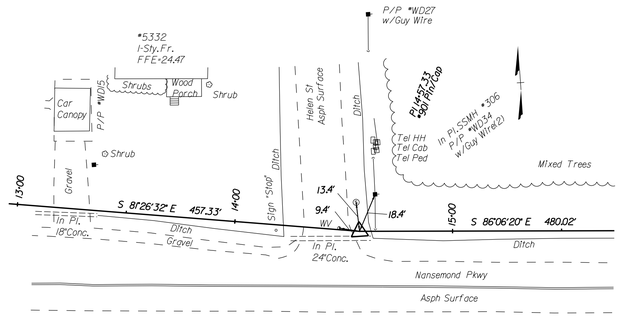

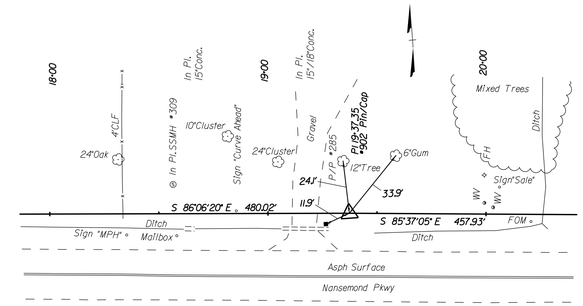

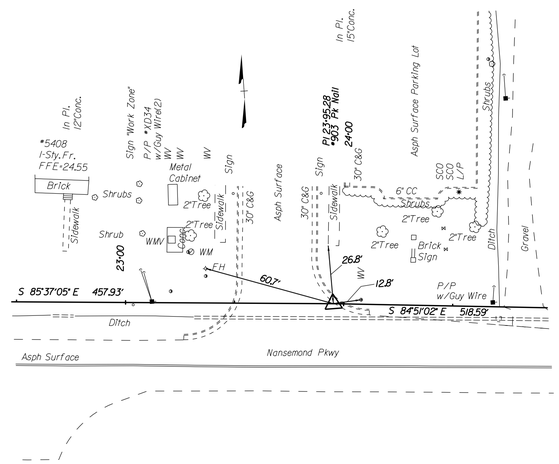

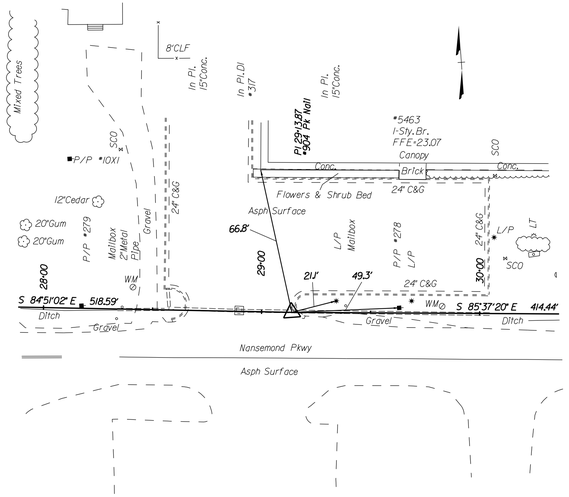

FINAL PLANS

SUPERVISED BY
DESIGNED BY
CADD OPERATOR$$DESIGN$FILE$SPECIFICATION$$
REVISED BY

$TIME$STAMP$

PLAN	SURVEYED		BY	DATE
NOTE BOOK	PLOTTED			
NO.	ALIGNMENT CHECKED			
	RIGHT OF WAY CHECKED			

PLAN NO.	PROJECT	FILE NO.	SHEET NO.
A		0337-133-101	1F

d4146001f.dgn 5/20/2016 1:40:50 PM

Note: To Convert Va. State Plane Coordinates NAD 83 Metric Values to Va. D. O. T. Project Coordinates.
1. Reduce the Eastings 2.5 Million Meters and the South and North Zone Northings by 1 and 2 Million Respectively.
2. Multiply by the U. S. Survey Foot (3.28083333333).
3. Multiply These Values by the Combined Scale and Elevation Factor (1.0000) for this County.
A Reverse of this Procedure will Transform VDOT Project Coordinates to NAD 83 Values.

DESIGN FEATURES RELATING TO CONSTRUCTION OR TO REGULATION AND CONTROL OF TRAFFIC MAY BE SUBJECT TO CHANGE AS DEEMED NECESSARY BY THE DEPARTMENT

REVISED	FHWA REGION	STATE	FEDERAL AID PROJECT	STATE ROUTE	STATE PROJECT	SHEET NO.
	3	VA.		337	0337-133-101, PE-102 RW-202, C-502	IF(1)

SURVEY ALIGNMENT DATA SHEET

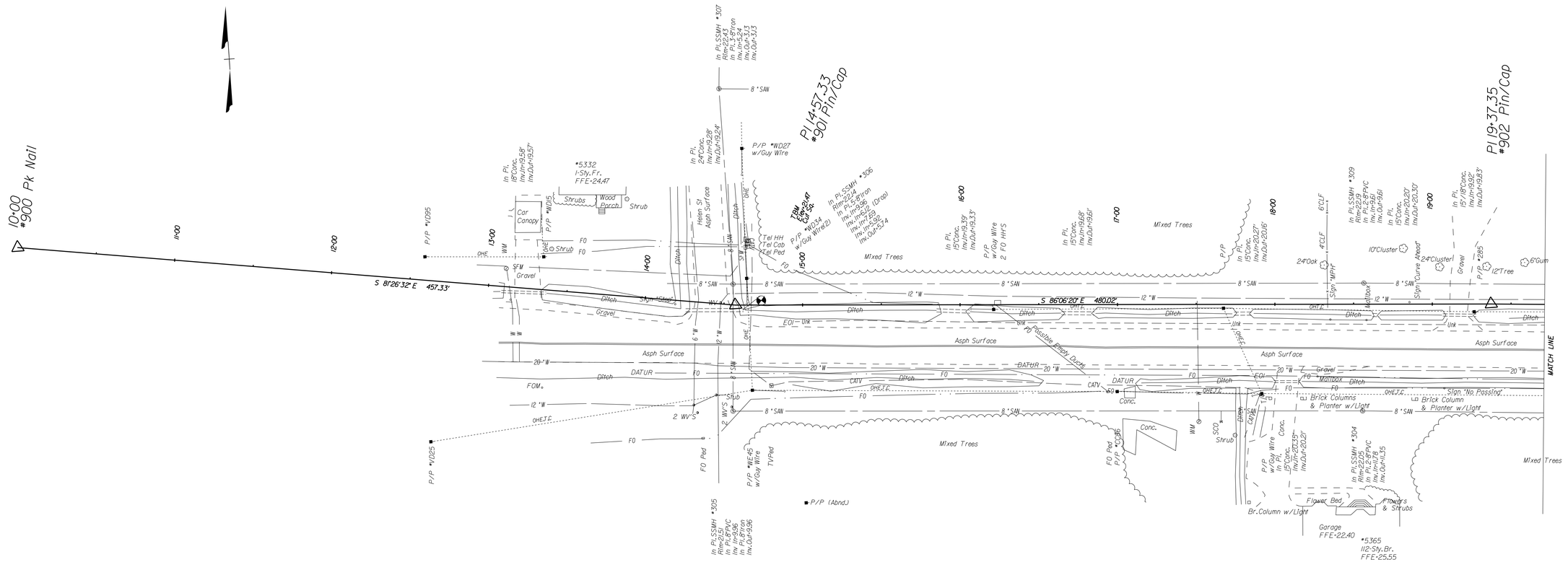

FINAL PLANS

SUPERVISED BY
DESIGNED BY
CADD OPERATOR
REVISED BY

PLAN	SURVEYED	BY	DATE
NOTE BOOK	PLOTTED		
NO.	ALIGNMENT CHECKED		
	RIGHT OF WAY CHECKED		

$TIME$ST.MM/$

PLAN NO.	PROJECT	FILE NO.	SHEET NO.
A		0337-133-101	IF(1)

d4146001f(1).dgn 5/20/2016 1:29:21 PM

Note: To Convert Va. State Plane Coordinates NAD 83 Metric Values to Va. D. O. T. Project Coordinates.
1. Reduce the Eastings 2.5 Million Meters and the South and North Zone Northings by 1 and 2 Million Respectively.
2. Multiply by the U. S. Survey Foot (3.28083333333).
3. Multiply These Values by the Combined Scale and Elevation Factor (1.0000) for this County.
A Reverse of this Procedure will Transform VDOT Project Coordinates to NAD 83 Values.

DESIGN FEATURES RELATING TO CONSTRUCTION OR TO REGULATION AND CONTROL OF TRAFFIC MAY BE SUBJECT TO CHANGE AS DEEMED NECESSARY BY THE DEPARTMENT

REVISED	FHWA REGION	STATE	FEDERAL AID PROJECT	STATE ROUTE	STATE PROJECT	SHEET NO.
	3	VA.		337	0337-133-101, PE-102 RW-202, C-502	IF(2)

SURVEY ALIGNMENT DATA SHEET

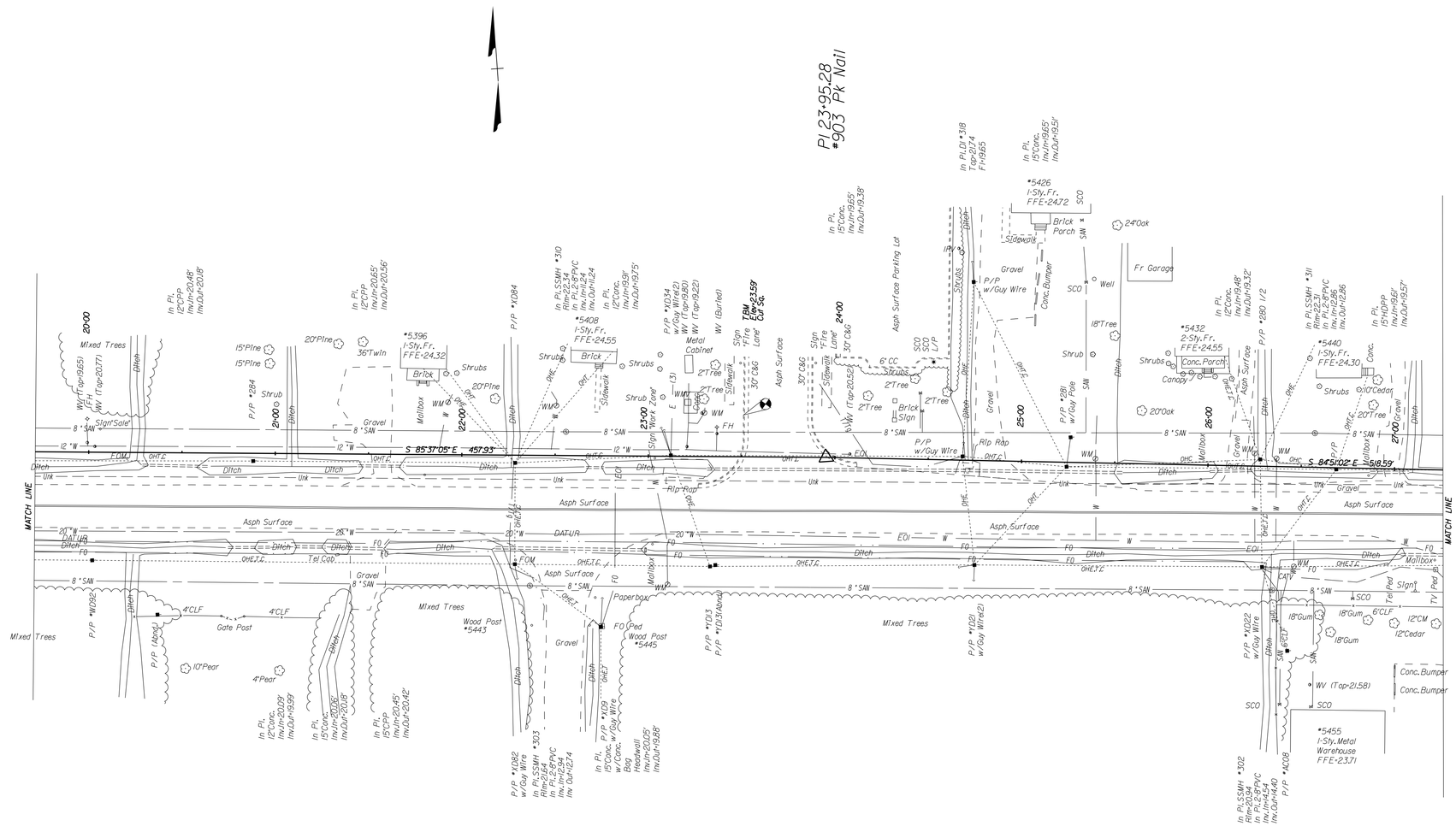

FINAL PLANS

SUPERVISED BY
DESIGNED BY
CADD OPERATOR
REVISED BY

PLAN	SURVEYED	BY	DATE
NOTE BOOK	PLOTTED		
NO.	ALIGNMENT CHECKED		
	RIGHT OF WAY CHECKED		

$TIME$STAMP$

PLAN NO.	PROJECT	FILE NO.	SHEET NO.
A		0337-133-101	IF(2)

d4146001f(2).dgn 5/20/2016 1:29:21 PM

Note: To Convert Va. State Plane Coordinates NAD 83 Metric Values to Va. D. O. T. Project Coordinates.
1. Reduce the Eastings 2.5 Million Meters and the South and North Zone Northings by 1 and 2 Million Respectively.
2. Multiply by the U. S. Survey Foot (3.28083333333).
3. Multiply These Values by the Combined Scale and Elevation Factor (1.0000) for this County.
A Reverse of this Procedure will Transform VDOT Project Coordinates to NAD 83 Values.

DESIGN FEATURES RELATING TO CONSTRUCTION OR TO REGULATION AND CONTROL OF TRAFFIC MAY BE SUBJECT TO CHANGE AS DEEMED NECESSARY BY THE DEPARTMENT

REVISED	FHWA REGION	STATE	FEDERAL AID PROJECT	STATE ROUTE	STATE PROJECT	SHEET NO.
	3	VA.		337	0337-133-101, PE-102 RW-202, C-502	1F(3)

SURVEY ALIGNMENT DATA SHEET

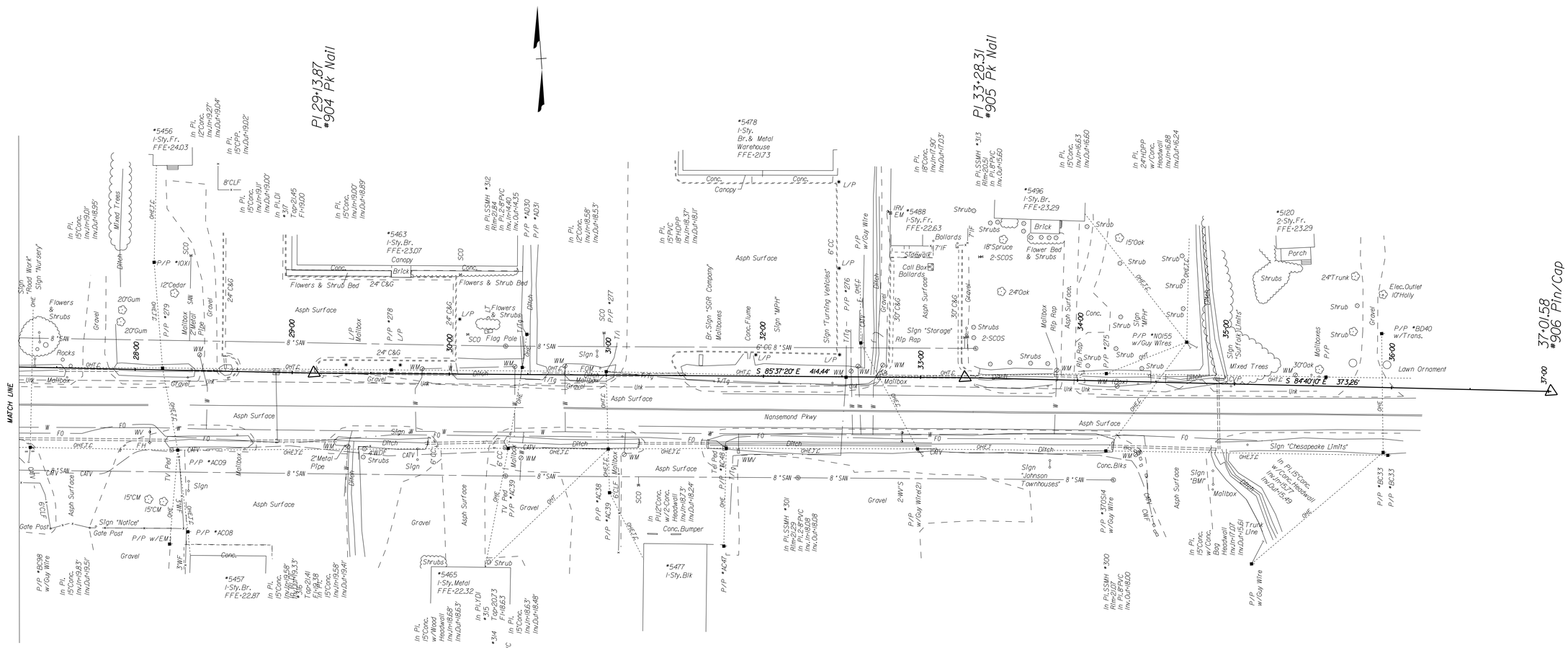

FINAL PLANS

SUPERVISED BY
DESIGNED BY
CADD OPERATOR
REVISED BY

PLAN	SURVEYED		BY
NOTE BOOK	PLATS	ALIGNMENT CHECKED	
NO.		RIGHT OF WAY CHECKED	

$TIME$STAMP$

PLAN NO.	PROJECT	FILE NO.	SHEET NO.
A		0337-133-101	1F(3)

d4146001f(3).dgn 5/20/2016 1:29:21 PM

PROJECT MANAGER Sherry Earley, P.E., City of Suffolk (757) 514-7703
SURVEYED BY EMJINC (757) 368-0945
DESIGN SUPERVISED BY Ian Johnston, P.E., Clark Nexsen (757) 455-5800
DESIGNED BY Clark Nexsen (757) 455-5800

REVISED	STATE	ROUTE	PROJECT	SHEET NO.
	VA.	337	0337-133-101, PE-102 RW-202, C-502	1G

DESIGN FEATURES RELATING TO CONSTRUCTION OR TO REGULATION AND CONTROL OF TRAFFIC MAY BE SUBJECT TO CHANGE AS DEEMED NECESSARY BY THE DEPARTMENT

VDOT (Division) or Co. Name (Location), Virginia (TECHNICAL DISCIPLINE)	VDOT (Division) or Co. Name (Location), Virginia (TECHNICAL DISCIPLINE)

CONSTRUCTION ALIGNMENT DATA SHEET

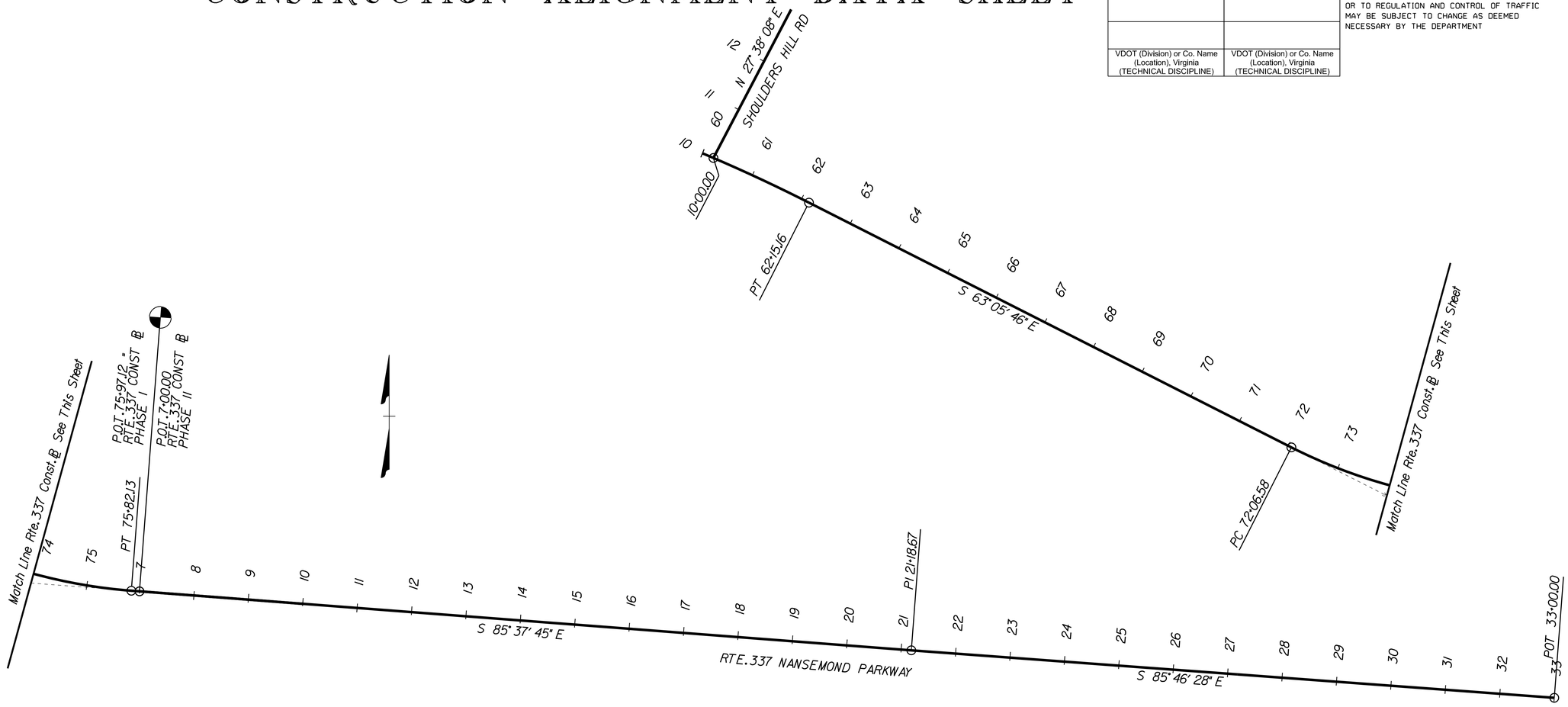

ALIGNMENT DATA

HORIZONTAL ALIGNMENT LIST
FOR ROADWAY RTE 337 CONST PHASE I

P.J.				NORTH (Y)	EAST (X)
1	50+00.00	POT		183,597.6700	3,874,299.23
			S 82°33' 18.34" E PI/PI= 196.29 FT.		
2	57+10.68	PI		183,505.5863	3,875,003.9213
			S 63°05' 46.40" E PI/PI= 991.42 FT.		
3	73+96.81	PI		182,738.1382	3,876,516.3970
			S 85°37' 44.80" E PI/PI= 317.87 FT.		
4	75+97.12	POT		182,722.4977	3,876,721.0237

HORIZONTAL ALIGNMENT LIST
FOR ROADWAY RTE 337 CONST PHASE II

P.J.				NORTH (Y)	EAST (X)
1	7+00.00	POT		182722.4977	3876721.0237
			S 85°37'45" E PI/PI= 1,418.67 FT.		
2	21+18.67	PI		182614.3781	3878135.5725
			S 85°46'28" E PI/PI= 1,181.33 FT.		
3	33+00.00	POT		182527.3339	3879313.6865

FINAL PLANS

SCALE
0 100 200

PROJECT	SHEET NO.
0337-133-101	1G

$TIME$STAMP$

DGN $REF001 $REF002 $REF003 $REF004 $REF005 $REF006
$DGNLEV $LEV001 $LEV002 $LEV003 $LEV004 $LEV005 $LEV006

PROJECT MANAGER Sherry Earley, P.E., City of Suffolk (757) 514-7703
SURVEYED BY EMJINC (757) 368-0945
DESIGN SUPERVISED BY Ina Johnston, P.E., Clark Nexsen (757) 455-5800
DESIGNED BY Clark Nexsen (757) 455-5800

REVISED	STATE	STATE ROUTE	STATE PROJECT	SHEET NO.
	VA.	337	0337-133-101, PE-102 RW-202, C-502	IH

DESIGN FEATURES RELATING TO CONSTRUCTION OR TO REGULATION AND CONTROL OF TRAFFIC MAY BE SUBJECT TO CHANGE AS DEEMED NECESSARY BY THE DEPARTMENT

VDOT (Division) or Co. Name (Location), Virginia (TECHNICAL DISCIPLINE)

UNDERGROUND UTILITIES TEST HOLE INFORMATION

PLAN SHEET	TEST HOLE	DISTANCE (FEET)	(1) STATION & ROADWAY	OWNER	TYPE OF FACILITY	(2) ELEV. (FEET)	(3) CONFLICT YES/NO	(4) REMARKS	UTILITY (5) ADJUSTMENT REQUIRED
3	1	11.12 RT	13+52.9	PW	20" CAST IRON	2.53	YES	PORTSMOUTH WATERLINE	YES
4	2	18.71 LT	15+86.3	UNK	2" TELEPHONE	2.51	YES	DIRECT BURIED TELEPHONE LINE	YES
4	3	10.65 RT	15+86.3	PW	20" CAST IRON	3.84	NO	PORTSMOUTH WATERLINE	NO
5	4	11.00 RT	20+39.6	PW	20" CAST IRON	2.94	NO	PORTSMOUTH WATERLINE	NO
5	5	15.36 RT	20+39.6	UNK	1' FIBER OPTIC	2.36	YES	DIRECT BURIED FIBER OPTIC	YES
5	6	18.43 LT	22+03.2	UNK	2' TELEPHONE	3.39	YES	DIRECT BURIED TELEPHONE LINE	YES
5	7	12.60 RT	22+03.2	PW	20" CAST IRON	3.38	NO	PORTSMOUTH WATERLINE	NO
5	8	25.70 RT	22+03.2	UNK	2" FIBER OPTIC	4.51	YES	2" PLASTIC CONDUIT	YES
5	9	11.62 RT	23+31.1	PW	20" CAST IRON	3.20	NO	PORTSMOUTH WATERLINE	NO
3	10	15.89 RT	27+78.9	UNK	2 - 1/4" TELEPHONE	1.14	YES	DIRECT BURIED TELEPHONE LINE	YES
3	11	13.83 RT	27+78.9	PW	20" CAST IRON	3.77	NO	PORTSMOUTH WATERLINE	NO
3	12	13.45 RT	30+42.8	PW	20" CAST IRON	6.70	NO	PORTSMOUTH WATERLINE	NO

PW = PORTSMOUTH WATERWORKS

PLAN SHEETS	TEST HOLES	DISTANCE (FEET)	(1) STATION & ROADWAY	OWNER	TYPE OF FACILITY	(2) ELEV. (FEET)	(3) CONFLICT YES/NO	(4) REMARKS	UTILITY (5) ADJUSTMENT REQUIRED

LEGEND

W
T/Tg Duct
SFM
G

NOTES:

(1) ALL TEST HOLES ARE REFERENCED FROM THE SURVEY BASELINE UNLESS OTHERWISE NOTED.

(2) ELEVATIONS SHOWN HEREON ARE TO THE TOP OF THE FACILITY UNLESS OTHERWISE NOTED.

(3) YES OR NO: NO INDICATES NO DIRECT CONFLICT, HOWEVER, CLEARANCE MAY BE LESS THAN ACCEPTABLE TO UTILITY OWNER.

(4) REMARKS TO INCLUDE CLEARANCE DIMENSION (REGARDLESS OF DISTANCE).

(5) YES OR NO: INFORMATION TO BE PROVIDED BY THE VDOT DISTRICT UTILITY ENGINEER.

FINAL PLANS

PROJECT	SHEET NO.
0337-133-101	IH

$TIME$STAMP$

d1146001h.dgn 5/20/2016 1:29:22 PM

PROJECT MANAGER Sherry Earley P.E. City of Suffolk (757)514-7703
SURVEYED BY EMI INC. (757)368-0945
DESIGN SUPERVISED BY Ina Johnston P.E. Clark Nexsen (757)455-5800
DESIGNED BY Clark Nexsen (757)455-5800

TRANSPORTATION MANAGEMENT PLAN (TMP)
TRAFFIC CONTROL GENERAL NOTES

VDOT (Division) or Co. Name (Location), Virginia (TECHNICAL DISCIPLINE)	VDOT (Division) or Co. Name (Location), Virginia (TECHNICAL DISCIPLINE)

REVISED	STATE	STATE ROUTE	STATE PROJECT	SHEET NO.
	VA.	337	0337-133-101, PE-102 RW-202, C-502	1J(1)

DESIGN FEATURES RELATING TO CONSTRUCTION OR TO REGULATION AND CONTROL OF TRAFFIC MAY BE SUBJECT TO CHANGE AS DEEMED NECESSARY BY THE DEPARTMENT

TRAFFIC CONTROL GENERAL NOTES

1. THE CONTRACTOR SHALL BE RESPONSIBLE FOR ALL WORK ZONE SIGNING, DELINEATING PAVEMENT MARKINGS AND OTHER TRAFFIC CONTROL DEVICES NECESSARY TO PERFORM THE WORK. UPON COMPLETION OF THE WORK THE CONTRACTOR SHALL IMMEDIATELY REMOVE ALL SUCH TEMPORARY DEVICES.

2. ALL TRAFFIC MAINTENANCE AND CONTROL DEVICES, METHODS AND APPLICATIONS WILL CONFORM TO THE APPLICABLE PUBLICATIONS INCLUDING ALL CURRENT EDITIONS AND REVISIONS:
   2009 MANUAL ON UNIFORM TRAFFIC CONTROL DEVICES FOR STREETS AND HIGHWAYS (MUTCD)
   2011 VIRGINIA SUPPLEMENT TO THE MUTCD
   2008 VIRGINIA DEPARTMENT OF TRANSPORTATION ROAD AND BRIDGE STANDARDS, VOL. II
   2007 VIRGINIA DEPARTMENT OF TRANSPORTATION ROAD AND BRIDGE SPECIFICATIONS
   2011 VIRGINIA DEPARTMENT OF TRANSPORTATION WORK AREA PROTECTION MANUAL
   CITY OF CHESAPEAKE, PUBLIC WORKS SPECIFICATIONS AND STANDARDS MANUAL

3. CONTRACTOR SHALL MAINTAIN 1 LANE OF TRAFFIC IN EACH DIRECTION BETWEEN 5 AM AND 9 PM
   LANE CLOSURES: MONDAY THROUGH FRIDAY: PERMITTED 9:00 PM TO 5:00 AM
   SATURDAY AND SUNDAY: PERMITTED 7:00 AM TO 7:00 PM
   HOLIDAYS: NOT PERMITTED (SEE HOLIDAY LIST THIS SHEET)

   WHEN ONE LANE IN EACH DIRECTION CANNOT BE PROVIDED ON NANSEMOND PARKWAY, THEN THE WORK SHALL BE DONE BETWEEN THE HOURS OF 9:00 PM AND 5:00 AM

   EXTENDED WORK HOURS AND WORK DAYS MAY BE REQUESTED WITH A WRITTEN REQUEST TO THE OWNER. THIS REQUEST MUST BE SUBMITTED AT LEAST FIVE (5) WORKING DAYS PRIOR TO THE EXTENDED WORK PERIODS.

   THE OWNER RESERVES THE RIGHT TO MODIFY THE WORK HOUR RESTRICTIONS.

4. TRAFFIC CONTROL PLANS ARE INCLUDED IN THE CONSTRUCTION PLANS FOR THE REFERENCED PROJECT; HOWEVER, FIELD CONDITIONS MAY REQUIRE AMENDMENTS AND MODIFICATIONS. IF THE CONTRACTOR FEELS THAT THE TRAFFIC CONTROL PLAN(S) INCLUDED WITH THIS PROJECT DOES NOT SUIT CONDITIONS AT A WORK SITE, THEN THE CONTRACTOR SHALL SUBMIT TO THE OWNER A REVISED PLAN TO MAINTAIN TRAFFIC. THE REVISED PLAN SHALL INCLUDE SITE SPECIFIC TRAFFIC DETAILS AND SHALL IDENTIFY THE SEQUENCE OF CONSTRUCTION. THE CONTRACTOR WILL SUBMIT THE REVISED TRAFFIC CONTROL PLAN(S) A MINIMUM OF 10 CALENDAR DAYS PRIOR TO THE START OF WORK. THE CONTRACTOR WILL NOT DISRUPT TRAFFIC PATTERNS UNTIL THE OWNER HAS APPROVED THE REVISED TRAFFIC CONTROL PLAN. THE OWNER RESERVES THE RIGHT TO MODIFY ANY TRAFFIC CONTROL PLAN(S) AS NECESSARY IN THE INTEREST OF PUBLIC SAFETY OR TRAFFIC EFFICIENCY. IT IS THE CONTRACTOR'S RESPONSIBILITY TO INSURE THAT ALL REQUIREMENTS HAVE BEEN MET AND THAT ALL TRAFFIC CONTROL DEVICES HAVE BEEN INSTALLED ACCORDING TO THE APPROVED TRAFFIC CONTROL PLAN(S).

5. THE CONTRACTOR SHALL CHECK ALL TRAFFIC MAINTENANCE AND CONTROL DEVICES AND WORK ZONES BEFORE, DURING, AND AFTER EACH WORK DAY TO ENSURE PROPER OPERATION. ON WEEKENDS, HOLIDAYS, OR ANY NON-WORKING DAY, THE CONTRACTOR SHALL BE RESPONSIBLE FOR CHECKING THE TRAFFIC MAINTENANCE AND CONTROL DEVICES DAILY FOR PROPER OPERATION.

6. ACCESS AND ADEQUATE SIGHT DISTANCE TO AND FROM PROPERTIES SHALL BE MAINTAINED AT ALL TIMES. VEHICULAR ACCESS TO AND FROM PROPERTIES SHALL BE MAINTAINED AT ALL TIMES UNTIL CONSTRUCTION OF PROPOSED PRIVATE ENTRANCE IS REQUIRED. PRIVATE ENTRANCE CONSTRUCTION SHALL BE COORDINATED WITH PROPERTY OWNER AND TEMPORARY PARKING SHALL BE PROVIDED IF IT IS REQUIRED.

7. IF THERE IS AN APPROVAL FROM THE OWNER FOR A LANE CLOSURE, ALL LANES OF TRAFFIC WILL BE REOPENED TO TRAFFIC AT THE CONCLUSION OF EACH CONSTRUCTION DAY.

8. IN ALL CASES IN WHICH EXISTING OR ESTABLISHED TRAFFIC PATTERNS WILL BE DISRUPTED, THE CONTRACTOR WILL NOTIFY ALL AFFECTED RESIDENTS AND/OR BUSINESSES A MINIMUM OF 48 HOURS IN ADVANCE OF THE ANTICIPATED DISRUPTION BY DISTRIBUTING DOOR-TO-DOOR NOTICES. A COPY OF THE NOTICE SHALL BE FORWARDED TO THE OWNER FOR REVIEW AND APPROVAL PRIOR TO BEGINNING WORK.

9. AT NIGHT OR DURING NON-CONSTRUCTION HOURS, ALL EXCAVATED AREAS ARE TO BE BACK FILLED OR SECURED AND PROTECTED BY USING APPROVED SAFETY DEVICES OR MATERIALS.

10. NOT USED

11. WHEN THE USE OF TYPE III BARRICADES IS REQUIRED (DAY OR NIGHT), ALL BARRICADES WILL BE EQUIPPED WITH TYPE A HIGH-INTENSITY FLASHING WARNING LIGHTS.

12. WHERE PARKING AREAS WILL BE ILLUMINATED, ALL SOURCES OF ILLUMINATION MUST BE SHIELDED TO PREVENT ANY DIRECT REFLECTION TOWARDS RESIDENTIAL AREAS AND CITY OF CHESAPEAKE STREETS.

13. ALL PERMANENT STRIPING IN THE PUBLIC RIGHT-OF-WAY MUST BE OF THERMOPLASTIC MATERIAL FOR LANES LINES, STOP BARS, CROSSWALKS, ETC. ALL LEGENDS AND ARROWS MUST BE OF VDOT APPROVED TYPE B, CLASS VI PREFORMED PAVEMENT MESSAGE MARKING MATERIAL.

14. IN ACCORDANCE WITH THE VIRGINIA OCCUPATIONAL SAFETY AND HEALTH STANDARDS (CONSTRUCTION INDUSTRIAL) 29 CFR, PART 1929.1989 EDITION, ALL CONTRACTOR EMPLOYEES AND SUBCONTRACTOR(S) EMPLOYEES EXPOSED TO VEHICULAR TRAFFIC WILL BE PROVIDED WITH AND REQUIRED TO WEAR WARNING VESTS MARKED WITH OR MADE OF REFLECTORIZED OR HIGH VISIBILITY MATERIALS.

15. FOR CONSTRUCTION OPERATIONS LASTING MORE THAN 14 DAYS, THE CONTRACTOR WILL INSTALL "ROAD WORK AHEAD" (W 21-4, 48" X 48") AND "END ROAD WORK" (G 20-2A, 48" X 24") WARNING SIGNS ON 4" x 4" WOODEN GROUND MOUNTED POSTS. THESE SIGNS MUST BE INSTALLED PRIOR TO BEGINNING CONSTRUCTION WORK AND WILL BE REMOVED AFTER THE COMPLETION OF ALL CONSTRUCTION ACTIVITIES.

16. FOR ALL APPROVED CONSTRUCTION/TRUCK ENTRANCES, THE CONTRACTOR WILL INSTALL "TRUCKS ENTERING HIGHWAY" (48" X 48" ORANGE AND BLACK) WARNING SIGNS ON 4" x 4" WOODEN GROUND MOUNTED POSTS. THESE SIGNS WILL BE INSTALLED APPROXIMATELY 500 FEET IN ADVANCE OF ALL APPROVED CONSTRUCTION ACCESS/ENTRANCE POINTS.

17. ANY TRAFFIC CONTROL DEVICES INCLUDING BUT NOT LIMITED TO PAVEMENT MARKINGS, SIGNS, AND TRAFFIC CONTROL SIGNAL EQUIPMENT DAMAGED OR DESTROYED BY THE CONTRACTOR MUST BE REPLACED AT THE CONTRACTOR'S EXPENSE UNLESS THEIR REMOVAL OR DESTRUCTION IS CALLED FOR BY THE PLANS.

18. FOR ANY FURTHER INFORMATION ON TRAFFIC MAINTENANCE AND CONTROL REQUIREMENTS, PLEASE CONTACT THE PUBLIC WORKS DEPARTMENT, 306 CEDAR ROAD, CHESAPEAKE, VA 23322, (757) 382-6101 FAX: (757) 382-6310.

19. NOT USED

20. WHEN PROCEEDING FROM ONE STAGE OF CONSTRUCTION TO ANOTHER STAGE OF CONSTRUCTION, ANY EXISTING OR CONSTRUCTION PAVEMENT MARKINGS THAT DO NOT ALIGN WITH THE NEW TRAFFIC PATTERNS AND/OR NECESSARY MARKINGS SHALL BE ERADICATED AND RESTRIPED.

21. CONTRACTOR TO COORDINATE CONSTRUCTION AND ACCESS IN AREAS ADJACENT TO PROJECT NO. 0337-131-104.

22. AT THE CONCLUSION OF EACH WORK DAY, ALL PERMANENT EDGE DROP-OFFS SHALL MEET THE REQUIREMENTS OF FIGURE 2 IN APPENDIX A OF THE 2011 WAPM FOR SAFETY AND PROTECTION OF VEHICULAR TRAFFIC. ALL COST FOR MEETING THESE REQUIREMENTS SHALL BE INCLUDED IN THE PRICE BID FOR OTHER ITEMS IN THE CONTRACT AND NO ADDITIONAL COMPENSATION WILL BE ALLOWED.

23. THE CONTRACTOR SHALL PROVIDE TEMPORARY DRAINAGE AS REQUIRED TO PREVENT PONDING OF WATER ON THE ROADWAY AND ADJACENT PROPERTIES. ANY TEMPORARY DRAINAGE STRUCTURES INSTALLED ON THE PROJECT ARE THE CONTRACTOR'S RESPONSIBILITY. THE COST OF SUCH STRUCTURES SHALL BE CONSIDERED INCIDENTAL AND SHALL NOT BE MEASURED FOR PAYMENT BUY SHALL BE INCLUDED IN THE COST OF OTHER ITEMS.

Nansemond Parkway Widening
VDOT Project Number: 0337-131-101, PE-102, RW-202, C502

INTRODUCTION

THE TRANSPORTATION MANAGEMENT PLAN (TMP) IS DESIGNED TO MINIMIZE MOTORIST DELAYS AND TO KEEP THEM INFORMED WHEN IMPLEMENTING CONSTRUCTION PROJECTS. THIS SHOULD BE ACCOMPLISHED WITHOUT COMPROMIZING PUBLIC OR WORKER SAFETY, OR THE QUALITY OF THE WORK BEING PERFORMED.

THIS TMP ADDRESSES WIDENING AND RECONSTRUCTION ALONG NANSEMOND PARKWAY FROM HELEN STREET TO THE CHESAPEAKE CITY LINE. THE SCOPE OF IMPROVEMENTS INCLUDES GRADING, EARTHWORK, STORM DRAINAGE, CONSTRUCTION OF A STORM WATER MANAGEMENT BASIN, SIDEWALKS, AND NEW COMMERCIAL AND PRIVATE ENTRANCES. THE PROJECT IS LOCATED IN THE CITY OF SUFFOLK, EAST OF SHOULDERS HILL ROAD AND WEST OF I-664.

IT IS PLANNED TO MAINTAIN AT LEAST ONE LANE OF TRAFFIC IN EACH DIRECTION DURING EACH PHASE OF CONSTRUCTION.

TEMPORARY TRAFFIC CONTROL PLAN

GENERAL NOTES
1. THE PROJECT IS A TYPE B PROJECT IN ACCORDANCE WITH VDOT IIM-LD-241.5.
2. THE PROJECT IS LOCATED BETWEEN HELEN STREET AND THE CHESAPEAKE CITY LINE. THE LENGTH OF THE PROJECT IS APPROXIMATELY 0.4 MILES.
3. THE PROJECT IS ON AN EXISTING ROADWAY LOCATION, WITH WIDENING PLANNED ON EACH SIDE OF THE ROADWAY. THE CONTRACTOR SHOULD FIND SUFFICIENT ROOM FOR STORAGE OF EQUIPMENT AND MATERIALS WITHIN THE PROPOSED RIGHT-OF-WAY.
4. THE WORKZONE SHALL BE MAINTAINED ACCORDING TO THE TEMPORARY TRAFFIC CONTROL PLANS AS SHOWN ON PLANS 1J(3) - 1L(4). THE FOLLOWING TRAFFIC CONTROL SPECIFICATIONS FROM THE VIRGINIA WORK AREA PROTECTION MANUAL SHALL BE USED: TTC-1J, 4J, 5J, 16J, 17J, AND 23J.
5. ENTRANCES ON THE NORTH AND SOUTH SIDES OF NANSEMOND PARKWAY WILL BE AFFECTED BY THE WORK ZONE, AND SHALL BE MAINTAINED AT ALL TIMES. SEE NOTE 18 FOR FURTHER GUIDANCE.
6 TYPES OF TRAFFIC CONSIST OF COMMUTERS, SCHOOL BUSES, RESIDENTS AND COMMERCIAL TRUCKS.

TYPICAL SECTIONS

SEE THE PLANS FOR THE TYPICAL SECTIONS FOR EACH PHASE OF TRAFFIC.

PUBLIC COMMUNICATIONS PLAN

SEE NOTES FROM CHESAPEAKE PROJECT 0337-131-104 FOR COMMUNICATIONS PLAN.

TRANSPORTATION OPERATIONS PLAN

SEE NOTES FROM CHESAPEAKE PROJECT 0337-131-104 FOR TRANPORTATION OPERATIONS PLAN.

HOLIDAYS: HOURS INCLUDE NOON PRECEDING WORK DAY THROUGH HOLIDAY LISTED BELOW:

NEW YEARS DAY
EASTER SUNDAY
MEMORIAL DAY
INDEPENDENCE DAY
LABOR DAY
THANKSGIVING DAY
CHRISTMAS DAY

SEE MAINTENANCE OF TRAFFIC AND SEQUENCE OF CONSTRUCTION PLANS FOR PLACEMENT OF CONSTRUCTION SIGNS DURING CONSTRUCTION.

FINAL PLANS

PROJECT	SHEET NO.
0337-133-101	1J(1)

PROJECT MANAGER Sherry Earley, P.E., CITY OF SUFFOLK (757) 514-7703
SURVEYED BY EMI, INC. (757) 368-0945
DESIGN SUPERVISED BY Ian Johnston, P.E. (757) 455-5800
DESIGN BY Clark Nexsen (757) 455-5800

MAINTENANCE OF TRAFFIC AND SEQUENCE OF CONSTRUCTION PHASE I

REVISED	STATE	ROUTE	PROJECT	SHEET NO.
	VA.	337	0337-133-101, PE-102 RW-202, C-502	1J(2)

DESIGN FEATURES RELATING TO CONSTRUCTION OR TO REGULATION AND CONTROL OF TRAFFIC MAY BE SUBJECT TO CHANGE AS DEEMED NECESSARY BY THE DEPARTMENT

VDOT (Division) or Co. Name (Location), Virginia (TECHNICAL DISCIPLINE)

VDOT (Division) or Co. Name (Location), Virginia (TECHNICAL DISCIPLINE)

1. Surface Course (for final pavement section) omitted for temporary pavement
2. 2" Asphalt Conc. Ty. IM-19.0D
3. 4" Asphalt Conc. Base Course Ty. BM-25
4. 9" Aggr. Mat'l Ty. I, Size 21-A
5. Class 'A' Topsoil, min. Depth 2"

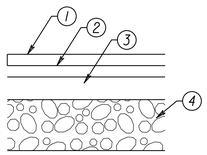

TEMPORARY PAVEMENT SECTION

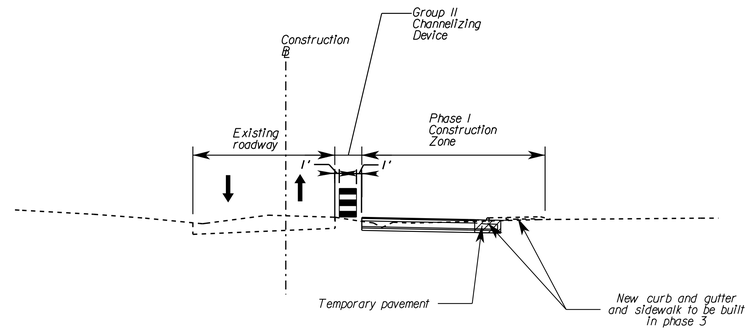

Phase I Construction Typical Section

No Scale

Sequence of Construction Phase I

1. See sheet 1J(1) for general maintenance of traffic notes and details.
2. Install construction signs on approaches to construction area.
3. Install all erosion and sediment control devices prior to construction.
4. Clear and rough grade area of construction.
5. Remove existing curb and gutter on the eastbound side of Nansemond Parkway from approximately sta 10+25 to sta 10+50, as shown on Maintenance of Traffic Plans, Phase I.
6. Install stormwater management basin, storm outfalls, pipe crossings, storm structures and waterline crossings on south side of Nansemond Parkway as shown in construction area on Maintenance of Traffic Plans, Phase I. Any storm structures which will carry vehicular traffic in subsequent phases shall be capped with temporary HS-20 traffic rated tops. Final design construction will be done when vehicular traffic is no longer required on top of storm structure.
7. Install temporary pavement in curb and gutter and verge area as shown on Maintenance of Traffic and Sequence of Construction Plans, Phase I.
8. Construct improvements of new Nansemond Parkway on the south side as shown in construction area on Maintenance of Traffic Plans and Sequence of Construction Plans, Phase I. Curb and Gutter and sidewalk to be constructed in Phase 3.
9. Surface course shall be provided in Phase 3.

FINAL PLANS

$TIME$STAMP$

PROJECT	SHEET NO.
0337-133-101	1J(2)

PROJECT MANAGER Sherry Earley, P.E., CITY OF SUFFOLK (757) 514-7703
SURVEYED BY EMI, INC. (757) 368-0945
DESIGN SUPERVISED BY Ira Johnston, P.E. (757) 455-5800
DESIGNED BY Clark Nexsen (757) 455-5800

MAINTENANCE OF TRAFFIC AND SEQUENCE OF CONSTRUCTION PHASE I

REVISED	STATE	ROUTE	PROJECT	SHEET NO.
	VA.	337	0337-133-101, PE-102 RW-202, C-502	1J(3)

DESIGN FEATURES RELATING TO CONSTRUCTION OR TO REGULATION AND CONTROL OF TRAFFIC MAY BE SUBJECT TO CHANGE AS DEEMED NECESSARY BY THE DEPARTMENT

VDOT (Division) or Co. Name (Location), Virginia (TECHNICAL DISCIPLINE)

VDOT (Division) or Co. Name (Location), Virginia (TECHNICAL DISCIPLINE)

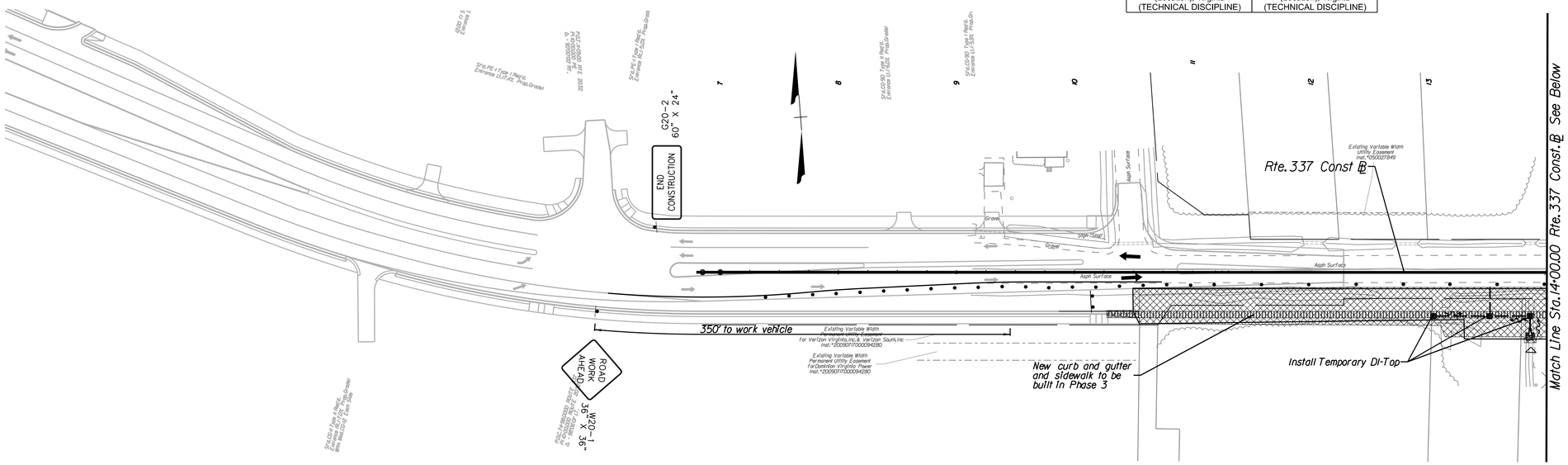

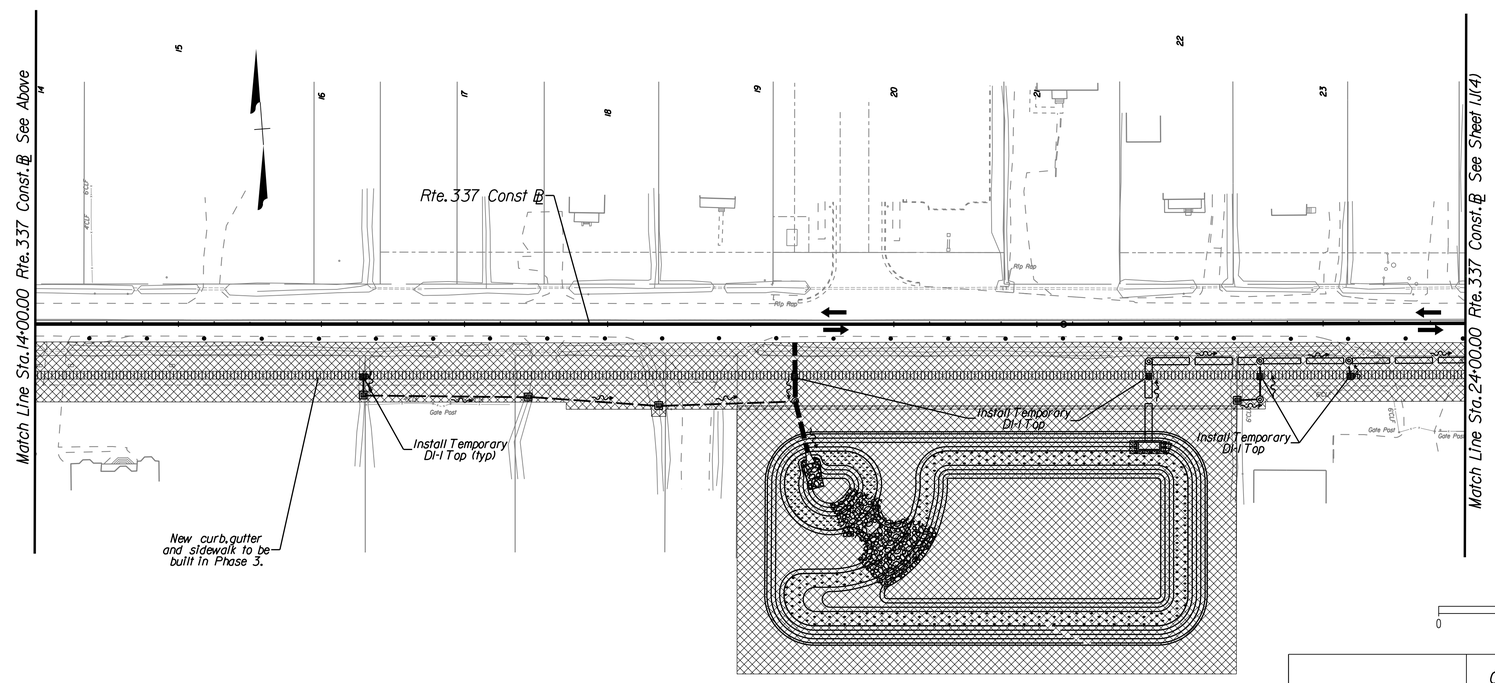

FINAL PLANS

LEGEND

- Current phase construction area
- Temporary Pavement
- Type III barricade
- 40' Tangent, Transition 20', Group II Channelizing Device
- Construction Sign
- Direction of traffic

REFERENCES (PROFILES, DETAIL & DRAINAGE DESCRIPTION SHEETS, ETC.)	
Plan Sheets	3,4,5
Mainline Profile	3A,4A,5A
Drainage Descr.	2C
Entrance Profile	8
Pvmt. Markings	9(3),9(4),9(5)
Utility Plan	10(3),10(4),10(5)
Landscape Plan	11(3),11(4),11(5)

SCALE 0 50' 100'

PROJECT	SHEET NO.
0337-133-101	1J(3)

PROJECT MANAGER Sherry Earley, P.E., City of Suffolk (757) 514-7703
SURVEYED BY EMI, INC. (757) 368-0945
DESIGN SUPERVISED BY Ira Johnston, P.E., Clark Nexsen (757) 455-5800
DESIGNED BY Clark Nexsen (757) 455-5800

MAINTENANCE OF TRAFFIC AND SEQUENCE OF CONSTRUCTION PHASE I

VDOT (Division) or Co. Name (Location), Virginia (TECHNICAL DISCIPLINE)	VDOT (Division) or Co. Name (Location), Virginia (TECHNICAL DISCIPLINE)

REVISED	STATE	STATE ROUTE	STATE PROJECT	SHEET NO.
	VA.	337	0337-133-101, PE-102 RW-202, C-502	1J(4)

DESIGN FEATURES RELATING TO CONSTRUCTION OR TO REGULATION AND CONTROL OF TRAFFIC MAY BE SUBJECT TO CHANGE AS DEEMED NECESSARY BY THE DEPARTMENT

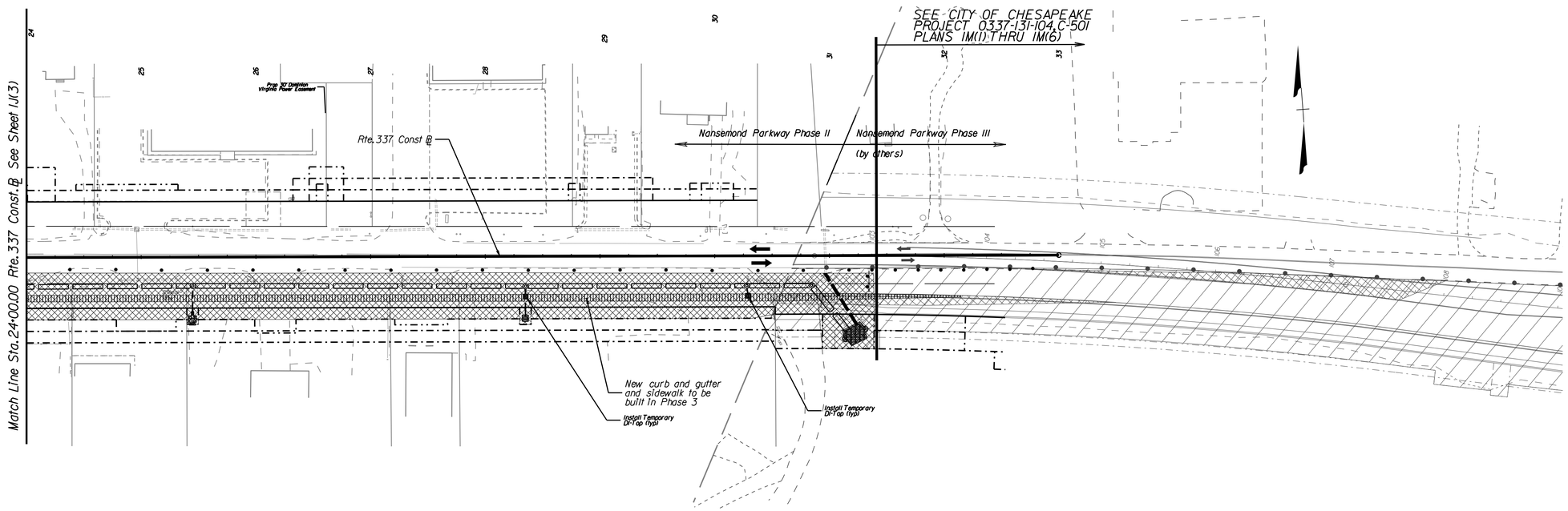

LEGEND

- Current phase construction area
- Temporary Pavement
- Type III barricade
- 40' Tangent / Transition 20' — Group II Channelizing Device
- Construction Sign
- Direction of traffic

FINAL PLANS

REFERENCES (PROFILES, DETAIL & DRAINAGE DESCRIPTION SHEETS, ETC.)	
Plan Sheets	6,7
Mainline Profile	6A,7A
Drainage Descr.	2C
Entrance Profile	8
Pavement Markings	9(6),9(7)
Utility Plan	10(6),10(7)
Landscape Plan	11(6),11(7)

SCALE 0 50' 100'

PROJECT	SHEET NO.
0337-133-101	1J(4)

$TIME$STAMP$

PROJECT MANAGER Sherry Earley, P.E., CITY OF SUFFOLK (757) 514-7703
SURVEYED BY EMI, INC. (757) 368-0945
DESIGN SUPERVISED BY Ira Johnston, P.E. (757) 455-5800
DESIGN BY Clark Nexsen (757) 455-5800

MAINTENANCE OF TRAFFIC AND SEQUENCE OF CONSTRUCTION PHASE 2

VDOT (Division) or Co. Name (Location), Virginia (TECHNICAL DISCIPLINE)	VDOT (Division) or Co. Name (Location), Virginia (TECHNICAL DISCIPLINE)

REVISED	STATE	ROUTE	PROJECT	SHEET NO.
	VA.	337	0337-133-101, PE-102 RW-202, C-502	1K(2)

DESIGN FEATURES RELATING TO CONSTRUCTION OR TO REGULATION AND CONTROL OF TRAFFIC MAY BE SUBJECT TO CHANGE AS DEEMED NECESSARY BY THE DEPARTMENT

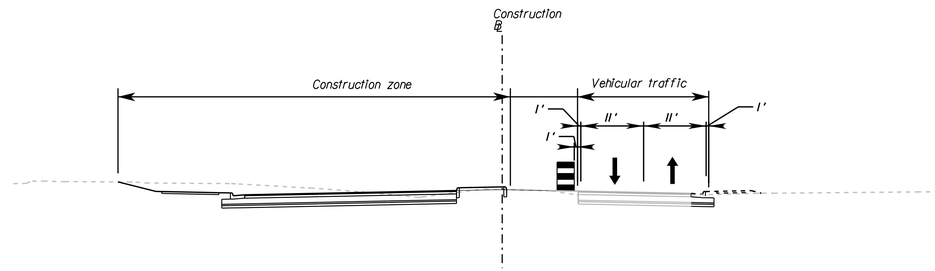

Phase 2 Construction Typical Section

No Scale

Sequence of Construction Phase 2

1. See sheet 1J(1) for general maintenance of traffic notes and details.
2. Remove median from station 6+50 to station 10+50 and install temporary pavement as shown on Maintenance of Traffic and Sequence of Construction Plans, Phase 2 to accommodate traffic shift during Phase 2.
3. Install temporary pavement markings on newly built improvements as shown in construction area on Maintenance of Traffic and Sequence of Construction Plans, Phase 2.
4. While maintaining 1 lane of traffic in each direction, transfer eastbound and westbound traffic onto the newly constructed south side of Nansemond Parkway as shown on the Maintenance of Traffic and Sequence of Construction Plans, Phase 1.
5. Demolish existing roadway in area of construction as shown on Maintenance of Traffic and Sequence of Construction Plans, Phase 2.
6. Install storm outfalls, pipes, storm structures and utility improvements on north side of Nansemond Parkway as shown in construction area on Maintenance of Traffic and Sequence of Construction Plans, Phase 2.
7. Construct improvements of new Nansemond Parkway on the north side as shown in construction area on Maintenance of Traffic and Sequence of Construction Plans, Phase 2.
8. Surface course shall be provided in Phase 3.

FINAL PLANS

PROJECT	SHEET NO.
0337-133-101	1K(2)

DGN $REF001 $REF002 $REF003 $REF004 $REF005 $REF006
$DGNLEV $LEV001 $LEV002 $LEV003 $LEV004 $LEV005 $LEV006

PROJECT MANAGER Sherry Earley, P.E., CITY OF SUFFOLK (757) 514-7703
SURVEYED BY EMI, INC. (757) 368-0945
DESIGN SUPERVISED BY Ian Johnston, P.E. (757) 455-5800
DESIGN BY Clark Nexsen (757) 455-5800

MAINTENANCE OF TRAFFIC AND SEQUENCE OF CONSTRUCTION PHASE 2

REVISED	STATE	ROUTE	PROJECT	SHEET NO.
	VA.	337	0337-133-101, PE-102 RW-202, C-502	IK(3)

VDOT (Division) or Co. Name (Location), Virginia (TECHNICAL DISCIPLINE)

VDOT (Division) or Co. Name (Location), Virginia (TECHNICAL DISCIPLINE)

DESIGN FEATURES RELATING TO CONSTRUCTION OR TO REGULATION AND CONTROL OF TRAFFIC MAY BE SUBJECT TO CHANGE AS DEEMED NECESSARY BY THE DEPARTMENT

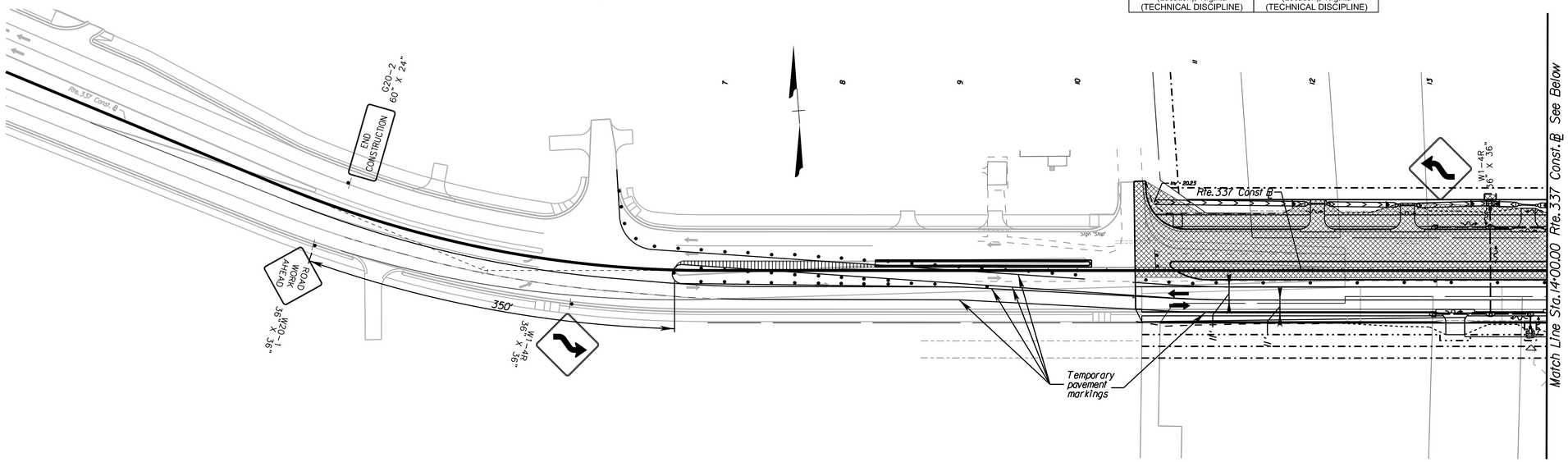

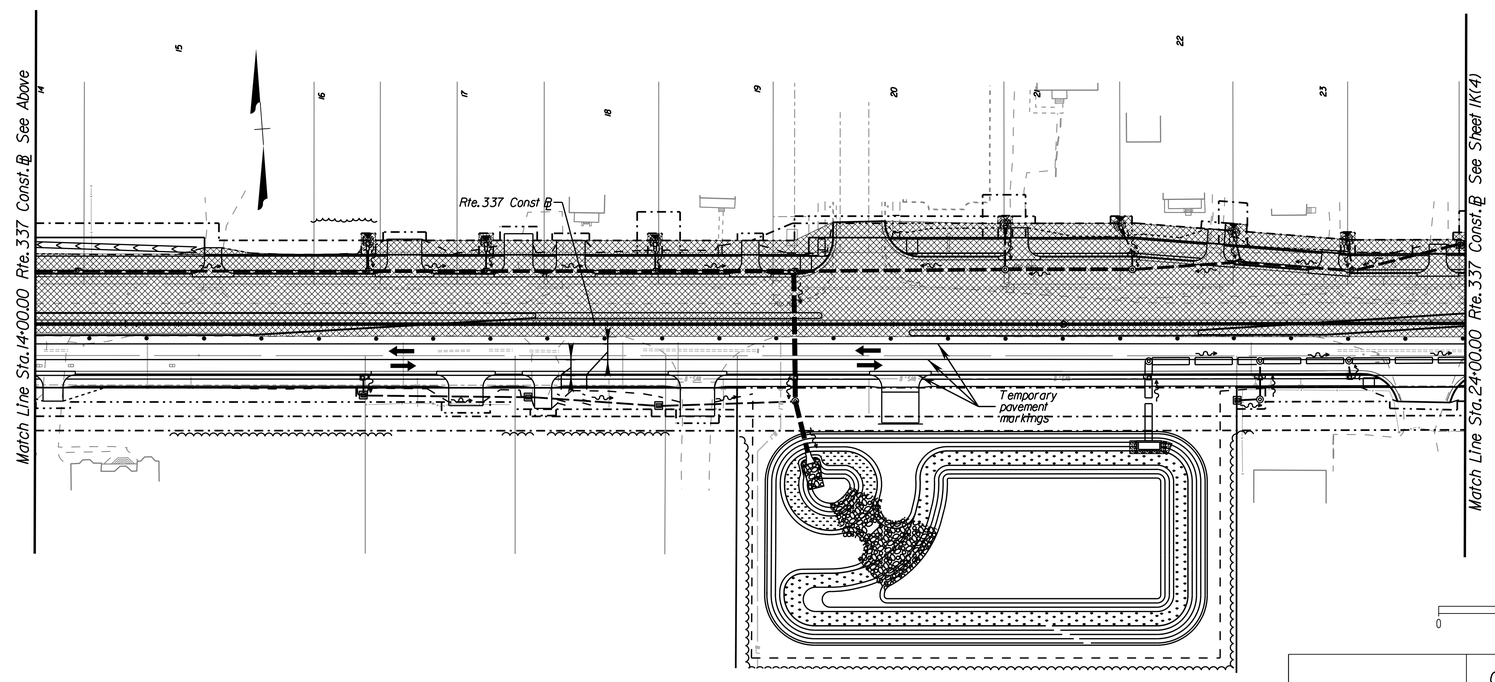

FINAL PLANS

LEGEND

- Current phase construction area
- Temporary Pavement
- Type III barricade
- 40' Tangent / Transition 20' — Group II Channelizing Device
- Construction Sign
- Direction of traffic

REFERENCES (PROFILES, DETAIL & DRAINAGE DESCRIPTION SHEETS, ETC.)	
Plan Sheets	3,4,5
Mainline Profile	3A,4A,5A
Drainage Descr.	2C
Entrance Profile	8
Pvmt. Markings	9(3),9(4),9(5)
Utility Plan	10(3),10(4),10(5)
Landscape Plan	11(3),11(4),11(5)

SCALE 0 50' 100'

PROJECT	SHEET NO.
0337-133-101	IK(3)

$TIME$STAMP$

d4146001K(3).dgn 5/20/2016 1:29:26 PM

PROJECT MANAGER Sherry Earley, P.E., City of Suffolk (757) 514-7703
SURVEYED BY EMI, INC. (757) 368-0945
DESIGN SUPERVISED BY Ina Johnston, P.E., Clark Nexsen 455-5800
DESIGNED BY Clark Nexsen (757) 455-5800

MAINTENANCE OF TRAFFIC AND SEQUENCE OF CONSTRUCTION PHASE 2

VDOT (Division) or Co. Name (Location), Virginia (TECHNICAL DISCIPLINE)	VDOT (Division) or Co. Name (Location), Virginia (TECHNICAL DISCIPLINE)

REVISED	STATE	STATE ROUTE	STATE PROJECT	SHEET NO.
	VA.	337	0337-133-101, PE-102 RW-202, C-502	IK(4)

DESIGN FEATURES RELATING TO CONSTRUCTION OR TO REGULATION AND CONTROL OF TRAFFIC MAY BE SUBJECT TO CHANGE AS DEEMED NECESSARY BY THE DEPARTMENT

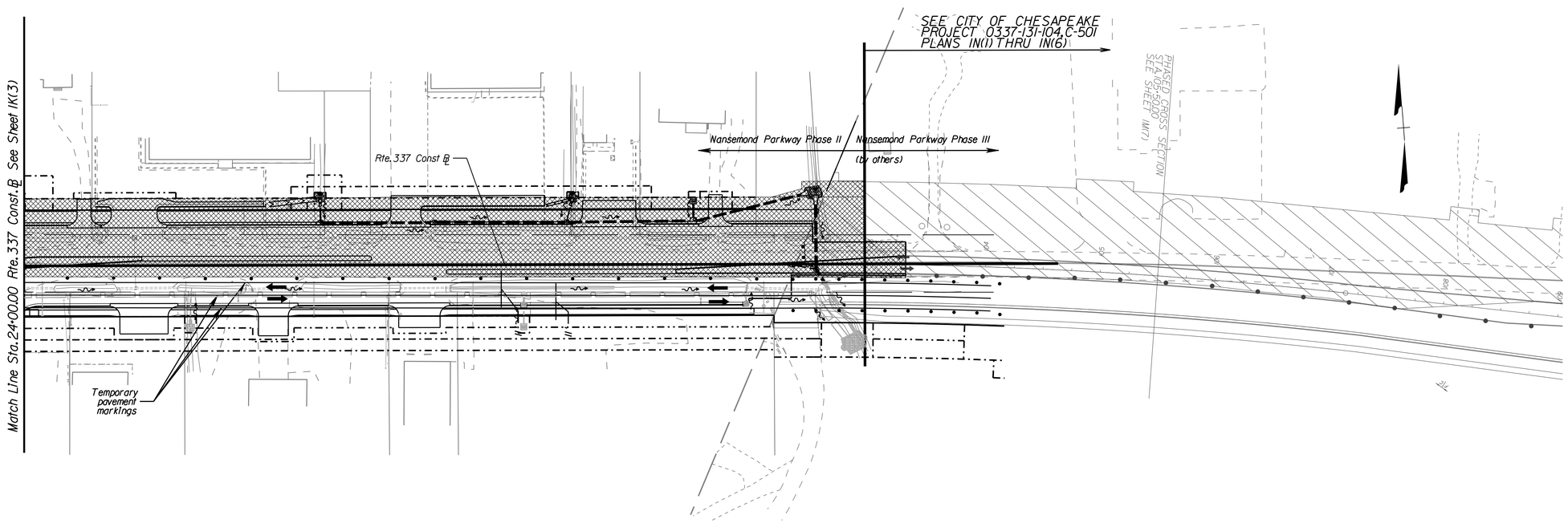

LEGEND

- Current phase construction area
- Temporary Pavement
- Type III barricade
- 40' Tangent / Transition / 20' — Group II Channelizing Device
- Construction Sign
- Direction of traffic

FINAL PLANS

REFERENCES (PROFILES, DETAIL & DRAINAGE DESCRIPTION SHEETS, ETC.)	
Plan Sheets	6,7
Mainline Profile	6A,7A
Drainage Descr.	2C
Entrance Profile	8
Pavement Markings	9(6),9(7)
Utility Plan	10(6),10(7)
Landscape Plan	11(6),11(7)

SCALE 0 50' 100'

PROJECT	SHEET NO.
0337-133-101	IK(4)

$TIME$STAMP$

PROJECT MANAGER Sherry Earley, P.E., CITY OF SUFFOLK (757) 514-7703
SURVEYED BY EMI, INC. (757) 368-0945
DESIGN SUPERVISED BY Ira Johnston, P.E. (757) 455-5800
DESIGN BY Clark Nexsen (757) 455-5800

MAINTENANCE OF TRAFFIC AND SEQUENCE OF CONSTRUCTION PHASE 3

VDOT (Division) or Co. Name (Location), Virginia (TECHNICAL DISCIPLINE)	VDOT (Division) or Co. Name (Location), Virginia (TECHNICAL DISCIPLINE)

REVISED	STATE	ROUTE	PROJECT	SHEET NO.
	VA.	337	0337-133-101, PE-102 RW-202, C-502	IL(2)

DESIGN FEATURES RELATING TO CONSTRUCTION OR TO REGULATION AND CONTROL OF TRAFFIC MAY BE SUBJECT TO CHANGE AS DEEMED NECESSARY BY THE DEPARTMENT

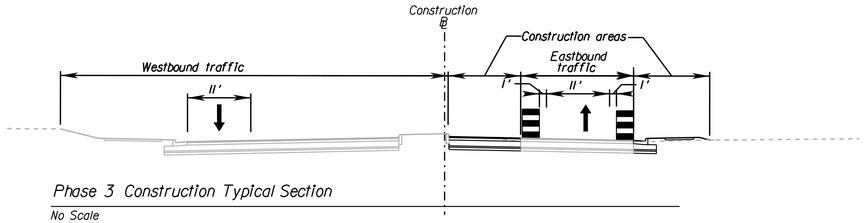

Phase 3 Construction Typical Section

No Scale

Sequence of Construction Phase 3

1. See sheet IJ(1) for general maintenance of traffic notes and details.
2. Install temporary pavement markings on newly built improvements as shown in construction area on Maintenance of Traffic and Sequence of Construction Plans, Phase 3.
3. While maintaining 2 lanes of traffic westbound and 1 lane of traffic eastbound, transfer eastbound traffic onto the newly constructed south side of Nansemond Parkway.
4. Remove DI-tops and install final design storm structures.
5. Construct the remainder of the roadway improvements, including part of the median, the roadway on the south side of the median and the curb and gutter and sidewalk area on the south side of Nansemond Parkway. Construction work shall not be allowed simultaneously on both sides of vehicular traffic.
6. Install surface course on all newly constructed areas of Nansemond Parkway.
7. Place permanent pavement markings on newly built improvements to Nansemond Parkway as shown on Plan Sheets 9(3)-9(7).
8. Final grade and seed all unpaved areas, and install landscaping as shown on sheets 11(3) - 11(7).
9. Remove erosion and sediment control after vegetation is established.
10. Remove all temporary construction signs.

FINAL PLANS

PROJECT	SHEET NO.
0337-133-101	IL(2)

DGN $REF001 $REF002 $REF003 $REF004 $REF005 $REF006
$DGNLEV $LEV001 $LEV002 $LEV003 $LEV004 $LEV005 $LEV006

PROJECT MANAGER Sherry Earley, P.E., CITY OF SUFFOLK (757) 514-7703
SURVEYED BY EMI, INC. (757) 368-0945
DESIGN SUPERVISED BY Ira Johnston, P.E. (757) 455-5800
DESIGN BY Clark Nexsen (757) 455-5800

MAINTENANCE OF TRAFFIC AND SEQUENCE OF CONSTRUCTION PHASE 3

REVISED	STATE	ROUTE	PROJECT	SHEET NO.
	VA.	337	0337-133-101, PE-102 RW-202, C-502	IL(3)

DESIGN FEATURES RELATING TO CONSTRUCTION OR TO REGULATION AND CONTROL OF TRAFFIC MAY BE SUBJECT TO CHANGE AS DEEMED NECESSARY BY THE DEPARTMENT

VDOT (Division) or Co. Name (Location), Virginia (TECHNICAL DISCIPLINE)

VDOT (Division) or Co. Name (Location), Virginia (TECHNICAL DISCIPLINE)

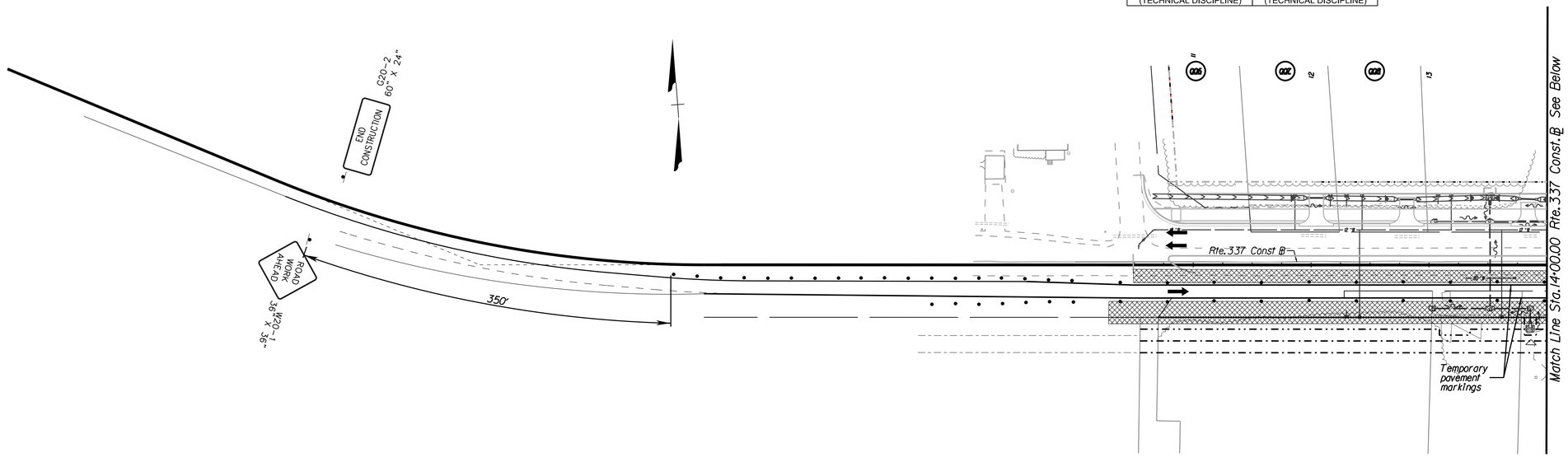

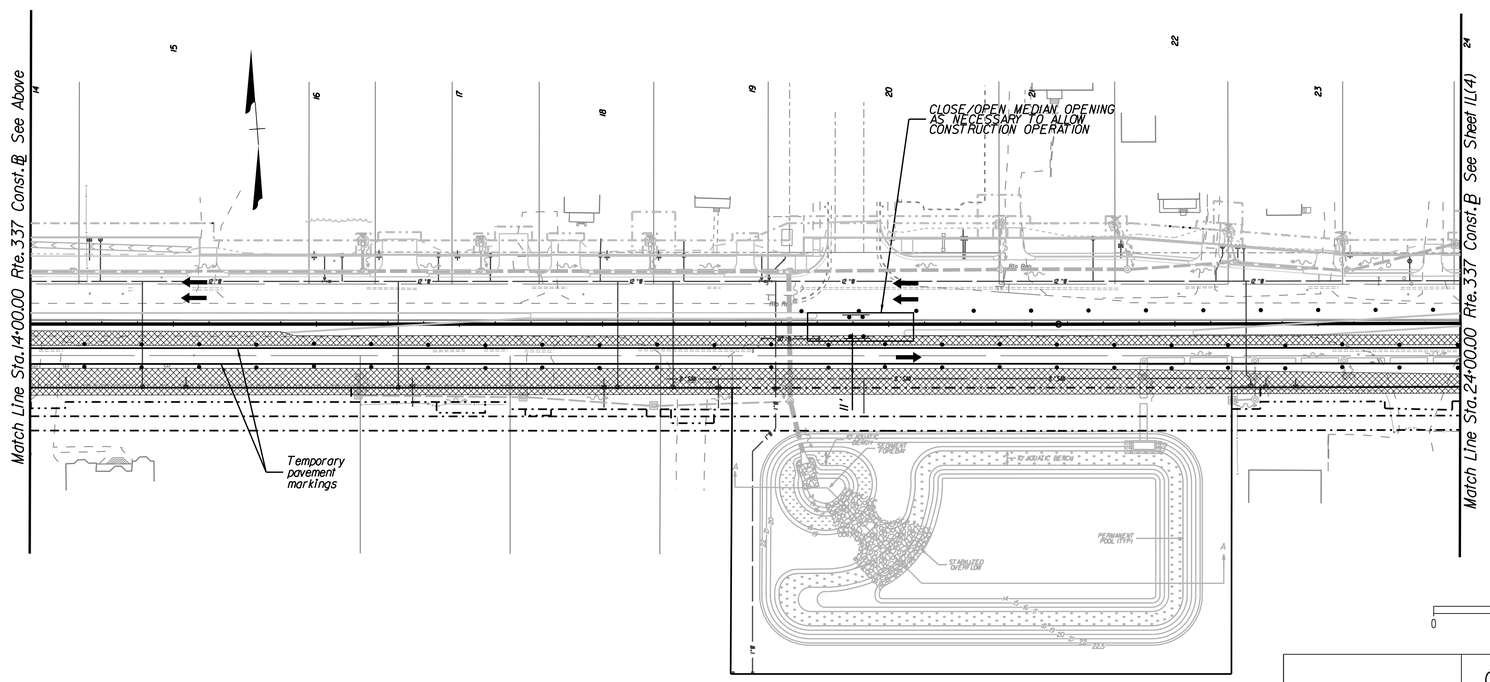

FINAL PLANS

LEGEND

- Current phase construction area
- 40' Tangent / Transition 20' — Group II Channelizing Device
- Construction Sign
- Direction of traffic
- Type III Barricade

REFERENCES (PROFILES, DETAIL & DRAINAGE DESCRIPTION SHEETS, ETC.)	
Plan Sheets	3,4,5
Mainline Profile	3A,4A,5A
Drainage Descr.	2C
Entrance Profile	8
Pvmt. Markings	9(3),9(4),9(5)
Utility Plan	10(3),10(4),10(5)
Landscape Plan	11(3),11(4),11(5)

SCALE 0 50' 100'

PROJECT	SHEET NO.
0337-133-101	IL(3)

$TIME$STAMP$

d4146001L(3).dgn 5/20/2016 1:29:27 PM

PROJECT MANAGER Sherry Earley, P.E., City of Suffolk (757) 514-7703
SURVEYED BY EMI, INC. (757) 368-0945
DESIGN SUPERVISED BY Ina Johnston, P.E., Clark Nexsen (757) 455-5800
DESIGNED BY Clark Nexsen (757) 455-5800

MAINTENANCE OF TRAFFIC AND SEQUENCE OF CONSTRUCTION PHASE 3

VDOT (Division) or Co. Name (Location), Virginia (TECHNICAL DISCIPLINE)	VDOT (Division) or Co. Name (Location), Virginia (TECHNICAL DISCIPLINE)

REVISED	STATE	ROUTE	PROJECT	SHEET NO.
	VA.	337	0337-133-101, PE-102 RW-202, C-502	IL(4)

DESIGN FEATURES RELATING TO CONSTRUCTION OR TO REGULATION AND CONTROL OF TRAFFIC MAY BE SUBJECT TO CHANGE AS DEEMED NECESSARY BY THE DEPARTMENT

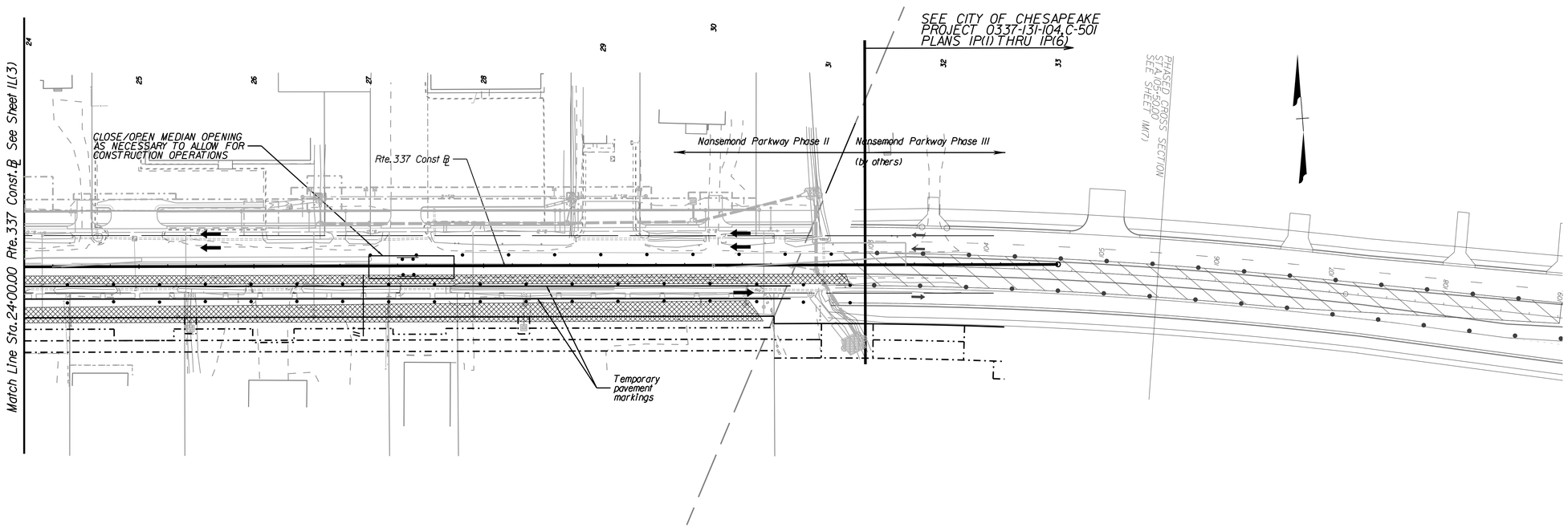

LEGEND

- Current phase construction area
- 40' Tangent Transition 20' — Group II Channelizing Device
- Construction Sign
- Direction of traffic
- Type III Barricade

FINAL PLANS

REFERENCES (PROFILES, DETAIL & DRAINAGE DESCRIPTION SHEETS, ETC.)	
Plan Sheets	6,7
Mainline Profile	6A,7A
Drainage Descr.	2C
Entrance Profile	8
Pavement Markings	9(6),9(7)
Utility Plan	10(6),10(7)
Landscape Plan	11(6),11(7)

SCALE 0 50' 100'

PROJECT	SHEET NO.
0337-133-101	1L(4)

$TIME$STAMP$

PROJECT MANAGER Sherry Earley, P.E. City of Suffolk (757) 514-7703
SURVEYED BY PMI, INC. (757) 368-0945
DESIGN SUPERVISED BY Ian Johnston, P.E. Clark Nexsen (757) 455-5800
DESIGN BY Clark Nexsen (757) 455-5800

GENERAL NOTES

GRADING

G-1 The grade line denotes top of finished pavement unless shown otherwise on typical sections or plans.

G-2 Earthwork quantities on this project are based on anticipated settlement and may require adjusting during construction.

G-4 The cost of removal of all existing concrete items located in the area to be graded, including, but not limited to the following, shall be included in the price bid for regular excavation: e.g. sidewalk, curb & gutter, paved ditch, small footings, small block or brick items.

G-6 The borrow material for this project shall be a minimum CBR 20 for fills less than 24-inches in height. For fills greater than 24-inches in height, borrow material shall be minimum CBR 15 except for the top 12-inches of the fill which shall be minimum CBR 20 or as approved by the Materials Engineer.

PAVEMENT

P-2 The pavement materials on this project will be paid for on a tonnage basis. The weight will vary in accordance with the specific gravity of the aggregates and the asphaltic content of the mix actually used to secure the design depth. The weight of the asphalt concrete is based on 95% of the theoretical maximum density.

INCIDENTALS

I-4 All trees located within the Clear Zone or within a minimum of 30 feet of the edge of pavement, within the limits of the right of way or construction easement, unless otherwise noted on plans or directed by the Engineer, shall be removed, as provided for in Section 301, of the applicable VDOT Road and Bridge Specifications.

I-9 When no centerline alignment is shown for a proposed entrance, the entrance shall be constructed in the same location as the existing entrance.

I-10 St'd. RM-1 Right of Way monuments shall be set by the Contractor.

I-16 The "underground utilities" survey data on this project has been provided by consultant and copies are available from the Department.

I-17 For method of constructing Straight-Line Taper Lanes in Curb and/or Curb and gutter sections, see typical details on Sheet 2A.

I-18 All pavement markings and traffic flow arrows shown on the roadway construction plans are schematic only. The actual location and application of pavement markings shall be in accordance with Section 704 of the applicable VDOT Road and Bridge Specifications, MUTCD, sequence of construction/traffic control plans, pavement marking plan sheets 9(1) thru 9(7) and as directed by the Engineer.

I-19 The following sources, under contract with the City of Suffolk, have provided information on this project:

Hydraulic Design	-	Clark Nexsen
Roadway Design	-	Clark Nexsen
Utility Design	-	Clark Nexsen
Utility Designation	-	Accumark
Survey	-	PMI

If questions or problems arise during construction, please contact the Project Manager. DO NOT CONTACT THE OUTSIDE SOURCES.

I-20 The Official Electronic .tif Version of the plans will override the paper copies or prints of specific layers.

Portions of this plan assembly have been CADD generated. To assist in the construction of the project electronic files will be available to the prime contractor after award of the contract.

I-21 All electronic plan assemblies will include the construction plans in two formats: .pdf files and MicroStation format (.dgn) files. Only the .pdf files will be considered as part of the official plan assembly.

The MicroStation format (.dgn) files are furnished only as information for the contractor. These plans are developed in layers (levels) to aid in readability. However, the construction items may or may not be in the proper layering scheme as described in the VDOT CADD Manual. The MicroStation files will only match the scanned files if all levels are turned on. A MicroStation Software license is required to be able to read these files.

STORMWATER MANAGEMENT

S-1 CLEARING AND GRUBBING OF SWM BASIN SITE- The area where the dam is to be constructed and the area upstream of the dam, to an elevation equal to the crest of the dam (maximum ponded water elevation), shall be cleared and grubbed in accordance with Section 301 of the applicable VDOT Road and Bridge Specifications.

S-2 SWM BASIN DAM CONSTRUCTION - The dam for detention basins (no permanent pool) shall conform to the details contained in the plans and shall be constructed in accordance with Section 303 of the applicable VDOT Road and Bridge Specifications. The native material on which the dam will set shall meet the specifications for AASHTO Type A-4 or finer material. Where the native material does not meet this requirement, the area beneath the dam is to be excavated a minimum of 4' (1.2m) and backfilled with a material meeting the AASHTO Type A-4 or finer classification, unless otherwise specified in the plans. The material used for the embankment of the dam shall be AASHTO Type A-4 or finer or as otherwise specified in the plans. Dams with foundation and embankment material not meeting the above requirements, dams greater than 15' (4.6m) in height, or dams for retention basins (permanent pool) shall incorporate a membrane-lined trench, a homogenous embankment with seepage controls, a zoned embankment or other such approved designs as specified in the plans.

S-3 SWM BASIN OUTLET PIPE - The pipe culvert under or through the dam for detention basins (no permanent pool) shall be reinforced concrete pipe with rubber gaskets in accordance with Section 232 and 212 of the applicable VDOT Road and Bridge Specifications. A concrete cradle shall extend the full length of the pipe culvert in accordance with the Drainage Structure. The connection between the pipe culvert and the SWM Drainage Structure (or other control structure) shall be made watertight as approved by the Engineer and the cost shall be included in the price bid for pipe.

S-4 The SWM-1 Drainage Structure (or other control structure) shall have 4" (100 mm) high numbers and 1" (25 mm) wide strips painted at 1' (300 mm) intervals as shown on the Standard Drawings or detail sheets. The numbers and stripes are to be installed at the time of the initial installation of the SWM-1 Drainage Structure (or other control structure). Paint and application shall be in accordance with Section 231 and 411 of the applicable VDOT Road and Bridge Specifications and the cost is to be included in the price bid for the applicable structure.

S-5 All SWM Basins designated for use as temporary sediment basins shall be constructed during the initial phase of earth moving activities or as specified by the plans or directed by the Engineer. During project construction, the SWM-1 Drainage structure (or other control structure) shall be modified in accordance with the Standard Drawings or plan details in order to provide a temporary sediment basin with both a "wet" storage volume (permanent pool) and a "dry" storage volume. Sediment accumulated in the basin shall be removed when the volume of the "wet" storage (permanent pool) has been reduced by 50%. Sediment shall be disposed of in accordance with Section 106.64 of the applicable VDOT Road and Bridge Specifications. When project construction is complete to a stage where no additional sediment from the project is expected to enter the basin, as determined by the Engineer, the basin shall be cleaned out and restored to the original design elevations, the area stabilized and all temporary modifications to the SWM-1 Drainage Structure (or other control structure) removed.

EROSION AND SILTATION CONTROL

E-1 Erosion and Sediment Control Plan Information: (To be developed)

E-2 The temporary erosion and siltation control items shown on the E&S Control (ESC) Plan for this project are intended to provide a general plan for controlling erosion and sediment within the project limits. The E&S Control Plan is based on field conditions at the time of plan development and an assumed sequence of construction for the project. The contractor, in conjunction with the Project Engineer and/or Environmental Monitor, shall adjust the location, quantity and type of erosion and sediment control items required based on the actual field conditions encountered at the time of construction and the actual scheduling and sequencing of the construction activities. Significant changes to the proposed ESC Plan (e.g.' those that require an emergency analysis) shall be submitted to the applicable District Hydraulics Engineer for review and approval. Any change to the proposed ESC Plan must be noted on a designated plan set (Record Set) which shall be retained on the project site and made available upon request.

E-3 The areas beyond the project's construction area are to be protected from siltation. Perimeter controls such as filter barrier, tree protection, etc. shall be installed prior to any grubbing operations or other earth moving activities.

E-7 Rock for Check Dams, Drop Inlet Silt Traps, Erosion Control Stone and Riprap in channels shall be in accordance with Section 203 and Section 414 of the applicable VDOT Road and Bridge Specifications.

E-8 The following symbols are used to depict Erosion Control items in the plan assembly:

EC-2	Denotes Protective Covering, St'd. EC-2
TFB	Denotes Temporary Filter Barrier, St'd EC-5
RCD-1	Denotes Rock Check Dam, Type I; St'd EC-4
RCD-2	Denotes Rock Check Dam, Type II; St'd EC-4
DIST-A	Denotes Drop Inlet Silt Trap Type A; St'd EC-6
DIST-B	Denotes Drop Inlet Silt Trap Type B; St'd EC-6
TP	Denotes Tree Protection

Drainage General Notes on Sheet 2C

VDOT (Division) or Co. Name (Location), Virginia (TECHNICAL DISCIPLINE)	VDOT (Division) or Co. Name (Location), Virginia (TECHNICAL DISCIPLINE)

Project description
The erosion and sediment control plan will address land disturbance for the Nansemond Parkway Phase II design located in Suffolk, Virginia. This project includes the widening from an existing two lane undivided to four lane divided with median breaks along Nansemond Parkway from Helen Street east to the City Line, a length of approximately 0.40 miles. In addition to the widening, the project also includes the extension of the City of Suffolk 12in water distribution main along the north side of Nansemond Parkway from the approximate location of the Union Baptist Church to the City of Suffolk City line with Chesapeake.

Existing Site Conditions
Nansemond Parkway is a two lane undivided primarily east-west Urban Minor Arterial. Generally, the existing topography along Nansemond Parkway is level terrain.

Adjacent Property
Commercial and industrial businesses line the north and south sides of the roadway in the project area.

Off-Site Areas
There are no off-site areas associated with this project.

Soils
A geotechnical report is provided as an appendix within the specifications.

Critical Erosion Areas
There are no critical erosion areas associated with this project.

Wetlands
All Wetland permit authorizations for all impacts to wetlands must be obtained from the relevant agencies prior to construction. No additional impacts to wetlands are authorized. A complete copy of the wetland permitting documentation will be provided by the owner.

Erosion and Sediment Control Measures
Unless otherwise indicated, all vegetative and structural erosion and sediment control practices shall be constructed and maintained according to minimum standards and specifications of the Virginia Erosion and Sediment Control Handbook (VESCH), current edition. The minimum standards of the VESCH shall be adhered to unless otherwise waived or approved by variance from the City prior to demolition and site clearing.

Measures include silt fence, storm drain inlet protection, rip rap, permanent and temporary seeding, trees, shrubs, vines, ground covers, tree preservation and protection, and dust control.

Erosion and sediment control measures shall be installed prior to demolition and earth-moving activities.

Contact the City of Suffolk Public Works Department at (757) 514-4355 at least 48 hours prior to any land disturbing activities (including demolition) to schedule a pre-construction conference.

Management Strategies

1. The contractor shall install filter barrier and tree protection on the project site before any site demolition or earth-moving activity. Site access by construction vehicles shall be in accordance with the Virginia Work Area Protection Manual, 2011.
2. The contractor shall stock pile soil and other credible materials and stabilize or protect with sediment trapping measures. The contractor is responsible for temporary and permanent stabilization measures for stockpiles located within the project site or those transported from the project site.
3. The contractor shall monitor and control dust using water, mulch or chemical dust adhesives or other measures as directed by the city inspector.
4. The contractor shall complete major grading as soon as possible after beginning construction. Approved soil stabilization measures shall be applied to all denuded or disturbed areas that may not be at final grade but will remain undisturbed longer than 30 days. The contractor shall install permanent stabilization within 7 days or as directed by the city inspector after final grading is completed.
5. The contractor shall install and maintain additional erosion and sediment control measures necessary to prevent erosion and sedimentation as determined by the City inspector.
6. Once the city inspector determines construction is substantially complete and the work area is stabilized, the contractor shall remove temporary erosion and sediment control measures and dispose of sediments within 30 days.

Maintenance
The contractor is responsible for the installation and maintenance of all erosion and sediment control practices.

Filter barrier shall be checked regularly for undermining and deterioration of the fabric. Sediment shall be removed when the level of sediment deposition reaches halfway to the top of the barrier. Sediments and excess spoils shall be disposed by the contractor at a facility approved by local and state regulations.

REVISED	STATE	ROUTE	PROJECT	SHEET NO.
	VA.	337	0337-133-101, PE-102 RW-202, C-502	2

DESIGN FEATURES RELATING TO CONSTRUCTION OR TO REGULATION AND CONTROL OF TRAFFIC MAY BE SUBJECT TO CHANGE AS DEEMED NECESSARY BY THE DEPARTMENT

Structural Practices
The structural practices to be used on this project are discussed below and are referenced to the respective Virginia Erosion and Sediment Control Handbook number.

1. Silt fence - 3.05
A temporary sediment barrier constructed of posts, filter fabric and, in some cases, a wire support fence, placed across or at the toe of a slope or in a minor drainage way to intercept and detain sediment and decrease flow velocities from drainage areas of limited size; applicable where sheet flow erosion or small concentrated flows may be a problem. Maximum effective life of 6 months.

2. Storm drain inlet protection - 3.07
The installation of various kinds of sediment trapping measures around drop inlets or curb inlet structures prior to permanent stabilization of the disturbed area; limited to drainage areas not exceeding one acre, and not intended to control large, concentrated storm water flows.

3. Rip Rap - 3.19
A permanent, erosion-resistant ground cover of large, loose, angular stone installed wherever soil conditions, water turbulence and velocity, expected vegetative cover, etc. are such that soil may erode under design flow conditions.

Vegetative Practices
The vegetative practices to be used on this project are discussed below and are referenced to the respective Virginia Erosion and Sediment Control Handbook number.

4. Topsoiling - 3.30
Preserving and using topsoil to provide a suitable growth medium for vegetation used to stabilize disturbed areas. Applicable where preservation or importation of topsoil is most cost-effective method of providing a suitable growth medium; not recommended for slopes steeper than 2:1 unless additional measures are taken to prevent sloughing and erosion.

5. Permanent seeding - 3.32
Establishment of perennial vegetative cover by planting seed on rough-graded areas that will not be brought to final grade for a year or more or where permanent, long-lived vegetative cover is needed on fine-graded areas.

6. Trees, shrubs, vines, and groundcovers - 3.37
Stabilizing disturbed areas by planting trees, shrubs, vines, and ground covers where turf is not preferred. These plant materials also provide food and shelter for wildlife as well as many other environmental benefits. Especially effective where ornamental plants are desirable and turf maintenance is difficult.

7. Tree preservation and protection - 3.38
Protecting existing trees from mechanical and other injury during land-disturbing and construction activity to ensure the survival of desirable trees where they will be effective for erosion and sediment control and provide other environmental and aesthetic benefits.

8. Dust control - 3.39
Reducing surface and air movement of dust during land disturbance, demolition, or construction activities in areas subject to dust problems in order to prevent soil loss and reduce the presence of potentially harmful airborne substance.

Measures to prevent and control dust during demolition, excavation, paving, grading and all other potential land disturbing activities shall be used during construction.

FINAL PLANS

PROJECT	SHEET NO.
0337-133-101	2

PROJECT MANAGER Sherry Earley P.E. City of Suffolk (757) 514-7703
SURVEYED BY EMI INC. (757) 368-0945
DESIGN SUPERVISED BY Ira Johnston P.E. Clark Nexsen (757) 455-5800
DESIGN BY Clark Nexsen (757) 455-5800

TYPICAL SECTIONS

REVISED	STATE	ROUTE	PROJECT	SHEET NO.
	VA.	337	0337-133-101, PE-102 RW-202, C-502	2A

DESIGN FEATURES RELATING TO CONSTRUCTION OR TO REGULATION AND CONTROL OF TRAFFIC MAY BE SUBJECT TO CHANGE AS DEEMED NECESSARY BY THE DEPARTMENT

VDOT (Division) or Co. Name (Location), Virginia (TECHNICAL DISCIPLINE) | VDOT (Division) or Co. Name (Location), Virginia (TECHNICAL DISCIPLINE)

TYPICAL ROUTE 337 - NANSEMOND PARKWAY

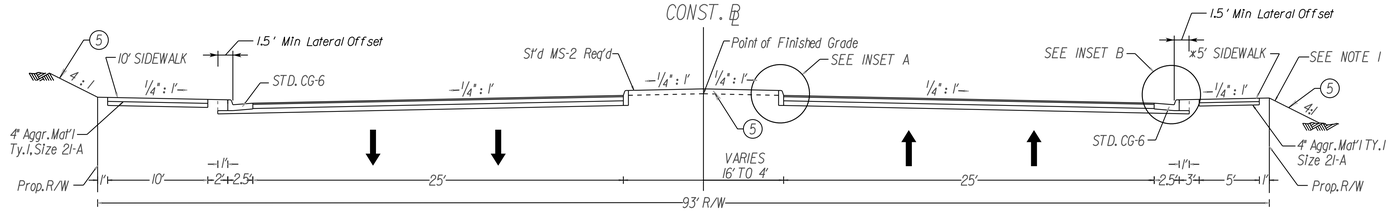

Sta. 10+75.00 to Sta. 17+50.00
Sta. 22+10.77 to Sta. 25+02.38
Sta. 29+67.38 to Sta. 31+67.38

*See plan sheet for locations of 1' sidewalk widening at CG-9D to accommodate 2% ADA access cross slope

Note 1

For fills less than 2' in height, use Select Type II, Min. CBR-20 material.

For fills greater than 2' in height, use Select Type II, Min. CBR-15 material capped with 12" of Select Type II, Min CBR-20 material.

All fills shall be placed over Embankment Stabilization Fabric (Spec. 245)

TYPICAL ROUTE 337 - NANSEMOND PARKWAY

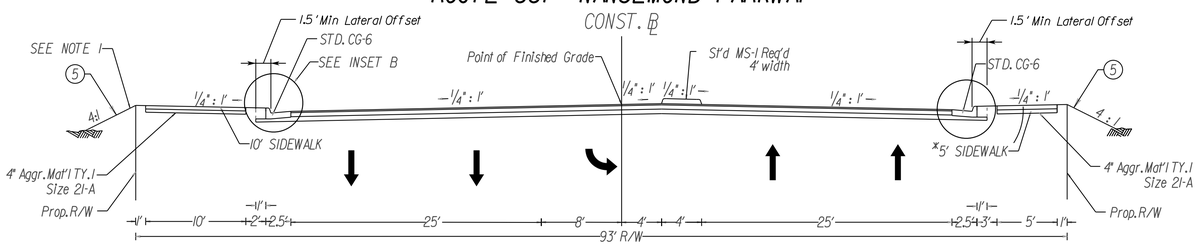

Sta. 20+10.77 to Sta. 22+10.77
Sta. 27+02.38 to Sta. 29+67.38

RIGHT TURN LANE ROUTE 337 - NANSEMOND PARKWAY

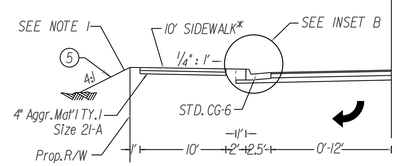

Sta. 20+10.77 to Sta. 23+18.70

1. 2" Asphalt Conc. Surface Course Ty. SM-9.5D
2. 2" Asphalt Conc. Ty. IM-19.0D
3. 4" Asphalt Conc. Base Course Ty. BM-25
4. 9" Aggr. Mat'l Ty. I, Size 21-A
5. Class 'A' Topsoil, min. Depth 2"

TYPICAL ROUTE 337 - NANSEMOND PARKWAY

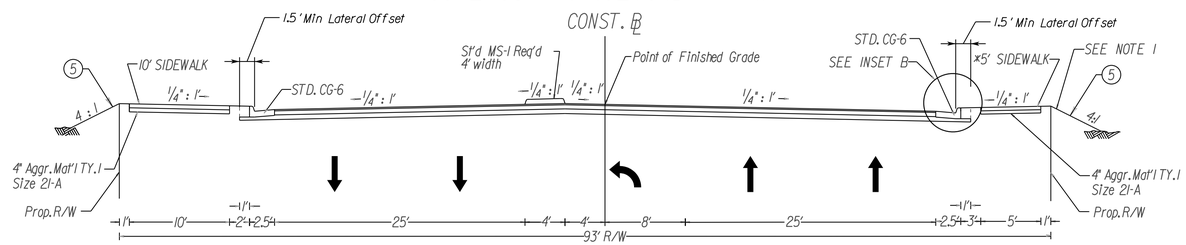

Sta. 17+50.00 to Sta. 20+10.77
Sta. 25+02.38 to Sta. 27+02.38

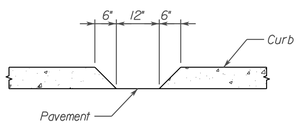

CURB SLOT DETAIL

NO SCALE

TYPICAL DITCH SECTION

NOTES:

1. SEE PLANS FOR LOCATION, INVERT ELEVATION, AND SLOPE.
2. DITCHES SHALL BE LINED WITH VDOT STD EC-2.

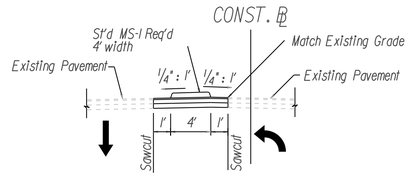

VDOT St'd MS-1A Const - Sta. 8+27.87 to Sta. 10+11.00

TYPICAL STRAIGHT-LINE TAPER LANE

Use with Curbs and/or Curb & Gutters

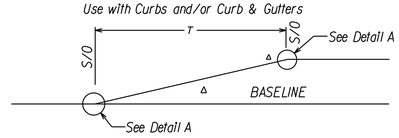

Detail A

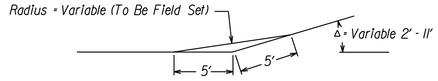

T - See plans for Length of T
S/O - See plans for Stations and Offsets

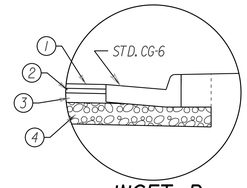

INSET B

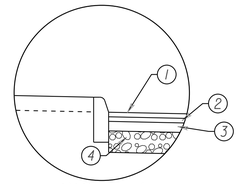

INSET A

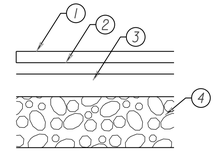

PAVEMENT SECTION

FINAL PLANS

PROJECT	SHEET NO.
0337-133-101	2A

PROJECT MANAGER Sherry Earley, P.E., City of Suffolk (757) 514-7703
SURVEYED BY EMJINC (757) 368-0945
DESIGN SUPERVISED BY Ina Johnston, P.E., Clark Nexsen (757) 455-5800
DESIGNED BY Clark Nexsen (757) 455-5800

DRAINAGE DESCRIPTION

(3-1) VDOT STD DI-3B REQ'D
RIM = 21.82', L=4'
INV OUT 17.90'
STD IS-1 REQ'D

(3-1) (3-2) 48' - 15" RCP REQ'D
SLOPE = 0.016 ft/ft
INV EL 17.90 (IN), 17.12 (OUT)

(3-2) VDOT STD DI-3C REQ'D
RIM = 21.79', L=6'
INV OUT 17.12
STD IS-1 REQ'D

(3-3) (3-4) 48' - 15" RCP REQ'D
SLOPE = 0.003 ft/ft
INV EL 17.90 (IN), 17.76 (OUT)

(3-3) VDOT STD DI-3B REQ'D
RIM = 21.82, L=4'
INV OUT 17.90
STD IS-1 REQ'D

(3-4) (3-2) 75' - 15" RCP REQ'D
SLOPE = 0.008 ft/ft
INV EL 17.76 (IN), 17.12 (OUT)

(3-5) VDOT STD DI-3B REQ'D
RIM = 21.84, L=4'
INV OUT 17.92
STD IS-1 REQ'D

(3-5) (3-4) 35' - 15" RCP REQ'D
SLOPE = 0.005 ft/ft
INV EL 17.92 (IN), 17.76 (OUT)

(3-4) VDOT STD DI-3C REQ'D
RIM = 21.79, L=6'
INV OUT 17.76
STD IS-1 REQ'D

(3-6) (3-5) 10' - 15" RCP REQ'D
SLOPE = 0.096 ft/ft
INV EL 18.88 (IN), 17.92 (OUT)

(3-6) VDOT STD 15" ES-1 REQ'D
INV OUT= 18.88
1.0 CU YDS ST'D EC-1, CLASS I REQ'D. LT. TYPE A INSTALLATION

(3-7) (3-2) 14' - 18" RCP REQ'D
SLOPE = 0.003 ft/ft
INV EL 18.94 (IN), 18.90 (OUT)

(3-7) VDOT STD 18" ES-1 REQ'D
INV OUT 18.94
1.5 CU YDS ST'D EC-1, CLASS I REQ'D LT TYPE A INSTALLATION

(3-2) (4-1) 78' - 24" RCP REQ'D
SLOPE = 0.004 ft/ft
INV EL 17.12 (IN), 16.80 (OUT)

(4-10) VDOT STD DI-7 REQ'D
GRATE A, TYPE I REQ'D
RIM = 20.55'
INV OUT 16.63
STD IS-1 REQ'D

(4-10) (5-18) 95' - 15" RCP REQ'D
SLOPE = 0.017 ft/ft
INV EL 16.63 (IN), 15.02 (OUT)

(4-11) VDOT STD DI-4B REQ'D
RIM=22.87, L=6'
INV OUT 15.58
STD IS-1 REQ'D

(4-3) (4-11) 117' - 30" RCP REQ'D
SLOPE = 0.003 ft/ft
INV EL 15.94 (IN), 15.58 (OUT)

(4-1) VDOT STD DI-3B REQ'D
RIM = 21.88', L=4'
INV OUT 16.80
STD IS-1 REQ'D

(4-1) (4-2) 203' - 24" RCP REQ'D
SLOPE = 0.003 ft/ft
INV EL 16.80 (IN), 16.19 (OUT)

(4-2) VDOT STD DI-3B REQ'D
RIM=22.51', L=4'
INV OUT 16.19
STD IS-1 REQ'D

(4-2) (4-3) 82' - 30" RCP REQ'D
SLOPE = 0.003 ft/ft
INV EL 16.19 (IN), 15.94 (OUT)

(4-3) VDOT STD DI-3B REQ'D
RIM=22.75', L=4'
INV OUT 15.94
STD IS-1 REQ'D

(4-5) VDOT STD 15" ES-1 REQ'D
INV OUT= 19.92
1.0 CU YDS STD EC-1, CLASS I REQ'D LT TYPE A INSTALLATION

(4-5) (4-3) 14' - 15" RCP REQ'D
SLOPE = 0.078 ft/ft
INV EL 19.92 (IN), 18.83 (OUT)

(4-4) VDOT STD 15" ES-1 REQ'D
INV OUT 19.66
1.0 CU YDS ST'D EC-1, CLASS I REQ'D LT TYPE A INSTALLATION

(4-4) (4-2) 14' - 15" RCP REQ'D
SLOPE = 0.076 ft/ft
INV EL 19.66 (IN), 18.59 (OUT)

(4-7) VDOT STD DI-3B REQ'D
RIM=22.51', L=4'
INV OUT 18.59
STD IS-1 REQ'D

(4-7) (4-8) 12' - 15" RCP REQ'D
SLOPE = 0.033 ft/ft
INV EL 18.59 (IN), 18.19 (OUT)

(4-6) VDOT STD 15" ES-1 REQ'D
INV OUT 20.02
1.0 CU YDS ST'D EC-1, CLASS I REQ'D LT TYPE A INSTALLATION

(4-6) (4-11) 14' - 15" RCP REQ'D
SLOPE = 0.076 ft/ft
INV EL 20.02 (IN), 18.95 (OUT)

(4-9) VDOT STD DI-7 REQ'D
GRATE A, TYPE I REQ'D
RIM = 22.13'
INV OUT 17.85
STD IS-1 REQ'D

(4-8) (4-9) 115' - 15" RCP REQ'D
SLOPE = 0.003 ft/ft
INV EL 18.19 (IN), 17.85 (OUT)

(4-8) VDOT STD DI-7 REQ'D
GRATE A, TYPE I REQ'D
RIM = 22.11'
INV OUT 18.19
STD IS-1 REQ'D

(4-9) (4-10) 92' - 15" RCP REQ'D
SLOPE = 0.013 ft/ft
INV EL 17.85 (IN), 16.63 (OUT)

(5-1) VDOT STD DI-4B REQ'D
RIM = 22.62', L=6'
INV OUT 15.28
STD IS-1 REQ'D

(4-11) (5-1) 97' - 36" RCP REQ'D
SLOPE = 0.003 ft/ft
INV EL 15.58 (IN), 15.28 (OUT)

(5-3) VDOT STD 15" ES-1 REQ'D
INV OUT= 18.89
1.0 CU YDS ST'D EC-1, CLASS I REQ'D LT TYPE A INSTALLATION

(5-1) (5-11) 75' - 42" RCP REQ'D
SLOPE = 0.003 ft/ft
INV EL 15.28 (IN), 15.08 (OUT)

(5-2) VDOT STD 15" ES-1 REQ'D
INV OUT 19.64
1.0 CU YDS ST'D EC-1, CLASS I REQ'D LT TYPE A INSTALLATION

(5-3) (5-7) 15' - 15" RCP REQ'D
SLOPE = 0.078 ft/ft
INV EL 18.89 (IN), 17.72 (OUT)

(5-5) VDOT STD 15" ES-1 REQ'D
INV OUT= 19.32'
1.0 CU YDS ST'D EC-1, CLASS I REQ'D LT TYPE A INSTALLATION

(5-4) (5-9) 14' - 15" RCP REQ'D
SLOPE = 0.092 ft/ft
INV EL 19.00 (IN), 17.71 (OUT)

(5-4) VDOT STD 15" ES-1 REQ'D
INV OUT 19.00'
1.0 CU YDS ST'D EC-1, CLASS I REQ'D LT TYPE A INSTALLATION

(5-7) (5-8) 11' - 15" RCP REQ'D
SLOPE = 0.018 ft/ft
INV EL 17.72 (IN), 17.52 (OUT)

(5-7) VDOT STD DI-3B REQ'D
RIM = 21.64, L=4'
INV OUT 17.72'
STD IS-1 REQ'D

(5-5) (5-10) 15' - 15" RCP REQ'D
SLOPE = 0.095 ft/ft
INV EL 19.32 (IN), 17.90 (OUT)

(5-6) VDOT STD DI-7 REQ'D
GRATE A, TYPE I REQ'D
RIM = 21.65
INV OUT 16.98'
STD IS-1 REQ'D

(5-6) (5-10) 78' - 24" RCP REQ'D
SLOPE = 0.003 ft/ft
INV EL 16.98 (IN), 16.75 (OUT)

(5-9) VDOT STD DI-3C REQ'D
RIM = 21.63, L=6'
INV OUT 16.51'
STD IS-1 REQ'D

(5-9) (5-8) 75' - 24" RCP REQ'D
SLOPE = 0.003 ft/ft
INV EL 16.51 (IN), 16.27 (OUT)

(5-8) VDOT STD 60" MH-1 OR MH-2 REQ'D
STD MH-1 FRAME & COVER REQ'D
RIM = 21.44'
INV OUT 16.27
STD IS-1 REQ'D

(5-10) (5-9) 79' - 24" RCP REQ'D
SLOPE = 0.003 ft/ft
INV EL 16.75 (IN), 16.51 (OUT)

(5-11) VDOT STD DI-4B REQ'D
RIM = 22.65', L=6'
INV OUT 15.08
STD IS-1 REQ'D

(5-11) (5-18) 16' - 42" RCP REQ'D
SLOPE = 0.004 ft/ft
INV EL 15.08 (IN), 15.02 (OUT)

(5-10) VDOT STD DI-3B REQ'D
RIM = 21.82', L=4'
INV OUT 16.75
STD IS-1 REQ'D

(5-12) VDOT STD DI-4E REQ'D
LESS THAN MINIMUM HEIGHT
RIM = 21.88', L=6'
INV OUT 16.13
STD IS-1 REQ'D

(5-22) (5-1) 149' - 30" RCP REQ'D
SLOPE = 0.005 ft/ft
INV EL 16.00 (IN), 15.28 (OUT)

(5-14) VDOT STD DI-3B REQ'D
RIM = 21.79', L=4'
INV OUT 17.87
STD IS-1 REQ'D

(5-8) (5-22) 89' - 30" RCP REQ'D
SLOPE = 0.003 ft/ft
INV EL 16.27 (IN), 16.00 (OUT)

(5-13) VDOT STD DI-3C REQ'D
RIM=21.72', L=6'
INV OUT 16.64
STD IS-1 REQ'D

(5-2) (5-22) 25' - 15" RCP REQ'D
SLOPE = 0.072 ft/ft
INV EL 19.64 (IN), 17.83 (OUT)

(5-15) VDOT STD 42" ES-1 REQ'D
INV OUT 14.87
1.3 CU YDS ST'D EC-1, CLASS I REQ'D LT TYPE A INSTALLATION

(5-16) (5-12) 62' - 60"X38" HERCP REQ'D
SLOPE = 0.001 ft/ft
INV EL 16.18 (IN), 16.13 (OUT)

(5-16) SPECIAL DESIGN ENDWALL
INV OUT 16.18
SEE SHEET 2D

(5-12) (5-19) 11' - 60"X38" HERCP REQ'D
SLOPE = 0.001 ft/ft
INV EL 16.13 (IN), 16.12 (OUT)

(5-17) VDOT STD DI-7 REQ'D
GRATE A, TYPE I REQ'D
RIM = 20.66'
INV OUT 16.74
STD IS-1 REQ'D

(5-19) (5-20) 78' - 60"X38" HERCP REQ'D
SLOPE = 0.001 ft/ft
INV EL 16.12 (IN), 16.05 (OUT)

(5-18) VDOT STD 72" MH-1 OR MH-2 REQ'D
STD MH-1 FRAME & COVER REQ'D
RIM = 22.20
INV OUT 15.02'
STD IS-1 REQ'D

(5-17) (5-23) 16' - 15" RCP REQ'D
SLOPE = 0.003 ft/ft
INV EL 16.74 (IN), 16.69 (OUT)

(5-19) VDOT STD 126" MH-2 REQ'D
STD IC-2 FRAME & COVER REQ'D
RIM = 21.69'
INV OUT 16.12
STD IS-1 REQ'D

(5-23) (5-13) 16' - 15" RCP REQ'D
SLOPE = 0.003 ft/ft
INV EL 16.69 (IN), 16.64 (OUT)

(5-20) VDOT STD 96" MH-2 REQ'D
STD IC-2 FRAME & COVER REQ'D
RIM = 21.54'
INV OUT 16.05
STD IS-1 REQ'D

(5-13) (5-20) 11' - 15" RCP REQ'D
SLOPE = 0.054 ft/ft
INV EL 16.64 (IN), 16.05 (OUT)

(5-21) VDOT STD 96" MH-2 REQ'D
STD IC-2 FRAME & COVER REQ'D
RIM = 21.66'
INV OUT 15.98
STD IS-1 REQ'D

(5-14) (5-21) 11' - 15" RCP REQ'D
SLOPE = 0.012 ft/ft
INV EL 17.87 (IN), 17.74 (OUT)

(5-22) VDOT STD 60" MH-1 OR MH-2 REQ'D
STD MH-1 FRAME & COVER REQ'D
RIM= 21.75'
INV OUT 16.00
STD IS-1 REQ'D

(5-20) (5-21) 62' - 60"x38" HERCP REQ'D
SLOPE = 0.001 ft/ft
INV EL 16.05 (IN), 15.98 (OUT)

(5-23) VDOT STD MH-1 OR MH-2 REQ'D
STD MH-1 FRAME & COVER REQ'D
RIM = 21.94'
INV OUT 16.69
STD IS-1 REQ'D

(5-18) (5-15) 37' - 42" RCP REQ'D
SLOPE = 0.003 ft/ft
INV EL 15.02 (IN), 14.87 (OUT)

(5-21) (6-5) 227' - 60"x38" HERCP REQ'D
SLOPE = 0.001 ft/ft
INV EL 15.98 (IN), 15.76 (OUT)

(6-8) (6-7) 19' - 15" RCP REQ'D
SLOPE = 0.003 ft/ft
INV EL 15.56 (IN), 15.50 (OUT)

(6-9) VDOT STD 96" REQ'D MH-2 REQ'D
STD MH-1 FRAME & COVER REQ'D
RIM = 21.50
INV OUT 15.47
STD IS-1 REQ'D

(6-5) (6-9) 290' - 60"x38" HERCP REQ'D
SLOPE = 0.001 ft/ft
INV EL 15.76 (IN), 15.47 (OUT)

(6-8) VDOT STD DI-7 REQ'D
GRATE B, TYPE III REQ'D
RIM = 20.70'
INV OUT 15.56
STD IS-1 REQ'D

(7-6) (7-11) 56' - 60"X38" HERCP REQ'D
SLOPE = 0.001 ft/ft
INV EL 15.27 (IN), 15.21 (OUT)

(6-9) (7-6) 193' - 60"X38" HERCP REQ'D
SLOPE = 0.001 ft/ft
INV EL 15.47 (IN), 15.27 (OUT)

(6-5) VDOT STD 96" MH-2 REQ'D
STD MH-1 FRAME & COVER REQ'D
RIM = 22.28'
INV OUT 15.76
STD IS-1 REQ'D

(7-8) (7-10) 21' - 15" RCP REQ'D
SLOPE = 0.026 ft/ft
INV EL 16.40 (IN), 15.42 (OUT)

(6-1) VDOT STD 18" ES-1 REQ'D
INV OUT= 18.57
1.5 CU YDS ST'D EC-1, CLASS I REQ'D LT TYPE A INSTALLATION

(6-2) (6-4) 214' - 30" RCP REQ'D
SLOPE = 0.003 ft/ft
INV EL 17.07 (IN), 16.41 (OUT)

(6-2) VDOT STD DI-3B REQ'D
RIM = 22.24, L=4'
INV OUT 17.07
STD IS-1 REQ'D

(6-1) (6-2) 14' - 18" RCP REQ'D
SLOPE = 0.036 ft/ft
INV EL 18.57 (IN), 18.07 (OUT)

(6-3) VDOT STD 15" ES-1 REQ'D
INV OUT= 18.71
1.0 CU YDS STD EC-1, CLASS I REQ'D LT TYPE A INSTALLATION

(6-4) (7-2) 111' - 30" RCP REQ'D
SLOPE = 0.003 ft/ft
INV EL 16.41 (IN), 16.06 (OUT)

(6-4) VDOT STD DI-3B REQ'D
RIM = 21.58', L=4'
INV OUT 16.41
STD IS-1 REQ'D

(6-3) (6-4) 15' - 15" RCP REQ'D
SLOPE = 0.070 ft/ft
INV EL 18.71 (IN), 17.66 (OUT)

(6-7) VDOT STD DI-2B REQ'D
RIM = 21.79', L=4'
INV OUT 15.50
STD IS-1 REQ'D

(6-6) (6-5) 22' - 15" RCP REQ'D
SLOPE = 0.051 ft/ft
INV EL 19.48 (IN), 18.36 (OUT)

(6-6) VDOT STD 15" ES-1 REQ'D
INV OUT= 19.48
1.0 CU YDS ST'D EC-1, CLASS I REQ'D LT TYPE A INSTALLATION

(6-7) (6-9) 9' - 18" RCP REQ'D
SLOPE = 0.004 ft/ft
INV EL 15.50 (IN), 15.47 (OUT)

(7-2) VDOT STD DI-3B REQ'D
RIM = 21.23', L=4'
INV OUT 16.06
STD IS-1 REQ'D

(7-2) (7-5) 95' - 30" RCP REQ'D
SLOPE = 0.004 ft/ft
INV EL 16.06 (IN), 15.65 (OUT)

(7-3) VDOT STD DI-2B REQ'D
RIM= 21.21', L=4'
INV OUT 17.29
STD IS-1 REQ'D

(7-3) (7-6) 9' - 15" RCP REQ'D
SLOPE = 0.036 ft/ft
INV EL 17.29 (IN), 16.97 (OUT)

(7-4) SPECIAL DESIGN ENDWALL
INV OUT 15.15
1.9 CU YDS ST'D EC-1, CLASS I REQ'D LT TYPE A INSTALLATION

(7-9) (7-10) 57' - 36" RCP REQ'D
SLOPE = 0.004 ft/ft
INV EL 15.65 (IN), 15.42 (OUT)

(7-5) VDOT STD 30" ES-1 REQ'D
INV OUT 15.65
1.0 CU YDS ST'D EC-1, CLASS I REQ'D LT TYPE A INSTALLATION

(7-10) (7-4) 65' - 36" RCP REQ'D
SLOPE = 0.004 ft/ft
INV EL 15.42 (IN), 15.15 (OUT)

(7-6) VDOT STD 96" MH-2 REQ'D
STD IC-2 FRAME & COVER REQ'D
RIM = 20.89'
INV OUT 15.27
STD IS-1 REQ'D

(7-1) VDOT STD DI-7 REQ'D
GRATE A, TYPE I REQ'D
RIM = 20.50'
INV OUT 16.58
STD IS-1 REQ'D

(7-1) (7-2) 16' - 15" RCP REQ'D
SLOPE = 0.033 ft/ft
INV EL 16.58 (IN), 16.06 (OUT)

(7-11) (7-4) 49' - 60"x38" HERCP REQ'D
SLOPE = 0.001 ft/ft
INV EL 15.21 (IN), 15.15 (OUT)

(7-8) VDOT STD DI-3B REQ'D
RIM = 21.80', L=4'
INV OUT 16.40
STD IS-1 REQ'D

(7-9) VDOT STD 36" ES-1 REQ'D
INV OUT 15.65

(7-10) VDOT STD MH-1 OR MH-2 REQ'D
STD MH-1 FRAME & COVER REQ'D
RIM = 21.60'
INV OUT 15.42
STD IS-1 REQ'D

(7-11) VDOT STD 96" MH-2 REQ'D
STD IC-2 FRAME & COVER REQ'D
RIM = 20.73'
INV OUT 15.21
STD IS-1 REQ'D

(3-8) 15' - 18" RCP REQ'D
INV EL 19.65 (IN), 19.56 (OUT)
(2) STD ES-1 REQ'D

(3-9) 15' - 18" RCP REQ'D
INV EL 19.31 (IN), 19.22 (OUT)
(2) STD ES-1 REQ'D

(3-10) 15' - 18" RCP REQ'D
INV EL 19.50 (IN), 19.22 (OUT)
(2) STD ES-1 REQ'D

(6-2) (6-2A) 99' - 30" RCP REQ'D
SLOPE = 0.00038 ft/ft
INV EL 17.07 (IN), 16.77 (OUT)

(6-2A) VDOT STD DI-3B REQ'D
RIM 21.93, L=4
INV OUT 16.77
STD IS-1 REQ'D

(6-2A) (6-4) 115' - 30" RCP REQ'D
SLOPE = 0.003 ft/ft
INV EL 16.77 (IN), 16.42

REVISED		STATE	ROUTE	PROJECT	SHEET NO.
		VA.	337	0337-133-101, PE-102 RW-202, C-502	2C

VDOT (Division) or Co. Name (Location), Virginia (TECHNICAL DISCIPLINE)

VDOT (Division) or Co. Name (Location), Virginia (TECHNICAL DISCIPLINE)

DESIGN FEATURES RELATING TO CONSTRUCTION OR TO REGULATION AND CONTROL OF TRAFFIC MAY BE SUBJECT TO CHANGE AS DEEMED NECESSARY BY THE DEPARTMENT

DRAINAGE

D-1 The horizontal location of all drainage structures shown on these plans is approximate only, with the exception of structures showing specific stations and storm sewer systems.

D-2 The horizontal location and invert elevations shown for proposed culverts and storm sewer outfall pipes are based on existing survey data and required design criteria. If, during construction, the culvert invert elevations shown on the plans are found to differ significantly from the elevations of the stream or swale in which the culvert or storm sewer outfall pipe is to be placed, the Engineer shall confer with, and get approval from, the applicable District Drainage Engineer before installing the culvert or storm sewer outfall pipe.

D-3 The "H" dimensions shown on the plans for drop inlets and junction boxes and the "L.F." dimensions shown for manholes are for estimating purposes and are based on the proposed invert elevations shown for the structure and the anticipated top (rim) elevation based on existing or proposed finished grade. The actual "H" or "L.F." dimensions are to be determined by the contractor from field conditions.

D-6 Pipes shall conform to any of the allowable types shown on sheet number 2C, within the applicable height of cover limitations.
For strength, sheet thickness, or class designation; available sizes; height of cover limitations; and other restrictions for a particular pipe type or height of cover, see the VDOT Road and Bridge Standard PC-1. Structural plate pipe may be substituted for corrugated pipe of the same size, provided the substitution complies with the applicable sections of the VDOT Road and Bridge Standards PC-1.

D-7 All pipe on this project shall be concrete. All concrete pipe is storm sewer pipe. For strength, sheet thickness, or class designation; available sizes; height of cover limitations and other restrictions for a particular pipe type or height of cover, see the applicable sections of the VDOT Road and Bridge Standards PC-1.

D-8 Where open joint pipe is to be used, no joint shall be opened a distance exceeding 25% of the spigot length. Sealing of the pipe joint shall be in accordance with Section 302 of the applicable VDOT Road and Bridge Specifications.

D-10 The proposed riprap may be omitted by the Engineer if the slope designated for placement of riprap is found to be comprised of solid rock or closely consolidated boulders with soundness, size and weight equal to, or exceeding, the specifications for the proposed riprap.

D-14 Proposed drop inlets with a height "H" less than standard minimum shown in the VDOT Road and Bridge Standards shall be considered and paid for as Standard Drop Inlets for the type specified.

D-16 When Standard CG-6 or CG-7 is specified on a radius (such as at a street intersection), the Engineer may approve a decrease in the cross slope of the gutter to facilitate proper drainage.

D-17 St'd SL-1 Safety slab locations are based on the assumed use of precast structures. If cast-in-place structures are utilized, and the interior chamber dimensions (length and width, or diameter) are less than 4 feet, the safety slabs shall not be installed.

FINAL PLANS

PROJECT	SHEET NO.
0337-133-101	2C

$TIME$ $STAMP$

PROJECT MANAGER Sherry Earley P.E. City of Suffolk (757) 514-7703
SURVEYED BY EMI INC. (757) 368-0945
DESIGN SUPERVISED BY Ian Johnston P.E. Clark Nexsen (757) 455-5800
DESIGNED BY Clark Nexsen (757) 455-5800

STORMWATER MANAGEMENT DETAILS

VDOT (Division) or Co. Name (Location), Virginia (TECHNICAL DISCIPLINE)	VDOT (Division) or Co. Name (Location), Virginia (TECHNICAL DISCIPLINE)

REVISED	STATE	ROUTE	PROJECT	SHEET NO.
	VA.	337	0337-133-101, PE-102 RW-202, C-502	2D

DESIGN FEATURES RELATING TO CONSTRUCTION OR TO REGULATION AND CONTROL OF TRAFFIC MAY BE SUBJECT TO CHANGE AS DEEMED NECESSARY BY THE DEPARTMENT

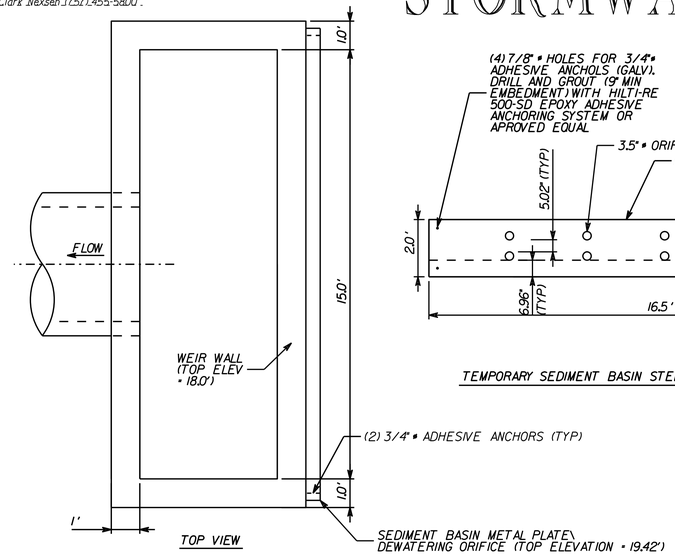

TOP VIEW

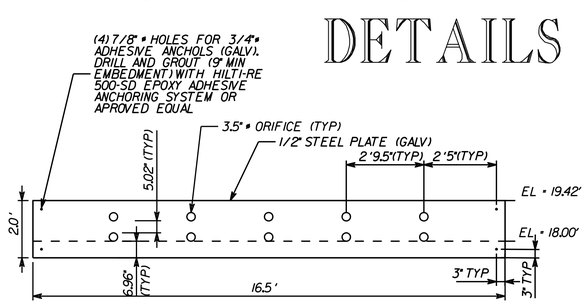

TEMPORARY SEDIMENT BASIN STEEL PLATE DEWATERING ORIFICE

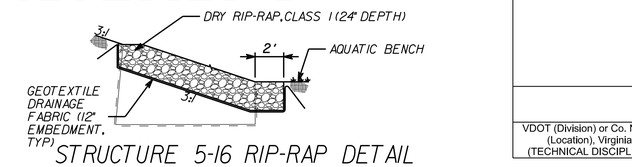

STRUCTURE 5-16 RIP-RAP DETAIL

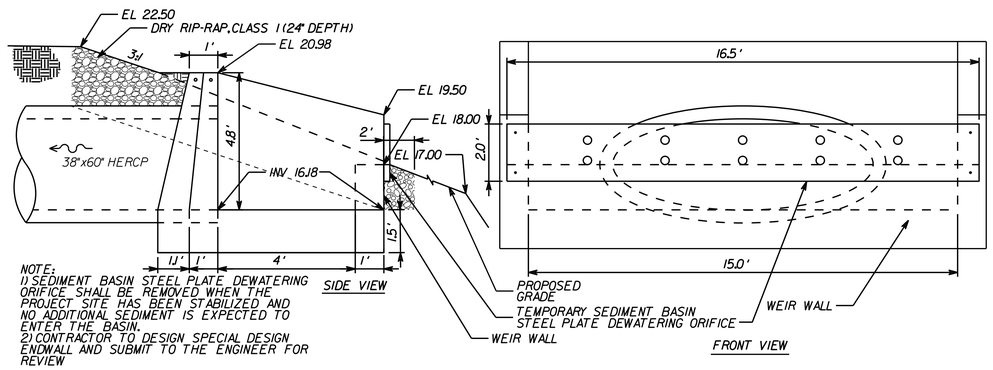

NOTE:
1) SEDIMENT BASIN STEEL PLATE DEWATERING ORIFICE SHALL BE REMOVED WHEN THE PROJECT SITE HAS BEEN STABILIZED AND NO ADDITIONAL SEDIMENT IS EXPECTED TO ENTER THE BASIN.
2) CONTRACTOR TO DESIGN SPECIAL DESIGN ENDWALL AND SUBMIT TO THE ENGINEER FOR REVIEW

SPECIAL DESIGN ENDWALL - STORM WATER POND OUTFALL

NO SCALE

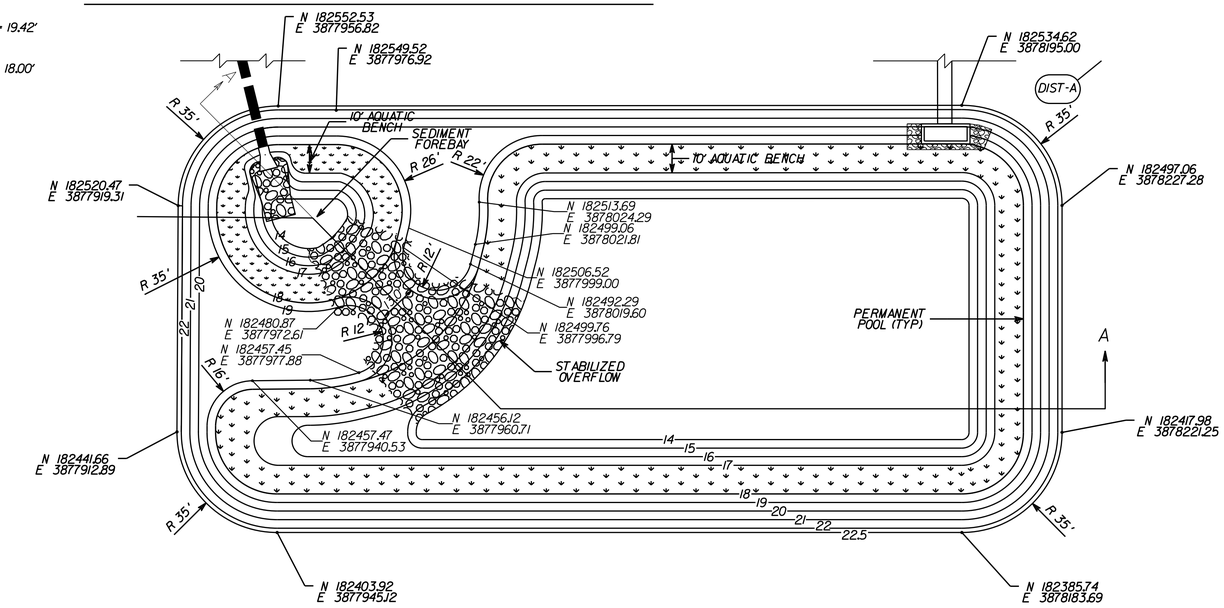

PLAN VIEW - WET STORAGE POND

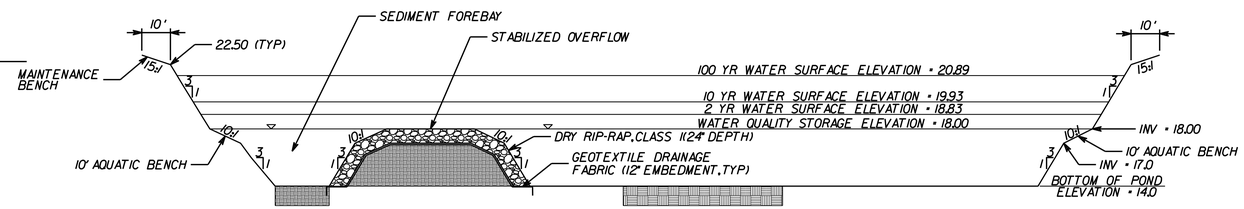

CROSS SECTION VIEW - WET STORAGE POND

SECTION 'A' - 'A'

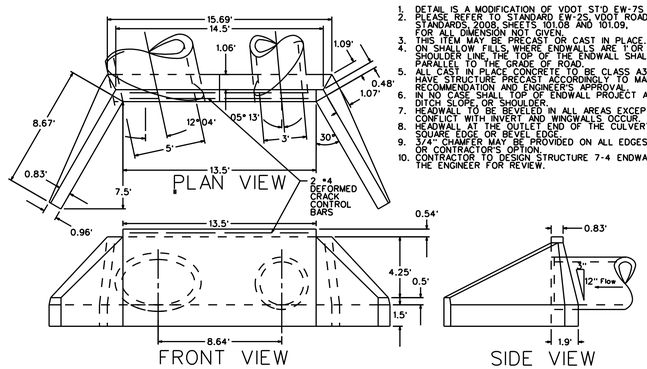

1. DETAIL IS A MODIFICATION OF VDOT ST'D EW-7S.
2. PLEASE REFER TO STANDARD EW-2S, VDOT ROAD AND BRIDGE STANDARDS, 2008, SHEETS 101.08 AND 101.09, FOR ALL DIMENSION NOT GIVEN.
3. THIS ITEM MAY BE PRECAST OR CAST IN PLACE.
4. ON SHALLOW FILLS, WHERE ENDWALLS ARE 1' OR LESS BELOW SHOULDER LINE, THE TOP OF THE ENDWALL SHALL BE CONSTRUCTED PARALLEL TO THE GRADE OF ROAD.
5. ALL CAST IN PLACE CONCRETE TO BE CLASS A3. CONTRACTOR MAY HAVE STRUCTURE PRECAST ACCORDINGLY TO MANUFACTURER'S RECOMMENDATION AND ENGINEER'S APPROVAL.
6. IN NO CASE SHALL TOP OF ENDWALL PROJECT ABOVE FILL SLOPE, DITCH SLOPE, OR SHOULDER.
7. HEADWALL TO BE BEVELED IN ALL AREAS EXCEPT WHERE A CONFLICT WITH INVERT AND WINGWALLS OCCUR.
8. HEADWALL AT THE OUTLET END OF THE CULVERT MAY BE EITHER SQUARE EDGE OR BEVEL EDGE.
9. 3/4" CHAMFER MAY BE PROVIDED ON ALL EDGES AT MANUFACTURER'S OR CONTRACTOR'S OPTION.
10. CONTRACTOR TO DESIGN STRUCTURE 7-4 ENDWALL AND SUBMIT TO THE ENGINEER FOR REVIEW.

STRUCTURE 7-4 ENDWALL DETAIL

NO SCALE

FINAL PLANS

HORIZONTAL SCALE
0 25' 50'

VERTICAL SCALE
0 5' 10'

PROJECT	SHEET NO.
0337-133-101	2D

PROJECT MANAGER Sherry Earley, P.E., City of Suffolk (757) 514-7703
SURVEYED BY EMI, INC. (757) 368-0945
DESIGN SUPERVISED BY Ian Johnston, P.E., Clark Nexsen (757) 455-5800
DESIGNED BY Clark Nexsen (757) 455-5800

SUMMARY SHEET

REVISED	STATE	ROUTE	PROJECT	SHEET NO.
	VA.	337	0337-133-101, PE-102 RW-202, C-502	2E

DESIGN FEATURES RELATING TO CONSTRUCTION OR TO REGULATION AND CONTROL OF TRAFFIC MAY BE SUBJECT TO CHANGE AS DEEMED NECESSARY BY THE DEPARTMENT

VDOT (Division) or Co. Name (Location), Virginia (TECHNICAL DISCIPLINE)

VDOT (Division) or Co. Name (Location), Virginia (TECHNICAL DISCIPLINE)

INCIDENTAL SUMMARY

SHEET NO.	MOBILIZATION	CONSTRUCTION SURVEYING	UTILITY COORDINATOR	FIELD OFFICE TYPE I	CLEARING AND GRUBBING	ASPHALT CONCRETE (SM-9.5A)	ASPHALT CONCRETE (IM-19.0)	ASPHALT CONCRETE (BM-25.0)	AGGREGATE BASE MATERIAL (TYPE 1, NO. 21B)	GEOTEXTILE FABRIC (SUBGRADE STABILIZATION)	ENTRANCE GUTTER CG-13	DEMOLITION OF PAVEMEMENT (FLEXIBLE)	DEMOLITION OF PAVEMEMENT (RIGID)	REMOVAL OF EXISTING PIPE	REMOVAL OF EXISTING STORM STRUCTURE	RELOCATE MAILBOX	STD. CURB CG-2	STD. COMB. CURB & GUTTER CG-6	CG-12 DETECTABLE WARNING SURFACE	ENTRANCE GUTTER CG-9D	SAW CUT	HYDRAULIC CEMENT CONCRETE SIDEWALK 4"	STD. MS-1 MEDIAN STRIP	RIGHT OF WAY MONUMENTS (STEEL PINS)
	LS	LS	LS	MO	LS	TONS	TONS	TONS	TONS	SY	SY	SY	SY	LF	EA	EA	LF	LF	SY	SY	LF	SY	SY	EA
3						234	259	517	1220	2348	0	1093	25	54	0	0	649	591	19	168	93	485	82	7
4						507	540	1080	2552	4909	0	1450	57	248	0	3	700	709	0	518	0	700	67	13
5						440	474	947	2238	4304	0	1956	0	402	1	5	430	814	45	282	70	633	111	13
6						378	414	828	1956	3763	476	2678	1	511	5	7	362	802	8	264	530	663	59	8
7						145	165	329	776	1492	87	672	0	186	3	1	401	249	0	46	100	235	30	5
Total	**0.4**	**0.4**	**0.4**	**7**	**0.1**	**1,704**	**1,852**	**3,701**	**8,742**	**16,816**	**563**	**7,849**	**83**	**1,401**	**9**	**16**	**2,542**	**3,165**	**72**	**1,278**	**793**	**2,716**	**349**	**46**

FINAL PLANS

PROJECT	SHEET NO.
0337-133-101	2E

PROJECT MANAGER Sherry Earley P.E. City of Suffolk (757) 514-7703
SURVEYED BY EMI INC. (757) 368-0945
DESIGN SUPERVISED BY Ina Johnston P.E. Clark Nexsen (757) 455-5800
DESIGN BY Clark Nexsen (757) 455-5800

SUMMARY SHEET

REVISED	STATE	ROUTE	PROJECT	SHEET NO.
	VA.	337	0337-133-101, PE-102 RW-202, C-502	2E(1)

DESIGN FEATURES RELATING TO CONSTRUCTION OR TO REGULATION AND CONTROL OF TRAFFIC MAY BE SUBJECT TO CHANGE AS DEEMED NECESSARY BY THE DEPARTMENT

VDOT (Division) or Co. Name (Location), Virginia (TECHNICAL DISCIPLINE)

VDOT (Division) or Co. Name (Location), Virginia (TECHNICAL DISCIPLINE)

INAGE SUMM	15" CONCRETE PIPE	18" CONCRETE PIPE	24" CONCRETE PIPE	30" CONCRETE PIPE	36" CONCRETE PIPE	42" CONCRETE PIPE	ELLIPTICAL CONCRETE PIPE 60"X38"	15" END SECTION ES-1	18" END SECTION ES- 1	30" END SECTION ES-1	36" END SECTION ES-1	42" END SECTION ES-1	DROP INLET DI-2B L=4'	DROP INLET DI-3B, L=4'	DROP INLET DI-3C, L=6'	DROP INLET DI-4B, L=6'	DROP INLET DI-4E, L=6'	DROP INLET DI-7	MANHOLE MH-1 OR 2	MANHOLE MH- 2	FRAME & COVER, MH-1	FRAME & COVER, IC-2	OUTLET PROTECTION, EC-1	BEDDING MATERIAL	REINFORCING STEEL (SPECIAL DESIGN ENDWALL)	CONCRETE CLASS A3 (SPECIAL DESIGN ENDWALL)	STORMWATER MANAGEMENT BASIN EXCAVATION
	LF	LF	LF	LF	LF	LF	LF	EA	EA	EA	EA	EA	EA	EA	EA	EA	EA	EA	LF	LF	EA	EA	CY	CY	LB	CY	CY
3-1														1													
3-1 to 3-2	48																										
3-2															1												
3-3 to 3-4	48																										
3-3														1													
3-4 to 3-2	75																										
3-5														1													
3-5 to 3-4	35																										
3-4															1												
3-6 to 3-5	10																										
3-6								1															1				
3-7 to 3-2		14																									
3-7									1														1.5				
3-2 to 4-1			78																								
4-10																		1									
4-10 to 5-18	95																										
4-11																1											
4-3 to 4-11				117																							
4-1														1													
4-1 to 4-2			203																								
4-2														1													
4-2 to 4-3				82																							
4-3														1													
4-5								1															1				
4-5 to 4-3	14																										
4-4								1															1				
4-4 to 4-2	14																										
4-7														1													
4-7 to 4-8	12																										
4-6								1															1				
4-6 to 4-11	14																										
4-9																		1									
4-8 to 4-9	115																										
4-8																		1									
4-9 to 4-10	92																										
5-1																1											
4-11 to 5-1					97																						
5-3								1															1				
5-1 to 5-11						75																					
5-2								1															1				
5-3 to 5-7	15																										
5-5								1															1				
5-4 to 5-9	14																										
5-4								1															1				
5-7 to 5-8	11																										
5-7														1													
5-5 to 5-10	15																										
5-6																		1									
5-6 to 5-10			78																								
5-9															1												
5-9 to 5-8			75																								
5-8																			5		1						
5-10 to 5-9			79																								
5-11																1											
5-11 to 5-18						16																					
5-10														1													
5-12																	1										
5-22 to 5-1				149														1									
5-14														1													
5-8 to 5-22				89																							

INAGE SUMM	15" CONCRETE PIPE	18" CONCRETE PIPE	24" CONCRETE PIPE	30" CONCRETE PIPE	36" CONCRETE PIPE	42" CONCRETE PIPE	ELLIPTICAL CONCRETE PIPE 60"X38"	15" END SECTION ES-1	18" END SECTION ES- 1	30" END SECTION ES-1	36" END SECTION ES-1	42" END SECTION ES-1	DROP INLET DI-2B L=4'	DROP INLET DI-3B, L=4'	DROP INLET DI-3C, L=6'	DROP INLET DI-4B, L=6'	DROP INLET DI-4E, L=6'	DROP INLET DI-7	MANHOLE MH-1 OR 2	MANHOLE MH- 2	FRAME & COVER, MH-1	FRAME & COVER, IC-2	OUTLET PROTECTION, EC-1	BEDDING MATERIAL	REINFORCING STEEL (SPECIAL DESIGN ENDWALL)	CONCRETE CLASS A3 (SPECIAL DESIGN ENDWALL)	STORMWATER MANAGEMENT BASIN EXCAVATION
	LF	LF	LF	LF	LF	LF	LF	EA	EA	EA	EA	EA	EA	EA	EA	EA	EA	EA	LF	LF	EA	EA	CY	CY	LB	CY	CY
5-13																1											
5-2 to 5-22	25																										
5-15												1											13				
5-16 to 5-12							62																				
5-16																									1450	14	11000
5-12 to 5-19							11																				
5-17																			1								
5-19 to 5-20							78																				
5-18																				6		1					
5-17 to 5-23	16																										
5-19																				10.5		1					
5-23 to 5-13	16																										
5-20																				8		1					
5-13 to 5-20	11																										
5-21																				8		1					
5-14 to 5-21	11																										
5-22																				5		1					
5-20 to 5-21							62																				
5-23																				4		1					
5-18 to 5-15						37																					
5-21 to 6-5							227																				
6-8 to 6-7	19																										
6-9																				8		1					
6-5 to 6-9							290																				
6-8																			1								
7-6 to 7-11							56																				
6-9 to 7-6							193																				
6-5																				8		1					
7-8 to 7-10	21																										
6-1										1													1.5				
6-2 to 6-4				214																							
6-2													1														
6-1 to 6-2		14																									
6-3									1														1				
6-4 to 7-2				111																							
6-4													1														
6-3 to 6-4	15																										
6-7												1															
6-6 to 6-5	22																										
6-6									1														1				
6-7 to 6-9		9																									
7-2													1														
7-2 to 7-5				95																							
7-3												1															
7-3 to 7-6	9																										
7-4																							19		600	7	
7-9 to 7-10					57																						
7-5											1												10				
7-10 to 7-4					65																						
7-6																				8		1					
7-1																			1								
7-1 to 7-2	16																										
7-11 to 7-4							49																				
7-8													1														
7-9											1																
7-10																				4		1					
7-11																					8		1				
3-8	15									2																	
3-9	15									2																	
3-10	15									2																	
6-2 to 6-2A				99																							
6-2A													1														
6-4 to 6-2A				115																							
Total	**853**	**37**	**513**	**1,071**	**219**	**128**	**1,028**	**10**	**8**	**1**	**1**	**1**	**2**	**15**	**4**	**3**	**1**	**8**	**24**	**59**	**7**	**5**	**55**	**0**	**2,050**	**21**	**11,000**

FINAL PLANS

PROJECT	SHEET NO.
0337-133-101	2E(1)

PROJECT MANAGER
SURVEYED BY, DATE
DESIGN BY
SUBSURFACE UTILITY BY, DATE

REVISED	STATE	STATE ROUTE	STATE PROJECT	SHEET NO.
	VA.	337	0337-133-101, PE-102 RW-202, C-502	2F

DESIGN FEATURES RELATING TO CONSTRUCTION OR TO REGULATION AND CONTROL OF TRAFFIC MAY BE SUBJECT TO CHANGE AS DEEMED NECESSARY BY THE DEPARTMENT

ROADSIDE DEVELOPMENT

CORE MIX

MIX	LBS./ ACRES	DESCRIPTION
1	▲	✳ 100% CERTIFIED FINE FESCUE
2	▲	100% CERTIFIED TALL FESCUE
3	▲	50% CERTIFIED TALL FESCUE ✳ 50% CERTIFIED FINE FESCUE
4	▲	50% ORCHARDGRASS 50% CERTIFIED KENTUCKY BLUEGRASS
5	▲	100% BERMUDAGRASS
TEMPORARY		
3/1 - 5/16 and	50	50% CERTIFIED TALL FESCUE
8/16 - 3/1	50	50% BARLEY, WINTER RYE OR WINTER WHEAT
5/16 - 8/16	50	50% FOXTAIL MILLET
	50	50% CERTIFIED TALL FESCUE

▲ ALL RATES TO BE SPECIFIED BY THE DISTRICT ROADSIDE MANAGER

✳ FINE FESCUES INCLUDE CHEWINGS, CREEPING RED, HARD, SHEEP

ADDITIVES

TYPE	LBS./ ACRES	DESCRIPTION
A	▲	100% LOVEGRASS
B	▲	100% BARLEY, WINTER RYE OR WINTER WHEAT
C	▲	100% FOXTAIL MILLET
D	▲	100% ANNUAL RYEGRASS
E	▲	100% CROWNVETCH (LEGUME)
F	▲	100% SERICEA LESPEDEZA (LEGUME)
G	▲	100% BIRDSFOOT TREFOIL (LEGUME)
H	▲	
I	▲	
J	▲	
K	▲	

SECTION OF SEED LOCATIONS

NOTES:

APPROXIMATELY 8.16 ACRES WILL BE DISTURBED ON THIS PROJECT AND WILL REQUIRE THE ESTABLISHMENT OF GRASSES AND/OR LEGUMES.

☆ NOTES FOR FIELD USE ONLY

OVERSEEDING RATES SHALL BE 100 PERCENT OF THE SEED MIXTURE SUPPLIED WITHOUT FERTILIZER.

THE ENGINEER WILL REQUIRE THE CONTRACTOR TO PERFORM SUPPLEMENTAL SEEDING WHEN LESS THAN 75 PERCENT UNIFORM STAND OF THE PERMANENT GRASS SPECIFIED IN THE MIXTURES IS OBTAINED. (ANNUAL SPECIES SUCH AS, RYE AND MILLET ARE TEMPORARY VARIETIES AND REQUIRE SUPPLEMENTAL SEEDING.)

NOTES APPLY TO SCHEDULE

LEGUME SEED MIXES (BIRDSFOOT TREFOIL, CROWNVETCH, AND SERICEA LESPEDEZA) AND WEEPING LOVEGRASS SHALL NOT BE USED ON SHOULDERS AND OTHER LOCATIONS FLATTER THAN 3:1 SLOPE.

LEGUME SEED SHALL BE INOCULATED WITH THE APPROPRIATE STRAIN AND RATE OF BACTERIA. FOR HYDROSEEDING, USE FIVE TIMES THE DRY SEEDING RATE OF INOCULATE.

A TEMPORARY MIX OR EROSION CONTROL MULCH, AS DIRECTED BY THE ENGINEER, IS TO BE USED ONLY ON AREAS THAT ARE TO BE REGRADED OR LATER DISTURBED, IF LEFT DORMANT FOR MORE THAN 15 DAYS.

EROSION CONTROL MULCH, AS DIRECTED BY THE ENGINEER, IS TO BE USED ON AREAS THAT ARE TO BE LEFT DORMANT FOR MORE THAN 15 DAYS BETWEEN DECEMBER 1 AND FEBRUARY 28.

EROSION CONTROL MULCH, AS LISTED ON THE VDOT APPROVED PRODUCTS LIST, SHALL BE APPLIED IN ACCORDANCE WITH THE MANUFACTURER'S RECOMENDATIONS.

EROSION CONTROL MULCH SHALL PROVIDE 100 PERCENT COVERAGE OF ALL DENUDED AREAS .

SPRING & SUMMER AND FALL & WINTER DEFINED FOR THE PURPOSE OF DETERMINING WHETHER HULLED OR UNHULLED BERMUDAGRASS AND SERICEA LESPEDEZA SEED IS REQUIRED:

SPRING & SUMMER 4/1 - 9/15 - USE HULLED SEED
FALL & WINTER 9/15 - 4/1 - USE UNHULLED SEED

TYPE I MULCH (STRAW) TO BE USED ON NEWLY SEEDED AREAS ADJACENT TO ALL WATERWAYS, WETLANDS, SWAMPS, OR ANY AREA IN WHICH DRAINAGE FLOWS TOWARD AREAS UNDER THE JURISDICTION OF THE ENVIRONMENTAL REGULATORY AGENCIES.

TYPE I MULCH SHALL BE APPLIED TO PROVIDE A MINIMUM 90 PERCENT COVERAGE.

TYPE I MULCH SHALL BE TACKED WITH FIBER MULCH AT THE RATE OF 750 LBS. PER ACRE AND/OR MULCH TACKIFIER.

TYPE II MULCH (FIBER MULCH) MAY BE SUBSTITUTED FOR TYPE I MULCH AT THE RECOMMENDATION OF THE DISTRICT ROADSIDE MANAGER.

TYPE II MULCH SHALL BE APPLIED AT A RATE OF 1500 LBS. (NET DRY WEIGHT) PER ACRE TO PROVIDE A MINIMUM OF 90 PERCENT COVERAGE, AND SHALL BE APPLIED IN A SEPARATE APPLICATION.

ALL TOPSOIL IS TO BE FREE OF HARD LUMPS, CLODS, ROCKS AND FOREIGN DEBRIS AND IS TO BE HAND RAKED TO TIE INTO EXISTING LAWNS.

ALL SEED MUST BE IN CONFORMANCE WITH VDOT SEED SPECIFICATIONS FOR GRASSES & LEGUMES AND BE PROVIDED AT THE PROJECT SITE IN BAGS NOT OPENED AND LABELED FOR USE ON VDOT PROJECTS WITH A GREEN TAG CERTIFYING INSPECTION BY THE VIRGINIA CROP IMPROVEMENT ASSOCIATION.

ROADSIDE DEVELOPMENT SUMMARY

PROJECT NUMBERS	⊗ TOPSOIL 2" CLASS A | B	REGULAR SEED	OVER SEEDING	LIME	FERT. 15-30-15	LEGUME SEED	LEGUME OVER SEEDING	TEMPORARY SEEDING	
	ACRES	LBS.	LBS.	TONS	TONS	LBS.	LBS.	LBS.	
0337-133-101, PE-102 RW-202, C-502	2.00	480	240	8	1				
TOTALS									

⊗ DENOTES ITEM(S) TO BE PAID FOR ON THE BASIS OF PLAN QUANTITIES IN ACCORDANCE WITH THE APPLICABLE PROVISIONS OF THE CURRENT ROAD AND BRIDGE SPECIFICATIONS.

SEEDING SCHEDULE

	SLOPES SEED MIX WITH ADDITIVE	MOWED SEED MIX WITH ADDITIVE	SLOPES SEED MIX WITH ADDITIVE	MOWED SEED MIX WITH ADDITIVE	SLOPES SEED MIX WITH ADDITIVE	MOWED SEED MIX WITH ADDITIVE
	SPRING MONTH & DATE 4/1 - 6/1		SUMMER MONTH & DATE 6/1 - 9/15		FALL & WINTER MONTH & DATE 9/15 - 4/1	
PROJECT NUMBERS 0337-133-101, PE-102 RW-202, C-502	2.5D	2.5D	2.5	2.5	2.5D	2.5D
✳ SPECIFY KIND OF FINE FESCUE						

MIX REQUIREMENTS THIS PROJECT

RECOMMENDATIONS FOR THE APPLICATION OF SEED MIXTURES (CORE MIX AND ADDITIVES), FERTILIZER, LIME, ETC. ARE TO BE OBTAINED FROM THE DISTRICT ROADSIDE MANAGER.

FINAL PLANS

	PROJECT	SHEET NO.
	0337-133-101	2F

PROJECT MANAGER Sherry Earley P.E. City of Suffolk (757) 514-7703
SURVEYED BY EMI INC. (757) 368-0945
DESIGN SUPERVISED BY Ina Johnston P.E. Clark Nexsen (757) 455-5800
DESIGNED BY Clark Nexsen (757) 455-5800

EROSION CONTROL DETAILS

REVISED	STATE	ROUTE	STATE PROJECT	SHEET NO.
	VA.	337	0337-133-101, PE-102 RW-202, C-502	2G

DESIGN FEATURES RELATING TO CONSTRUCTION OR TO REGULATION AND CONTROL OF TRAFFIC MAY BE SUBJECT TO CHANGE AS DEEMED NECESSARY BY THE DEPARTMENT

VDOT (Division) or Co. Name (Location), Virginia (TECHNICAL DISCIPLINE)

VDOT (Division) or Co. Name (Location), Virginia (TECHNICAL DISCIPLINE)

TABLE 3.32-E
(Revised June 2003)
PERMANENT SEEDING SPECIFICATIONS FOR COSTAL PLAIN AREA

SEED		
LAND USE	SPECIES	APPLICATION RATES
Minimum Care Lawn (Commercial or Residential)	Tall Fescue[1] or Bermudagrass[1]	175-200 lbs. 75 lbs.
High-Maintenance Lawn	Tall Fescue[1] or Bermudagrass[1] (seed) or Bermudagrass[1] (by other vegetative establishment method, see Std. & Spec. 3.34)	200-250 lbs. 40 lbs. (unhulled) 30 lbs. (hulled)
General Slope (3:1 or less)	Tall Fescue[1] Red Top Grass or Creeping Red Fescue Seasonal Nurse Crop[2]	128 lbs. 2 lbs. 20 lbs. Total: 150 lbs.
LOW-Maintenance Slope (Steeper Than 3:1)	Tall Fescue[1] Bermudagrass[1] Red Top Grass or Creeping Red Fescue Seasonal Nurse Crop[2] Sericea Lespedeza[3]	93-108 lbs. 0-15 lbs. 2 lbs. 20 lbs. 20 lbs. Total: 150 lbs.

1- When selecting varieties of turfgrass, use the Virginia Crop Improvement Association (VCIA) recommended turfgrass variety list. Quality seed will bear a label indicating that they are approved by VCIA. A current turfgrass variety list is available at the local County Extension office or through VCIA at 804-746-4884 or at http://sudan.cses.vt.edu/html/Turf/turf/publications/publications2/html

2- Use seasonal nurse crop in accordance with seeding dates as listed below:

February, March - April	Annual Rye
May 1st - August	Foxtail Millet
September, October - November 15th	Annual Rye
November 16th - January	Winter Rye

3- May through October, use hulled seed. All other seeding periods, use unhulled seed. If weeping lovegrass is used, including in any slope or low maintenance mixture during warmer seeding periods, increase to 30-40 lbs/acre.

FERTILIZER & LIME

- Apply 10-20-10 fertilizer at a rate of 500 lbs./acre (or 12 lbs./1,000 sq. ft.)
- Apply Pulverized Agricultural Limestone at a rate of 2 tons/acre (or 90 lbs./1,000 sq. ft.)

NOTE:
-A soil test is necessary to determine the actual amount of lime required to adjust the soil pH of the site.
-Incorporate the lime and fertilizer into the top 4-6 inches of the soil by disking or by other means.
-When applying Slowly Available Nitrogen, use rates available in Erosion & Sediment Control Technical Bulletin #4, 2003 Nutrient Management for Development Sites at http://www.dcr.state.va.us/sw/e&s.html#pubs

TABLE 3.31-B
(Revised June 2003)
TEMPORARY SEEDING SPECIFICATIONS
QUICK REFERENCE FOR ALL REGIONS

SEED		
APPLICATION DATES	SPECIES	APPLICATION RATES
Sept. 1-Feb. 15	50/50 Mix of Annual Ryegrass (Iolium multi-florum) & Cereal (Winter) Rye (Secale cereale)	50-100 (lbs/acre)
Feb. 16-Apr. 30	Annual Ryegrass (Iolium multi-florum)	60-100 (lbs/acre)
May. 1-Aug. 31	German Millet	50 (lbs/acre)

FERTILIZER & LIME

- Apply 10-10-10 FERTILIZER at a rate 450 lbs./acre (or 10 lbs./1,000sq ft
- Apply PULVERIZED AGRICULTURAL LIMESTONE at a rate of 2 tons/acre (or 90 lbs./1,000 sq ft)

NOTE:
1 - A soil test os necessary to determine the actual amount of lime required to adjust the soil pH of site.
2 - Incorporate the lime and fertilizer into the top 4-6 inches of the soil by disking or by other means.
3 - When applying Slowly Available Nitrogen, use rates available in Erosion & sediment Control Technical Bulletin #4, 2003 Nutrient Management for Development Sties at http:/www.dcr.state.va.us/sw/e&s.htm#pubs

TREE PROTECTION SPECIFICATIONS

PART 1 - GENERAL

A. TREES THAT ARE TO BE PRESERVED ON-SITE SHALL BE PROTECTED DURING CONSTRUCTION IN ACCORDANCE WITH THE FOLLOWING:

1. TREES SELECTED FOR PRESERVATION ARE SHOWN ON THE SITE PLAN AND SHALL BE CLEARLY MARKED IN THE FIELD BY THE CONTRACTOR.
2. TREES AND GROUPS OF TREES THAT ARE TO BE PRESERVED SHALL BE ENCLOSED BY A TEMPORARY FENCE TO BE LOCATED AND MAINTAINED 18 INCHES OUTSIDE OF THEIR DRIPLINES DURING CONSTRUCTION. SUCH A FENCE SHALL BE INSTALLED PRIOR TO CLEARING OR CONSTRUCTION AND SHALL BE SUFFICIENT TO PREVENT INTRUSION INTO THE FENCED AREA DURING CONSTRUCTION. IN NO CASE SHALL MATERIALS, VEHICLES OR EQUIPMENT BE STORED OR STOCK-PILED WITHIN THE ENCLOSURE.
3. THE CONTRACTOR IS RESPONSIBLE FOR NOTIFYING ALL CONSTRUCTION PERSONNEL OF THE PRESENCE AND PURPOSE OF CLEARING LIMITS AND PROTECTIVE FENCES AND FOR ENSURING THAT THE RESTRICTIONS ASSOCIATED WITH THE SAME ARE OBSERVED.
4. ALL TREES THAT ARE NOT SPECIFICALLY SHOWN TO BE REMOVED ARE TO BE SAVED, WHETHER THEY ARE SHOWN IN A TREE PROTECTION AREA OR NOT.

B. WHERE GRADE CHANGES IN EXCESS OF SIX INCHES FROM THE EXISTING NATURAL GRADE LEVEL ARE NECESSARY, PERMANENT PROTECTIVE STRUCTURES SUCH AS TREE WELLS OR WALLS SHALL BE PROPERLY INSTALLED.

1. ANY EXPOSED ROOTS CREATED BY GRADING, ETC. SHALL BE MULCHED THREE INCHES DEEP WITH SHREDDED HARDWOOD MULCH AS SOON AS POSSIBLE AFTER DAMAGE OCCURS.

PART 2 - MATERIALS

A. TREE PROTECTION FENCING: VDOT STD. FE-CL

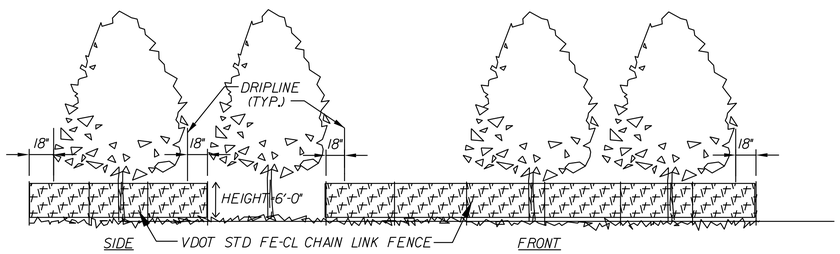

TYPICAL GROUPED TREE PROTECTION

NOT TO SCALE

FINAL PLANS

PROJECT	SHEET NO.
0337-133-101	2G

PROJECT MANAGER Sherry Earley, P.E., City of Suffolk (757) 514-7703
SURVEYED BY EWI, INC. (757) 368-0945
DESIGN SUPERVISED BY Ian Johnston, P.E., Clark Nexsen (757) 455-5800
DESIGNED BY Clark Nexsen (757) 455-5800

STORMWATER POLLUTION PREVENTION PLAN (SWPPP)
GENERAL INFORMATION SHEET

REVISED	STATE	ROUTE	PROJECT	SHEET NO.
	VA.	337	0337-133-101, PE-102 RW-202, C-502	2H(1)

DESIGN FEATURES RELATING TO CONSTRUCTION OR TO REGULATION AND CONTROL OF TRAFFIC MAY BE SUBJECT TO CHANGE AS DEEMED NECESSARY BY THE DEPARTMENT

VDOT (Division) or Co. Name (Location), Virginia (TECHNICAL DISCIPLINE)

The information contained in the SWPPP General Information sheets is intended to comply with the requirements of the VPDES General Permit For Discharges Of Stormwater From Construction Activities (the VPDES Construction Permit) issued July 1, 2014 and VDOT's approved Annual ESC and SWM Standards and Specifications.

The SWPPP General Information sheets are to be completed and included in the construction plan set (or other such documents) for land disturbance (construction) activities that disturb an area equal to or greater than 10,000 square feet, or equal to or greater than 2,500 square feet in the area defined as Tidewater, Virginia in the Virginia Chesapeake Bay Preservation Act.

The VDOT RLD will ensure that the information shown on the SWPPP General Information sheets is updated/revised as necessary in order to reflect changes that may occur during the construction phase of the land disturbing (construction) activity. The updated/revised sheets shall be maintained with the designated record set of plans (or other such documents) for the land disturbance (construction) activity.

✱ Denotes information that is to be provided/completed by the VDOT RLD.
✱✱ Denotes information that is to be provided/completed by the contractor.

SECTION I GENERAL INFORMATION

1. Activity Description - The proposed Nansemond Parkway Phase II Improvements project will widen Nansemond Paarkway from the existing two-lane undivided road to four lanes divided with median breaks from Helen Street to the Suffolk/Chesapeake City Line. This project will be constructed concurrently with the Portsmouth Boulevard widening in the City of Chesapeake.

2. This land disturbance (construction) activity site is located in City of Suffolk and approximately 8.16 acres will be disturbed by excavation, grading or other construction activities.

3. This proposed activity disturbs one acre or greater and requires coverage under the VPDES General Permit For Discharges Of Stormwater From Construction Activities (the VPDES Construction Permit) as issued by the DEQ. A copy of the VPDES Construction Permit (VAR10), the registration information (LD-445 form) and the permit coverage letter received from DEQ shall be maintained with other SWPPP documents for this land disturbing (construction) activity.

4. The ESC and SWM plans (where applicable) for this land disturbance (construction) activity have been developed in accordance with VDOT's Annual Erosion and Sediment Control and Stormwater Management Standards and Specifications as approved by the DEQ.

5. The City of Suffolk is designated as the RLD for this land disturbance (construction) activity.

6. This land disturbance (construction) activity discharges stormwater to the following surface waters that have been identified as impaired in the 2012 305(b)/303(d) Water Quality Assessment Integrated Report:

7. This land disturbance (construction) activity discharges stormwater to the following surface waters that have a TMDL waste load allocation established and approved prior to July 1, 2014 for sediment, total suspended solids, turbidity, nitrogen or phosphorus: N/A

8. This land disturbance (construction) activity discharges stormwater to the following surface waters that have been identified as exceptional in Section 9VAC25-260-30 A 3 c of the Virginia Administrative Code: N/A

9.Locations of surface waters and locations where concentrated stormwater is discharged from this land disturbance (construction) activity are identified in the construction plan set (or other such documents) for this land disturbance (construction) activity.

✱✱ 10. The location of on-site support facilities that will be covered under the VPDES Construction Permit coverage for this land disturbance (construction) activity shall be provided by the contractor and identified on the record set of plans or in other appropriate contract documents. Support facilities shall include, but not be limited to, borrow and disposal areas, construction and waste material storage areas, equipment and vehicle washing, maintenance, storage and fueling areas, storage areas for fertilizers, fuels or chemicals, concrete wash out areas, sanitary waste facilities and any other areas that may generate a stormwater or non-stormwater discharge directly related to the construction site.

✱✱ 11. The location of the on-site rain gage that will be used to determine the occurrence of a measurable storm event for the purposes of ESC and Pollution Prevention inspections will be provided by the contractor and identified on the record set of plans or in other appropriate SWPPP documents for this land disturbance (construction) activity.

The rain gage shall be observed daily at (insert time) to determine the occurrence of a measurable storm event (i.e., 0.25 inches of rainfall or greater in a 24 hour period). A log book shall be maintained to record observation information which shall include (1) the date, (2) the time, (3) whether or not rainfall is occurring at the time of the observation, (4) the amount of accumulated rainfall in the gage, if any, and (5) whether or not an inspection is required based on the amount of accumulated rainfall in the gage.

If there is no rainfall occurring at the time of the observation, the observation information shall be noted in the log book and the rain gage emptied and replaced. An inspection is required if there is 0.25 inches or more accumulation noted in the rain gage.

If there is rainfall occurring at the time of the observation, the observation information is to be noted in the log book. The rain gage is not to be emptied but left to accumulate additional rainfall until the conclusion of the rainfall event. At the conclusion of the rainfall event, an observation of the rain gage shall be made and the observation information shall be noted in the log book and the rain gage emptied and replaced. An inspection is required if there is 0.25 inches or more accumulation noted in the rain gage.

✱ 12. The name of the City individual(s) responsible for the inspection of the erosion and sediment control and pollution prevention measures on this land disturbance (construction) activity is identified on the LD-445E form which will be maintained with the other SWPPP documents for this land disturbance (construction) activity (Note: Individual(s) shall be certified through the DEQ ESC Inspector Certification Program and shall be knowledgeable in the area of pollution prevention at construction sites).

✱ 13. The ESC and P2 inspections for this land disturbing (construction) activity shall follow (Select Schedule 1 or 2) as defined in Section 107.16(e) of the R&B Specifications.

14. The following VDOT documents serve the purpose of those required by the VPDES Construction Permit:
- VDOT LD-445 form (VPDES Registration Statement)
- VDOT LD-445A form (SWPPP Contact Information)
- VDOT LD-445E form (Individuals responsible for ESC and P2 Plan implementation)
- VDOT LD-445D form (Notice of Permit Termination)
- VDOT C-107 Part I form (Self Inspection form)

SECTION II EROSION AND SEDIMENT CONTROL

1. The following variances to the Virginia ESC Regulations have been approved by the DEQ for this land disturbance (construction) activity: (list all approved variances; include a brief description of the variance, the date approved and the approving DEQ Office)

2. The intended sequence and timing of activities that disturb soils at the site (e.g., grubbing, excavation, grading, utilities and infrastructure installation, etc.) shall be provided by the contractor in accordance with Section 108.03 of the VDOT R&B Specifications and shall be included with the other SWPPP documents for this land disturbance (construction) activity.

3. Directions of stormwater flow and approximate slopes anticipated after major grading activities are identified in the construction plan set (or other such documents) for this land disturbance (construction) activity.

4. Areas of soil disturbance and areas of the site which will not be disturbed are identified in the construction plan set (or other such documents) for this land disturbance (construction) activity.

5. Locations of major structural and nonstructural ESC measures intended to filter, settle or similarly remove sediment are identified in the construction plan set (or other such documents) for this land disturbance (construction) activity.

6. Locations where stabilization practices are expected to occur are identified in the construction plan set (or other such documents) for this land disturbance (construction) activity.

7. A description of interim and permanent stabilization practices for the site are identified in the applicable sections of the documents identified in the Note 1 of Section III.

✱✱ 8. A record of the dates when major grading activities occur, when construction activities temporarily or permanently cease on a portion of the site, and when stabilization measures are initiated will be provided by the contractor and maintained with the record set of plans or other SWPPP documents for this land disturbance (construction) activity.

9.A description and schedule of procedures to maintain vegetation, erosion and sediment control measures and other protective measures in good and effective operating conditions are identified in Sections 107.16 and 303.03 of the VDOT R&B Specifications.

10. Nutrients shall be applied in accordance with Sections 603 and 604 of the VDOT Road and Bridge Specifications. Nutrients shall not be applied during rainfall events.

11. All engineering calculations supporting the design of erosion and sediment control measures proposed for this land disturbance (construction) activity are contained in the project drainage file located in the City of Suffolk, Department of Public Works and will be made available for review upon request during normal business hours.

12. The temporary erosion and siltation control items shown on the ESC Plan for this land disturbing (construction) activity are intended to provide a general plan for controlling erosion and sediment within the project limits. The ESC Plan is based on field conditions at the time of plan development and an assumed sequence of construction for the project. The contractor, in conjunction with the VDOT Project Engineer and/or ESC Inspector, shall adjust the location, quantity and type of erosion and sediment control items required based on the actual field conditions encountered at the time of construction and the actual scheduling and sequencing of the construction activities. Significant changes to the proposed ESC Plan (e.g., those that require an engineering analysis) shall be submitted to the applicable District Hydraulics Engineer for review and approval. Any changes to the proposed ESC Plan must be noted on the designated record set of plans which shall be retained on the project site and made available upon request during normal business hours.

13. The areas beyond the project's construction area are to be protected from siltation. Perimeter controls such as silt fence, diversion dikes, turbidity curtains, etc. shall be installed prior to any grubbing operations or other earth moving activities.

14. Temporary earthen structures such as dikes and berms are to be stabilized immediately upon installation. Stabilization may include temporary or permanent seeding, riprap, aggregate, sod, mulching, and/or soil stabilization blankets and matting in conjunction with seeding.

15. All channel relocations are to be constructed during the earliest stage of construction and shall be constructed in accordance with all applicable permit requirements and shall be constructed in the dry wherever possible. Stabilization or vegetation shall be established before flow is redirected through the constructed area as directed by the Engineer.

16. The contractor shall plan and implement his land disturbance operations in order to:
- a. Control the volume and velocity of stormwater runoff within the site to minimize erosion.
- b. Control the peak flow rates, volume and velocity of stormwater discharges to minimize erosion at outlets and in downstream channels.
- c. Minimize the amount of soil exposed.
- d. Minimize the disturbance of steep slopes.
- e. Minimize sediment discharge from the site.
- f. Provide and maintain natural buffers around surface waters, direct stormwater runoff to vegetated areas and maximize stormwater infiltration, unless infeasible.
- g. Minimize soil compaction (except in those areas where compaction is required by the contract documents) and preserve topsoil where feasible.

✱✱ 17. The name of the individual(s) or contractor(s) responsible for the installation and maintenance of the erosion and sediment control measures shall be supplied by the contractor and maintained with the other SWPPP documents for this land disturbance (construction) activity.

18. Soil stockpiles temporarily placed within the project area or on VDOT right of way or easement shall be stabilized or protected with sediment trapping measures.

19. A construction entrance or other approved measure shall be installed at all locations where construction vehicular traffic access routes intersect a paved or a public road in order to minimize the transport of sediment by vehicular tracking onto the paved surface. Where sediment is transported onto a paved or a public road surface, the road shall be cleaned thoroughly at the end of each work day by shoveling or sweeping. Removed sediment shall be disposed of in accordance with Section 106.04 of the R&B Specifications.

ACRONYMS
BMP - Best Management Practice
DEQ - Department of Environmental Quality
EPA - U.S. Environmental Protection Agency
ESC - Erosion and Sediment Control
IIM - Instructional and Informational Memorandum
R&B - Road and Bridge
RLD - Responsible Land Disturber
SWM - Stormwater Management
SWPPP - Stormwater Pollution Prevention Plan
TMDL - Total Maximum Daily Load
VDOT - Virginia Department of Transportation
VPDES - Virginia Pollutant Discharge Elimination System
VSMP - Virginia Stormwater Management Program
VESCP - Virginia Erosion and Sediment Control Program

Revised 10/21/15
Sheet 1 of 3

FINAL PLANS

PROJECT	SHEET NO.
0337-133-101	2H(1)

$TIME$STAMP$

PROJECT MANAGER Sherry Earley, P.E., City of Suffolk (757) 514-7703
SURVEYED BY EWI, INC. (757) 368-0945
DESIGN SUPERVISED BY Ian Johnston, P.E., Clark Nexsen (757) 455-5800
DESIGNED BY Clark Nexsen (757) 455-5800

STORMWATER POLLUTION PREVENTION PLAN (SWPPP)
GENERAL INFORMATION SHEET

The information contained in the SWPPP General Information sheets is intended to comply with the requirements of the VPDES General Permit For Discharges Of Stormwater From Construction Activities (the VPDES Construction Permit) issued July 1, 2014 and VDOT's approved Annual ESC and SWM Standards and Specifications.

The SWPPP General Information sheets are to be completed and included in the construction plan set (or other such documents) for land disturbance (construction) activities that disturb an area equal to or greater than 10,000 square feet, or equal to or greater than 2,500 square feet in the area defined as Tidewater, Virginia in the Virginia Chesapeake Bay Preservation Act.

The VDOT RLD will ensure that the information shown on the SWPPP General Information sheets is updated/revised as necessary in order to reflect changes that may occur during the construction phase of the land disturbing (construction) activity. The updated/revised sheets shall be maintained with the designated record set of plans (or other such documents) for the land disturbance (construction) activity.

✱ Denotes information that is to be provided/completed by the VDOT RLD.
✱✱ Denotes information that is to be provided/completed by the contractor.

ACRONYMS

BMP - Best Management Practice
DEQ - Department of Environmental Quality
EPA - U.S. Environmental Protection Agency
ESC - Erosion and Sediment Control
IIM - Instructional and Informational Memorandum
R&B - Road and Bridge
RLD - Responsible Land Disturber
SWM - Stormwater Management
SWPPP - Stormwater Pollution Prevention Plan
TMDL - Total Maximum Daily Load
VDOT - Virginia Department of Transportation
VPDES - Virginia Pollutant Discharge Elimination Sys.
VSMP - Virginia Stormwater Management Program
VESCP - Virginia Erosion and Sediment Control Program

REVISED	STATE	ROUTE	PROJECT	SHEET NO.
	VA.	337	0337-133-101, PE-102 RW-202, C-502	2H(2)

DESIGN FEATURES RELATING TO CONSTRUCTION OR TO REGULATION AND CONTROL OF TRAFFIC MAY BE SUBJECT TO CHANGE AS DEEMED NECESSARY BY THE DEPARTMENT

VDOT (Division) or Co. Name (Location), Virginia (TECHNICAL DISCIPLINE)

SECTION III SWPPP

1. All documents related to the SWPPP for this land disturbance (construction) activity shall be maintained at the activity site and shall be readily available for review upon request during normal business hours. Such documents include, but are not limited to, the construction plans (or other such documents), the ESC Plan, the Pollution Prevention Plan, the post construction SWM Plan (if applicable), the VDOT R&B Standards and Specifications, Supplemental Specifications, Special Provisions and Special Provision Copied Notes. Documents related to stormwater pollution prevention which are not a part of those documents referenced above, such as a copies of the VPDES Construction Permit coverage letter (when applicable) and the VPDES General Permit For Discharges Of Stormwater From Construction Activities (when applicable) and those required to be developed by the contractor for pollution prevention associated with any on-site support facilities being included in the VPDES Construction Permit coverage for this land disturbance (construction) activity are to be maintained at the activity site with the other SWPPP documents for this land disturbance (construction) activity. Where no facilities are available at the activity site to maintain the SWPPP documents, they are to be kept by or with the designated RLD at a location convenient to the activity site where they would be made available for review upon request during normal business hours.

2. The SWPPP and any subsequent amendments, modifications and updates shall be implemented from commencement of land disturbance until termination of VPDES Construction Permit coverage or completion of land disturbance (construction) activities where no VPDES Construction Permit coverage is required.

✱✱ 3. For all on-site support facilities that will be included in the VPDES Construction Permit coverage for this land disturbance (construction) activity, the contractor shall develop a SWPPP in accordance with, but not limited to, Section 106.08, 107.02 and 107.16 of the VDOT Road and Bridge Specifications. The SWPPP for the on-site support facilities shall be maintained with and become a component of the SWPPP for this land disturbance (construction) activity. Support facilities shall include, but not be limited to, borrow and disposal areas, construction and waste material storage areas, equipment and vehicle washing, maintenance, storage and fueling areas, storageareas for fertilizers, fuels or chemicals, concrete wash out areas, sanitary waste facilities and any other areas that may generate a stormwater or non-stormwater discharge directly related to the construction site.

✱ 4. By completing and submitting the SWPPP Certification form LD-445E, the RLD, or his authorized representative, certifies that all documents identified herein to be supplied by the contractor will be reviewed, approved (as applicable) and included with the other SWPPP documents for this land disturbance (construction) activity prior to start of work in those areas identified by such information.

5. For those land disturbing (construction) activities requiring coverage under the VPDES Construction Permit, the SWPPP shall be made available for review upon the request of the DEQ, the EPA, the VSMP Authority, the VESCP Authority, local government officials or the operator of a municipal separate storm sewer system (MS4) receiving discharge from the construction site.

✱ 6. For those land disturbing (construction) activities requiring coverage under the VPDES Construction Permit, the VDOT RLD shall post, or have posted, a copy of the General Permit coverage letter and a copy of a completed LD-445A form, noting the name and contact information for the VDOT person responsible for the land disturbing (construction) activity and its SWPPP, outside the project's construction office along with other Federal and State mandated information. Where there is no construction office (e.g., a maintenance activity), the permit coverage letter and the LD-445A form are to be maintained with the other SWPPP documents for the land disturbing (construction) activity.

7. The SWPPP shall be made available for review by the public upon request. Such reviews shall be at a time and publicly accessible location convenient to the VDOT and shall be scheduled during normal business hours and no less than once per month.

SECTION IV POST CONSTRUCTION STORMWATER MANAGEMENT

Choose the appropriate note 1 or 2 that is applicable to the proposed post construction SWM Plan for this land disturbance (construction) activity. If note 1 is applicable, then choose the appropriate note(s) 1a through 1d). Delete, strikethrough or mark as NA those notes not applicable.)

1. This land disturbance (construction) activity is grandfathered under Section 9VAC25-870-48 of the VSMP Regulations and utilizes the Part IIC technical criteria (i.e., Performance or Technology Based, MS 19, etc.) in Section 9VAC25-870-93 et.seq. of the VSMP Regulations. As such:

   This land disturbing (construction) activity complies with post development water quality requirements in accordance with the provisions of the VDOT IIM-LD-195.8 Section 19.2.

2. The permanent onsite SWM facilities or offsite strategies proposed to meet the water quality/quantity requirements for this land disturbance (construction) activity are listed in Section VI.

3. A description of all post-construction stormwater management measures that will be installed during the construction process to control pollutants in stormwater discharges after construction operations have been completed is included in the construction plan set (or other such documents) for this land disturbance (construction) activity.

4. All engineering calculations supporting the design of the post-construction stormwater management measures for this land disturbance (construction) activity, including an explanation of the technical basis used to select the practices, are contained in the project drainage file located in the City of Suffolk Department of Public Works and will be made available for review upon request during normal working business hours.

SECTION V - POLLUTION PREVENTION PLAN

1. The following non-stormwater discharges from this land disturbing (construction) activity and any on-site support facilities are prohibited:
   a. Wastewater from concrete washouts.
   b. Wastewater from the washout and cleanout of stucco, paint, form release oils, curing compounds and other construction materials.
   c. Fuels, oils or other pollutants used in vehicle and equipment operation and maintenance.
   d. Oils, toxic substances or hazardous substances from spills or other releases.
   e. Soaps, solvents or detergents used in equipment and vehicle washing.
   f. There shall be no discharge of floating solids or visible foam in other than trace amounts

2. The following non-stormwater discharges from this land disturbing (construction) activity and any on-site support facilities are allowed when discharged in compliance with the VPDES Construction Permit:
   a. Discharges from fire fighting activities.
   b. Fire hydrant flushings.
   c. Waters used to wash vehicles or equipment where soaps, solvents or detergents have not been used and the wash water has been filtered, settled or similarly treated prior to discharge.
   d. Water used to control dust that has been filtered, settled or similarly treated prior to discharge.
   e. Potable water sources including uncontaminated waterline flushings.
   f. Routine external building wash down where soaps, solvents or detergents have not been used and the wash water has been filtered, settled or similarly treated prior to discharge.
   g. Pavement wash waters where spills or leaks of toxic or hazardous materials have not occurred (or where all spilled or leaked material has been removed prior to washing), where soaps, solvents or detergents have not been used and where the wash water has been filtered, settled or similarly treated prior to discharge.
   h. Uncontaminated air conditioning or compressor condensate.
   i. Uncontaminated ground water or spring water.
   j. Foundation or footing drains where flows are not contaminated with process materials such as solvents.
   k. Uncontaminated excavation dewatering, including dewatering trenches and excavations that have been filtered, settled or similarly treated prior to discharge.
   l. Landscape irrigation.

✱✱ 3. The contractor shall develop a Pollution Prevention Plan to address any of his on-site operations that have a potential to generate a pollutant that may reasonably be expected to affect the quality of stormwater discharges from this land disturbance (construction) activity. The Pollution Prevention Plan shall be developed in accordance with, but not limited to, Sections 106.08, 107.02 and 107.16 of the VDOT Road and Bridge Specifications and shall include a narrative with appropriate plan detail and shall be provided on standard 8.5 x 11 inch paper or larger and shall:
   a. Identify the potential pollutant-generating activities and the pollutant that is expected to be exposed to stormwater.
   b. Describe the location where the potential pollutant-generating activities will occur, or if identified on the record set of plans, reference the record set of plans.
   c. Identify all non-stormwater discharges, as described in note two of this section, that are or will be commingled with stormwater discharges from the construction activity, including any on-site support activities.
   d. Identify the person(s) or contractor(s) responsible for implementing and maintaining the pollution prevention practice or practices for each pollutant-generating activity.
   e. Describe the pollution prevention practices and procedures that will be implemented to:
      1) Prevent and respond to leaks, spills, and other releases, including procedures for expeditiously stopping, containing, and cleaning up spills, leaks, and other releases, and procedures for reporting leaks, spills, and other releases in accordance with Section 107.16 of the VDOT Road and Bridge Specifications and the requirements within the VPDES Construction Permit.
      2) Prevent the discharge of spilled and leaked fuels and chemicals from vehicle fueling and maintenance activities.
      3) Prevent the discharge of soaps, solvents, detergents, and wash water from construction materials, including procedures for the clean-up of stucco, paint, form release oils, and curing compounds.
      4) Minimize the discharge of pollutants from vehicle and equipment washing, wheel wash water, and other types of washing.
      5) Direct concrete wash water into a leak-proof container or leak-proof settling basin. The container or basin shall be designed so that no overflows can occur due to inadequate sizing or precipitation. Hardened concrete wastes shall be removed and disposed of in a manner consistent with the handling of other construction wastes. Liquid concrete wastes shall be removed and disposed of in a manner consistent with the handling of other construction wash waters and shall not be discharged to surface waters.
      6) Minimize the discharge of pollutants from storage, handling, and disposal of construction products, materials, and wastes including building products (such as asphalt sealants, copper flashing, roofing materials, adhesives, and concrete admixtures), pesticides, herbicides, insecticides, fertilizers, landscape materials, construction and domestic wastes (such as packaging materials), scrap construction materials, masonry products, timber, pipe and electrical cuttings, plastics, styrofoam, concrete, and other trash or building materials.
      7) Prevent the discharge of fuels, oils, and other petroleum products, hazardous or toxic wastes, and sanitary wastes.
      8) Address any other discharge from any potential pollutant-generating activity not listed herein.
      9) Describe and implement procedures for providing pollution prevention awareness (including but not limited to prevention practices, disposal practices and appropriate disposal locations) for all applicable wastes (including any wash water), to appropriate personnel.

Revised 10/21/15
Sheet 2 of 3

FINAL PLANS

PROJECT	SHEET NO.
0337-133-101	2H(2)

PROJECT MANAGER Sherry Earley, P.E., City of Suffolk (757) 514-7703
SURVEYED BY EWI, INC. (757) 368-0945
DESIGN SUPERVISED BY Ian Johnston, P.E., Clark Nexsen (757) 455-5800
DESIGNED BY Clark Nexsen (757) 455-5800

STORMWATER POLLUTION PREVENTION PLAN (SWPPP)
GENERAL INFORMATION SHEET

The information contained in the SWPPP General Information sheets is intended to comply with the requirements of the VPDES General Permit For Discharges Of Stormwater From Construction Activities (the VPDES Construction Permit) issued July 1, 2014 and VDOT's approved Annual ESC and SWM Standards and Specifications.

The SWPPP General Information sheets are to be completed and included in the construction plan set (or other such documents) for land disturbance (construction) activities that disturb an area equal to or greater than 10,000 square feet, or equal to or greater than 2,500 square feet in the area defined as Tidewater, Virginia in the Virginia Chesapeake Bay Preservation Act.

The VDOT RLD will ensure that the information shown on the SWPPP General Information sheets is updated/revised as necessary in order to reflect changes that may occur during the construction phase of the land disturbing (construction) activity. The updated/revised sheets shall be maintained with the designated record set of plans (or other such documents) for the land disturbance (construction) activity.

✱ Denotes information that is to be provided/completed by the VDOT RLD.
✱✱ Denotes information that is to be provided/completed by the contractor.

REVISED	STATE	ROUTE	PROJECT	SHEET NO.
	VA.	337	0337-133-101, PE-102 RW-202, C-502	2H(3)

DESIGN FEATURES RELATING TO CONSTRUCTION OR TO REGULATION AND CONTROL OF TRAFFIC MAY BE SUBJECT TO CHANGE AS DEEMED NECESSARY BY THE DEPARTMENT

VDOT (Division) or Co. Name (Location), Virginia (TECHNICAL DISCIPLINE)

SECTION VI - PERMANENT BMP INFORMATION △

✱ Denotes information that is to be completed by the VDOT RLD.
( ) See note referenced by number in parentheses.

INSTALLED BMP INFORMATION
Table A
(VDOT Owned/Operated)

BMP Type (See Table 1 and 3)	County or City	Latitude/Longitude (1) LAT	Latitude/Longitude (1) LONG	State Hydrologic Unit Code (7)	Receiving Stream Name (2)	Name of Impaired Water (9)	Acres Treated Per BMP (3) Impervious	Pervious	TOTAL
Retention Basin 1	Suffolk	36.816886	76.459561	JL55	Bailey Creek	Bailey Creek	9.24	24.14	33.66

ALTERNATIVE BMP INFORMATION
Table B

BMP Type (See Table 2)	Name of Nutrient Bank or Broker (6)	County or City (5)	Latitude/Longitude (1) (5) LAT	LONG	State Hydrologic Unit Code (5) (7)	Project Acres Treated Per BMP (3) Impervious	Pervious	TOTAL	Nutrient Credits (lbs./acre/year) Acquired (3) (6)

( ) See note referenced by number in parentheses.

Table 1: Permanent BMP Types (Based on 1999 Va. SWM Handbook)
Bio-Retention Basin
Bio-Retention Filter
Constructed Stormwater Wetlands
Extended Detention Basin
Extended Detention Basin Enhanced
Grassed Swale
Infiltration Basin
Infiltration Trench
Manufactured Treatment Device (MTD) (8)
Retention Basin I
Retention Basin II
Retention Basin III
Sand Filter
Vegetated Filter Strip
Other Approved Types (List Type)

Table 2: Alternative BMP Types
Comprehensive SWM Plan (Regional) Facility
Pollutant Loading Pro Rata Share Program
Purchase of Nutrients Credits
Other Approved Options (List Type) (4)

Table 3: Permanent BMP Types (Based on BMP Clearing House)
Sheet Flow to Vegetated Filter Strip
Grass Channel
Soil Compost Amendment
Permeable Pavement
Infiltration Practice
Bioretention
Dry Swale
Wet Swale
Filtering Practice
Constructed Wetlands
Biorention Conservation
Extended Detention Pond
Wet Pond
Manufactured Treatment Device (MTD)(8)
Other Approved Types (List Type) (4)

△ Any changes to the proposed SWM Plan or BMPs necessitated during the construction phase of the project that affects the proposed construction details or potentially affects the information shown in the BMP Tables A and/or B shall be coordinated by the VDOT RLD with the appropriate VDOT District Hydraulics Engineer. The construction plans and the BMP Tables A and/or B are to be formally revised to reflect any authorized/approved changes to the proposed SWM Plan and/or the proposed BMP construction details. All plan revisions shall be completed in accordance with the Road Design Manual and the Construction Division IIM-CD-2013-12.01, signed and sealed in accordance with Department's sealing and signing policy IIM-LD-243 and filed with the record set of construction plans maintained in the VDOT Central Office Plan File Room (Falcon Web Suite). Prior to submitting for termination of coverage under the VPDES General Permit For The Discharge Of Stormwater From Construction Activities, the RLD shall have the District Maintenance Infrastructure Manager review the BMPs installed with the project (BMP Table A) for acceptance of maintenance responsibility and to obtain a Maintenance ID number for each BMP listed in BMP Table A. The RLD shall use the information in BMP Tables A and B along with the assigned Maintenance ID number and the date that the BMP became functional as a permanent control measure (for BMPs in Table A only) to complete the LD-445D form when certifying the construction of the BMPs and submitting for termination of coverage under the VPDES General Permit For The Discharge Of Stormwater From Construction Activities.

NOTES:
(1) In decimal degrees to the nearest one ten-thousandth of a degree.

(2) For streams with no names, list "(Unnamed Tributary to (closest stream name)".

(3) Show acres treated to the nearest one tenth or pounds purchased to the nearest one hundredth.

(4) Include agreements with off-site BMP owners.

(5) Information pertains to the alternative BMP option location, where applicable. Exception - Not required for nutrient credit purchase option.

(6) Applies to the purchase of nutrient credits only.

(7) Virginia 6th Order HUC (VAHU6) Example - YO30.

(8) Final approved shop drawings of Manufactured Treatment Devices (MTDs) are to be included with the BMP information submitted with the LD-445D form.

(9) List the name of any impaired water to which the BMP discharges. The determination of impaired water shall be based on those streams listed as impaired in the 2012 305(b)/303(d) Water Quality Assessment Integrated Report and shall be the first named waterbody to which the BMP discharges.

FINAL PLANS

ACRONYMS

BMP - Best Management Practice
DEQ - Department of Environmental Quality
EPA - U.S. Environmental Protection Agency
ESC - Erosion and Sediment Control
IIM - Instructional and Informational Memorandum
R&B - Road and Bridge
RLD - Responsible Land Disturber
SWM - Stormwater Management
SWPPP - Stormwater Pollution Prevention Plan
TMDL - Total Maximum Daily Load
VDOT - Virginia Department of Transportation
VPDES - Virginia Pollutant Discharge Elimination System
VSMP - Virginia Stormwater Management Program
VESCP - Virginia Erosion and Sediment Control Program

Revised 10/21/15

PROJECT	SHEET NO.
0337-133-101	2H(3)

DGN $REF001 $REF002 $REF003 $REF004 $REF005 $REF006
$DGNLEV $LEV001 $LEV002 $LEV003 $LEV004 $LEV005 $LEV006

PROJECT MANAGER Sherry Earley, P.E., CITY OF SUFFOLK (757) 514-7703
SURVEYED BY EMI, INC. (757) 368-0945
DESIGN SUPERVISED BY Ira Johnston, P.E. (757) 455-5800
DESIGNED BY Clark Nexsen (757) 455-5800

REVISED	STATE	ROUTE	PROJECT	SHEET NO.
	VA.	337	0337-133-101, PE-102 RW-202, C-502	3

DESIGN FEATURES RELATING TO CONSTRUCTION OR TO REGULATION AND CONTROL OF TRAFFIC MAY BE SUBJECT TO CHANGE AS DEEMED NECESSARY BY THE DEPARTMENT

VDOT (Division) or Co. Name (Location), Virginia (TECHNICAL DISCIPLINE)

VDOT (Division) or Co. Name (Location), Virginia (TECHNICAL DISCIPLINE)

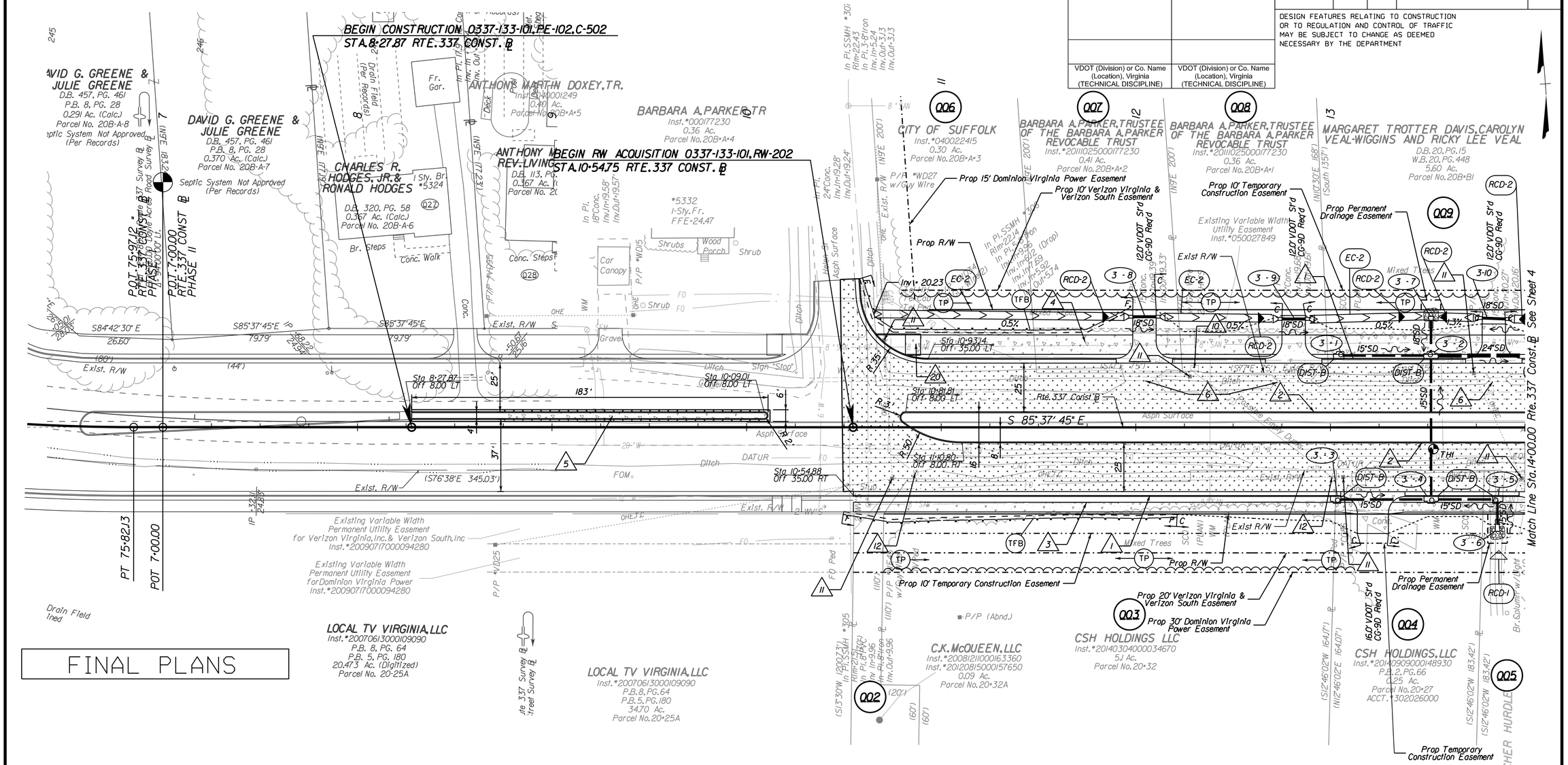

FINAL PLANS

LEGEND

1	Combination Curb and Gutter (Std CG-6)	12	Relocate Pedestal (By Others)
2	Curb (Std CG-2)	13	VDOT Std CR-1
3	5' Hydraulic Cement Concrete Sidewalk (4")	14	Curb Slot
4	10' Hydraulic Cement Concrete Sidewalk (4")	15	Remove and Relocate Mailbox
5	Median Strip (Std MS-1)	16	Remove and Relocate Sign
6	Remove Existing Storm Pipe/Structure	17	Remove Fence
7	Not Used	18	Remove Light Pole
8	Not Used	19	Remove Tree/Shrub
9	Not Used	20	VDOT Std CG-12 Type B
10	Relocate Telecommunication Hand Hole (By Others)		
11	Relocate Power Pole (By DVP)		

C ..... Denotes Construction Limits In Cuts

F _ _ Denotes Construction Limits In Fills

Note : Figures in parenthesis and dot - dot - dashed lines denote Temporary Easements.

Note : Figures in brackets and dot - dashed lines denote Permanent Easements.

Denotes Demolition of Pavement

Denotes New Asphalt Pavement

Denotes Pavement Mill and Overlay

SUBSURFACE UTILITY OWNERS

1 HRSD
P.O. BOX 5911
VIRGINIA BEACH, VA 23471
Attn: Ryan Radspinner
Tel: (757) 460-4232

2 CITY OF SUFFOLK
Dept of Public Utilities
157 N. Main St., Suite D
SUFFOLK, VA 23434
Attn: Larry Andrews
Tel: (757) 514-7683

3 VERIZON VIRGINIA, INC.
2920 Elmhurst Lane
Portsmouth, VA 23701-2739
Attn: Christopher "Luke" Lukens
Tel: (757) 465-5326

4 COLUMBIA GAS OF VIRGINIA
7001 HARBOR VIEW BLVD
SUFFOLK, Va 23435
Attn: Brett Fearnley
Tel: (757) 638-2414

5 CHARTER COMMUNICATIONS
216 Moore Avenue
Suffolk, Va. 23434
Attn: Kim Mann
Tel: (757) 735-4007

6 CITY OF PORTSMOUTH
Dept. of Public Utilities
Attn: Frank Wilson
Tel: (757) 393-8561
430 Meander Road
PORTSMOUTH, VA 23704

7 LEVEL 3 COMMUNICATIONS INC.
John Dalton
2600 ELTHAM AVE. STE 103
NORFOLK, VA. 23513
Tel: (757) 777-7715

8 DOMINION VIRGINIA POWER
1600 HAMILTON AVE.
PORTSMOUTH, VA 23707
Attn: Bobby Wood
Tel: (757) 393-3817

9 VERIZON SOUTH INC.
3011 Hungary Spring Rd. 2nd Flr
RICHMOND, VA 23228
Attn: Anthony (Tony) French
TEL. (804) 772-7312

REFERENCES (PROFILES, DETAIL & DRAINAGE DESCRIPTION SHEETS, ETC.)	
Drainage Descr.	2C
Profile Sheet	3A
Entrance Profile	8(1)
Pavement Markings, Marker & Signing Plan	9(3)
Utility Plan & Profile	10(3)
Lighting & Landscape Plan	11(3)

PROJECT	SHEET NO.
0337-133-101	3

$TIMESTAMP$

d4146003.dgn 5/20/2016 1:29:42 PM

DGN $REF001 $REF002 $REF003 $REF004 $REF005 $REF006
$DGNLEV $LEV001 $LEV002 $LEV003 $LEV004 $LEV005 $LEV006

PROJECT MANAGER Sherry Earley, P.E. CITY OF SUFFOLK (757) 514-7703
SURVEYED BY PMI, INC. (757) 368-0945
DESIGN SUPERVISED BY Jan Johnston, P.E. (757) 455-5800
DESIGNED BY Clark Nexsen, (757) 455-5800

REVISED	STATE	STATE ROUTE	STATE PROJECT	SHEET NO.
	VA.	337	0337-133-101, PE-102, RW-202, C-502	3A

DESIGN FEATURES RELATING TO CONSTRUCTION OR TO REGULATION AND CONTROL OF TRAFFIC MAY BE SUBJECT TO CHANGE AS DEEMED NECESSARY BY THE DEPARTMENT

VDOT (Division) or Co. Name (Location), Virginia (TECHNICAL DISCIPLINE)

FINAL PLANS

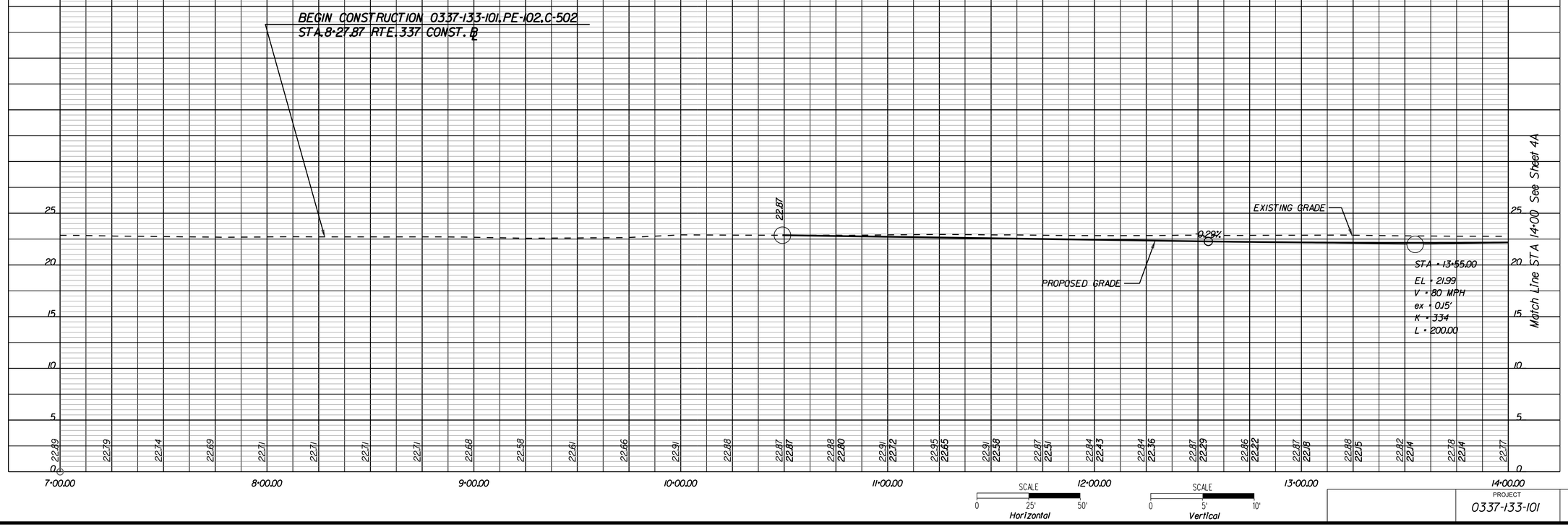

PROJECT	SHEET NO.
0337-133-101	3A

$TIME$STAMP

d4146003a.dgn 5/20/2016 1:29:43 PM

PROJECT MANAGER Sherry Earley, P.E., City of Suffolk (757) 514-7703
SURVEYED BY EMI, INC. (757) 368-0945
DESIGN SUPERVISED BY Ina Johnston, P.E., Clark Nexsen (757) 455-5800
DESIGNED BY Clark Nexsen (757) 455-5800

FINAL PLANS

REVISED	STATE	ROUTE	PROJECT	SHEET NO.
	VA.	337	0337-133-101, PE-102 RW-202, C-502	4

DESIGN FEATURES RELATING TO CONSTRUCTION OR TO REGULATION AND CONTROL OF TRAFFIC MAY BE SUBJECT TO CHANGE AS DEEMED NECESSARY BY THE DEPARTMENT

VDOT (Division) or Co. Name (Location), Virginia (TECHNICAL DISCIPLINE)

VDOT (Division) or Co. Name (Location), Virginia (TECHNICAL DISCIPLINE)

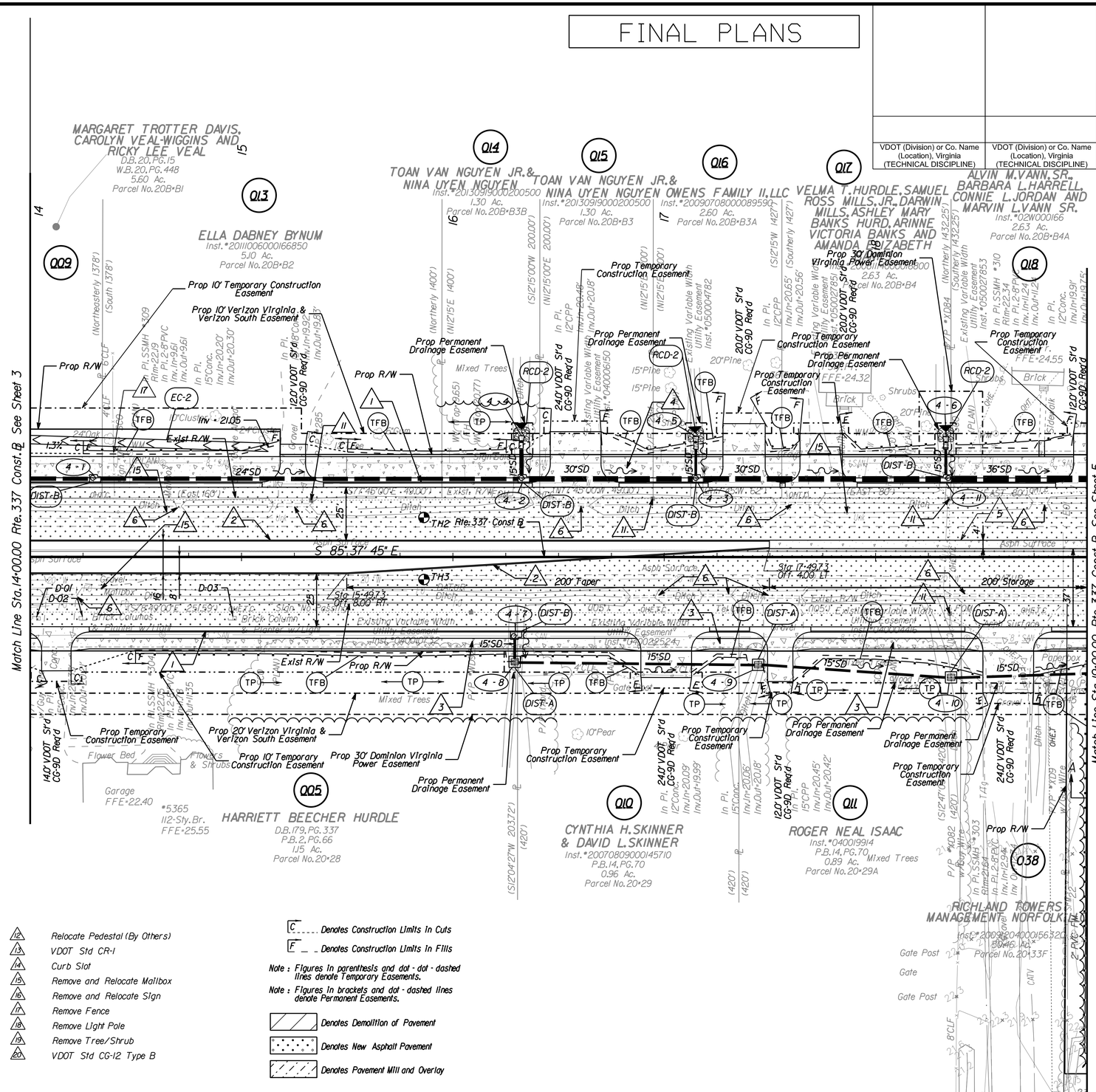

SUBSURFACE UTILITY OWNERS

1 HRSD
P.O. BOX 5911
VIRGINIA BEACH, VA 23471
Attn: Ryan Radspinner
Tel: (757) 460-4232

2 CITY OF SUFFOLK
Dept of Public Utilities
157 N. Main St., Suite D
SUFFOLK, VA 23434
Attn: Larry Andrews
Tel: (757) 514-7683

3 VERIZON VIRGINIA, INC.
2920 Elmhurst Lane
Portsmouth, VA 23701-2739
Attn: Christopher "Luke" Lukens
Tel: (757) 465-5326

4 COLUMBIA GAS OF VIRGINIA
7001 HARBOR VIEW BLVD
SUFFOLK, Va 23435
Attn: Brett Fearnley
Tel: (757) 638-2414

5 CHARTER COMMUNICATIONS
216 Moore Avenue
Suffolk, Va. 23434
Attn: Kim Mann
Tel: (757) 735-4007

6 CITY OF PORTSMOUTH
Dept. of Public Utilities
Attn: Frank Wilson
Tel: (757) 393-8561
430 Meander Road
PORTSMOUTH, VA 23704

7 LEVEL 3 COMMUNICATIONS INC.
John Dalton
2600 ELTHAM AVE. STE 103
NORFOLK, VA. 23513
Tel. (757) 777-7715

8 DOMINION VIRGINIA POWER
1600 HAMILTON AVE.
PORTSMOUTH, VA 23707
Attn: Bobby Wood
Tel: (757) 393-3817

9 VERIZON SOUTH INC.
3011 Hungary Spring Rd. 2nd Flr
RICHMOND, VA 23228
Attn: Anthony (Tony) French
TEL. (804) 772-7312

LEGEND

1. Combination Curb and Gutter (Std CG-6)
2. Curb (Std CG-2)
3. 5' Hydraulic Cement Concrete Sidewalk (4")
4. 10' Hydraulic Cement Concrete Sidewalk (4")
5. Median Strip (Std MS-1)
6. Remove Existing Storm Pipe/Structure
7. Not Used
8. Not Used
9. Not Used
10. Relocate Telecommunication Hand Hole (By Others)
11. Relocate Power Pole (By DVP)
12. Relocate Pedestal (By Others)
13. VDOT Std CR-1
14. Curb Slot
15. Remove and Relocate Mailbox
16. Remove and Relocate Sign
17. Remove Fence
18. Remove Light Pole
19. Remove Tree/Shrub
20. VDOT Std CG-12 Type B

C ..... Denotes Construction Limits In Cuts

F ..... Denotes Construction Limits In Fills

Note: Figures in parenthesis and dot - dot - dashed lines denote Temporary Easements.

Note: Figures in brackets and dot - dot - dashed lines denote Permanent Easements.

Denotes Demolition of Pavement

Denotes New Asphalt Pavement

Denotes Pavement Mill and Overlay

REFERENCES (PROFILES, DETAIL & DRAINAGE DESCRIPTION SHEETS, ETC.)

Profile Sheet	4A
Drainage Descr.	2C
Entrance Profile	8(1)
Pavement Markings, Marker & Signing Plan	9(4)
Utility Plan & Profile	10(4)
Lighting & Landscape Plan	11(4)

SCALE 0 25' 50'

PROJECT	SHEET NO.
0337-133-101	4

$TIME$ $STAMP$

DGN $REF001 $REF002 $REF003 $REF004 $REF005 $REF006
$DGNLEV $LEV001 $LEV002 $LEV003 $LEV004 $LEV005 $LEV006

PROJECT MANAGER Sherry Earley,P.E.,CITY OF SUFFOLK (757) 514-7703
SURVEYED BY PMI,INC.(757) 368-0945
DESIGN SUPERVISED BY Ian Johnston,P.E.(757) 455-5800
DESIGN BY Clark Nexsen (757) 455-5800

REVISED	STATE	STATE ROUTE	STATE PROJECT	SHEET NO.
	VA.	337	0337-133-101, PE-102, RW-202, C-502	4A

DESIGN FEATURES RELATING TO CONSTRUCTION OR TO REGULATION AND CONTROL OF TRAFFIC MAY BE SUBJECT TO CHANGE AS DEEMED NECESSARY BY THE DEPARTMENT

VDOT (Division) or Co. Name (Location), Virginia (TECHNICAL DISCIPLINE)

FINAL PLANS

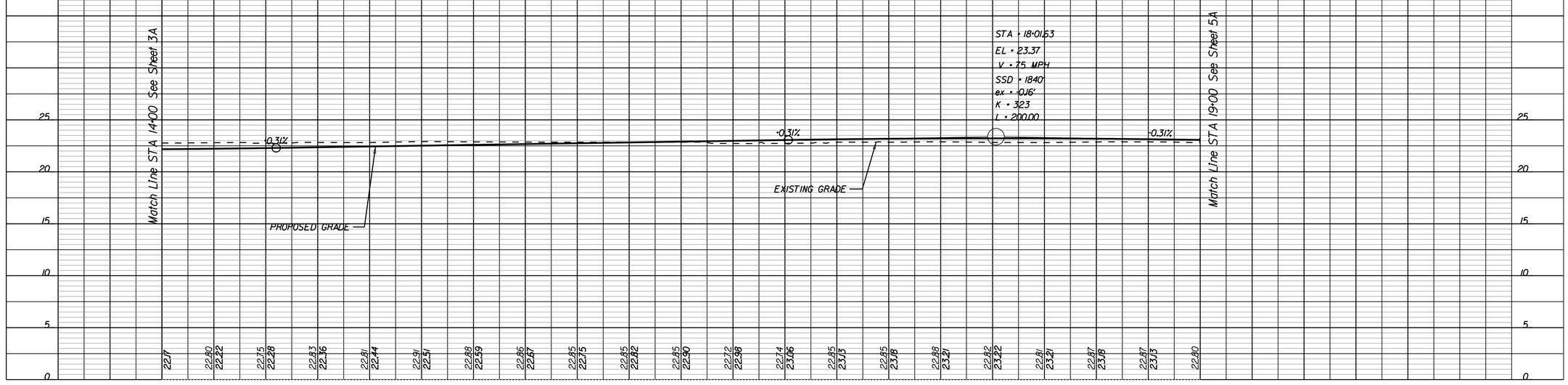

SCALE 0 25' 50' Horizontal

SCALE 0 5' 10' Vertical

PROJECT	SHEET NO.
0337-133-101	4A

$TIME$STAMP$

d4146004a.dgn 5/20/2016 1:29:45 PM

DGN $REF001 $REF002 $REF003 $REF004 $REF005 $REF006
$DGNLEV $LEV001 $LEV002 $LEV003 $LEV004 $LEV005 $LEV006

PROJECT MANAGER Sherry Earley P.E. City of Suffolk (757) 514-7703
SURVEYED BY EMI INC. (757) 368-0945
DESIGN SUPERVISED BY Ian Johnston P.E. Clark Nexsen (757) 455-5800
DESIGNED BY Clark Nexsen (757) 455-5800

FINAL PLANS

REVISED	STATE	ROUTE	PROJECT	SHEET NO.
	VA.	337	0337-133-101, PE-102 RW-202, C-502	5

DESIGN FEATURES RELATING TO CONSTRUCTION OR TO REGULATION AND CONTROL OF TRAFFIC MAY BE SUBJECT TO CHANGE AS DEEMED NECESSARY BY THE DEPARTMENT

VDOT (Division) or Co. Name (Location), Virginia (TECHNICAL DISCIPLINE)

VDOT (Division) or Co. Name (Location), Virginia (TECHNICAL DISCIPLINE)

LEGEND

1. Combination Curb and Gutter (Std CG-6)
2. Curb (Std CG-2)
3. 5' Hydraulic Cement Concrete Sidewalk (4")
4. 10' Hydraulic Cement Concrete Sidewalk (4")
5. Median Strip (Std MS-1)
6. Remove Existing Storm Pipe/Structure
7. Not Used
8. Not Used
9. Not Used
10. Relocate Telecommunication Hand Hole (By Others)
11. Relocate Power Pole (By DVP)
12. Relocate Pedestal (By Others)
13. VDOT Std CR-1
14. Curb Slot
15. Remove and Relocate Mailbox
16. Remove and Relocate Sign
17. Remove Fence
18. Remove Light Pole
19. Remove Tree/Shrub
20. VDOT Std CG-12 Type B

C _ _ _ Denotes Construction Limits In Cuts

F _ _ _ Denotes Construction Limits In Fills

Note : Figures in parenthesis and dot - dot - dashed lines denote Temporary Easements.

Note : Figures in brackets and dot - dashed lines denote Permanent Easements.

Denotes Demolition of Pavement

Denotes New Asphalt Pavement

Denotes Pavement Mill and Overlay

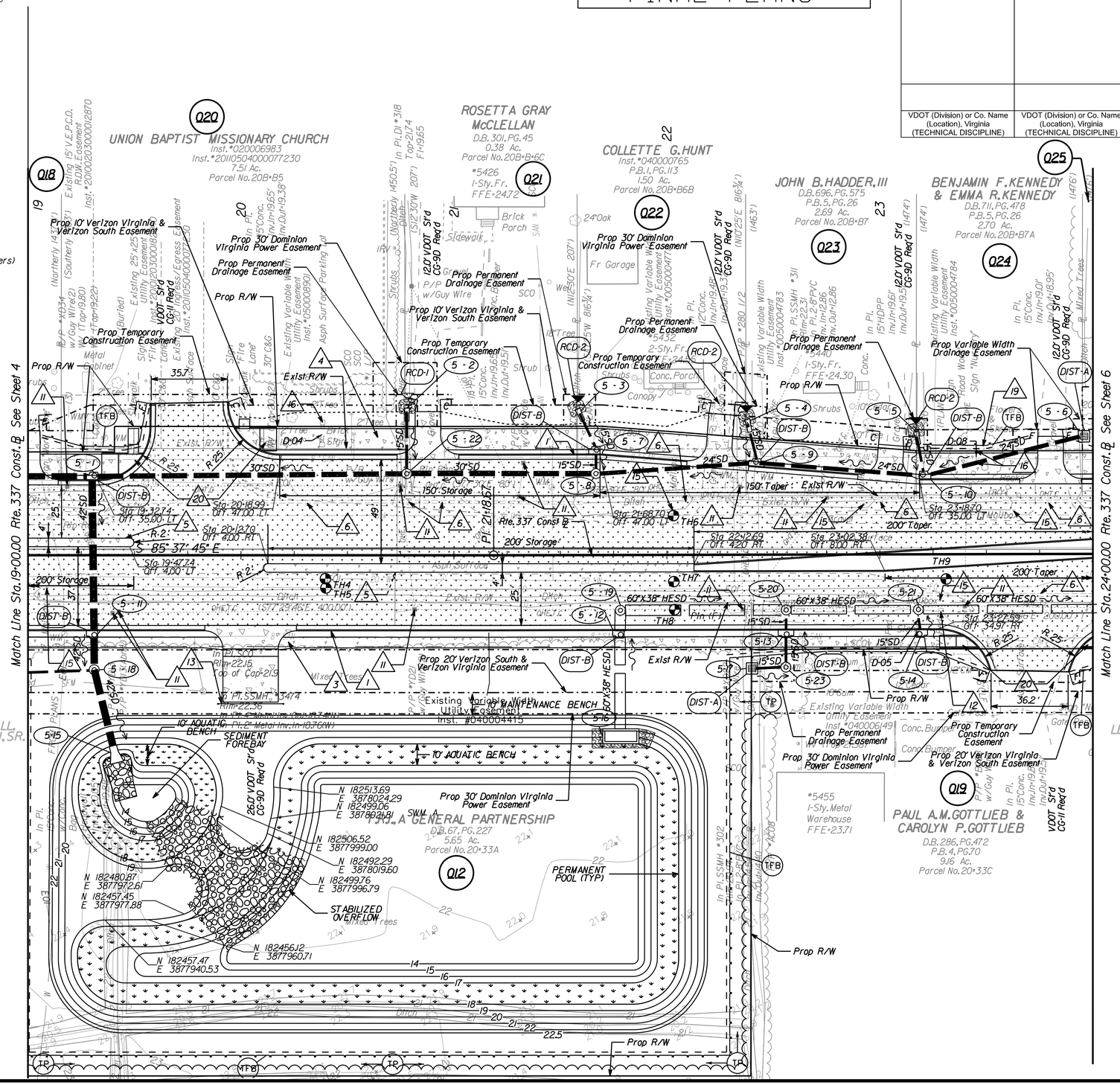

SUBSURFACE UTILITY OWNERS

1. HRSD
   P.O. BOX 5911
   VIRGINIA BEACH, VA 23471
   Attn: Ryan Radspinner
   Tel.(757) 460-4232
2. CITY OF SUFFOLK
   Dept of Public Utilities
   157 N. Main St, Suite D
   SUFFOLK, VA 23434
   Attn: Larry Andrews
   Tel.(757) 514-7683
3. VERIZON VIRGINIA, INC.
   2920 Elmhurst Lane
   Portsmouth, VA 23701-2739
   Attn: Christopher "Luke" Lukens
   Tel.(757) 465-5326
4. COLUMBIA GAS OF VIRGINIA
   7001 HARBOR VIEW BLVD
   SUFFOLK, Va 23435
   Attn: Brett Fearnley
   Tel.(757) 638-2414
5. CHARTER COMMUNICATIONS
   216 Moore Avenue
   Suffolk, Va. 23434
   Attn: Kim Mann
   Tel.(757) 735-4007
6. CITY OF PORTSMOUTH
   Dept. of Public Utilities
   Attn: Frank Wilson
   Tel.(757) 393-8561
   430 Meander Road
   PORTSMOUTH, VA 23704
7. LEVEL 3 COMMUNICATIONS INC.
   John Dalton
   2600 ELTHAM AVE, STE 103
   NORFOLK, VA. 23513
   Tel.(757) 777-7715
8. DOMINION VIRGINIA POWER
   1600 HAMILTON AVE.
   PORTSMOUTH, VA 23707
   Attn: Bobby Wood
   Tel.(757) 393-3817
9. VERIZON SOUTH INC.
   3011 Hungary Spring Rd, 2nd Flr
   RICHMOND, VA 23228
   Attn: Anthony (Tony) French
   TEL.(804) 772-7312

REFERENCES (PROFILES, DETAIL & DRAINAGE DESCRIPTION SHEETS, ETC.)

Profile Sheet	5A
Drainage Descr.	2C
Stormwater Management Details	2D
Entrance Profile	8(1)
Pavement Markings, Marker & Signing Plan	9(5)
Utility Plan & Profile	10(5)
Lighting & Landscape Plan	11(5)

SCALE 0 25' 50'

PROJECT	SHEET NO.
0337-133-101	5

$TIME$STAMP$

d4146005.dgn 5/20/2016 1:33:56 PM

DGN $REF001 $REF002 $REF003 $REF004 $REF005 $REF006
$DGNLEV $LEV001 $LEV002 $LEV003 $LEV004 $LEV005 $LEV006

PROJECT MANAGER Sherry Earley, P.E. CITY OF SUFFOLK (757) 514-7703
SURVEYED BY PMI, INC. (757) 368-0945
DESIGN SUPERVISED BY Jan Johnston, P.E. (757) 455-5800
DESIGN BY Clark Nexsen (757) 455-5800

REVISED	STATE	ROUTE	STATE PROJECT	SHEET NO.
	VA.	337	0337-133-101, PE-102, RW-202, C-502	5A

DESIGN FEATURES RELATING TO CONSTRUCTION OR TO REGULATION AND CONTROL OF TRAFFIC MAY BE SUBJECT TO CHANGE AS DEEMED NECESSARY BY THE DEPARTMENT

VDOT (Division) or Co. Name
(Location), Virginia
(TECHNICAL DISCIPLINE)

FINAL PLANS

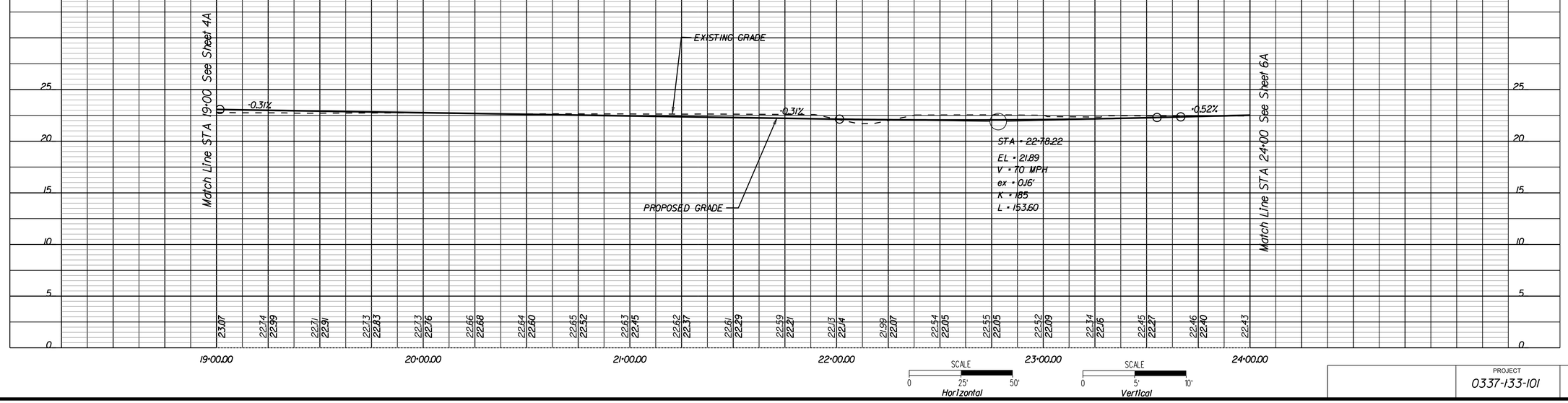

PROJECT	SHEET NO.
0337-133-101	5A

$TIME$STMP

d4146005a.dgn 5/20/2016 1:33:57 PM

DGN $REF001 $REF002 $REF003 $REF004 $REF005 $REF006
$DGNLEV $LEV001 $LEV002 $LEV003 $LEV004 $LEV005 $LEV006

PROJECT MANAGER Sherry Earley, P.E., City of Suffolk (757) 514-7703
SURVEYED BY EMI, INC. (757) 368-0945
DESIGN SUPERVISED BY Ira Johnston, P.E., Clark Nexsen (757) 455-5800
DESIGN BY Clark Nexsen (757) 455-5800

FINAL PLANS

VDOT (Division) or Co. Name (Location), Virginia (TECHNICAL DISCIPLINE)	VDOT (Division) or Co. Name (Location), Virginia (TECHNICAL DISCIPLINE)

REVISED	STATE	ROUTE	PROJECT	SHEET NO.
	VA.	337	0337-133-101, PE-102 RW-202, C-502	6

DESIGN FEATURES RELATING TO CONSTRUCTION OR TO REGULATION AND CONTROL OF TRAFFIC MAY BE SUBJECT TO CHANGE AS DEEMED NECESSARY BY THE DEPARTMENT

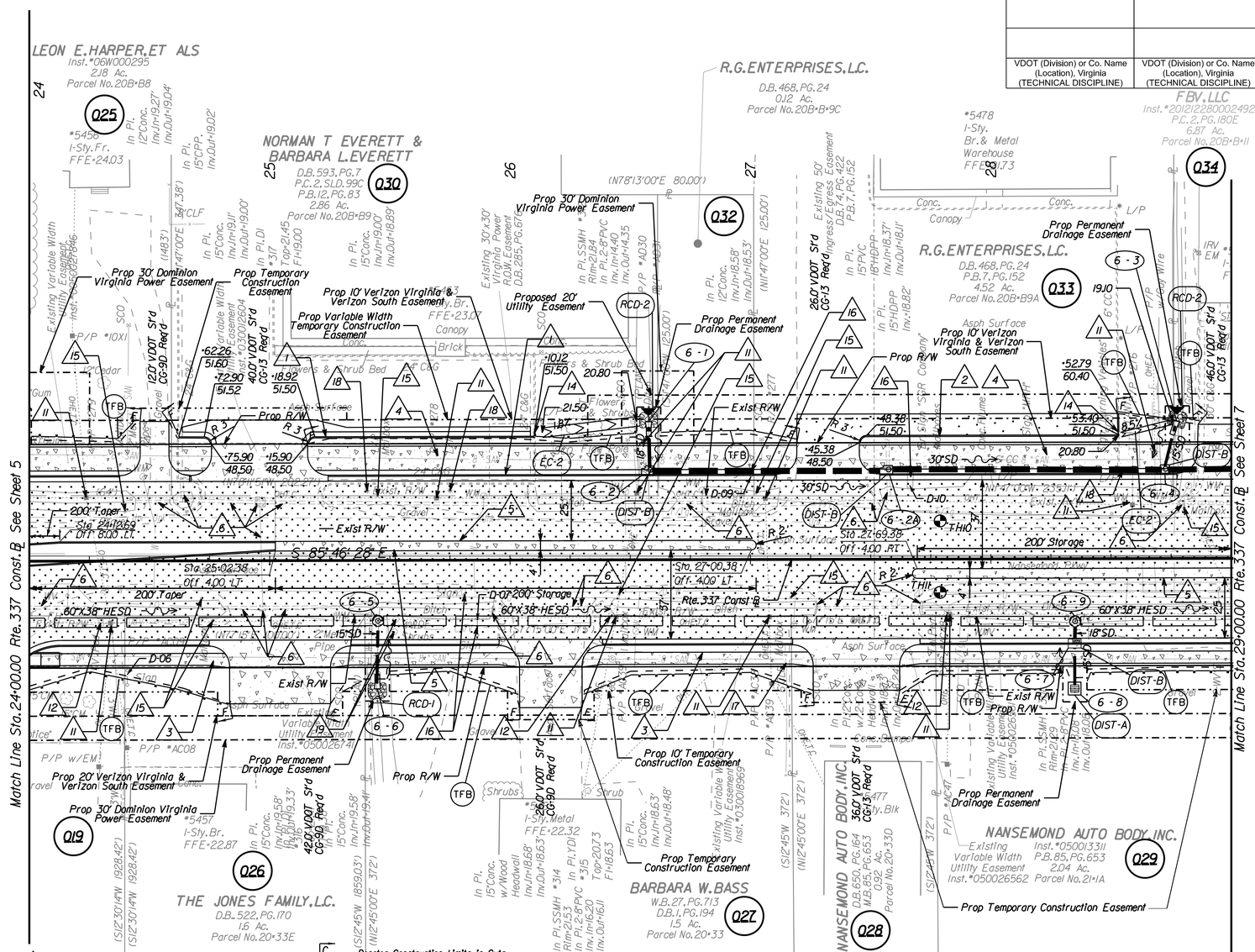

SUBSURFACE UTILITY OWNERS

1 HRSD
P.O.BOX 5911
VIRGINIA BEACH,VA 23471
Attn: Ryan Radspinner
Tel: (757) 460-4232

2 CITY OF SUFFOLK
Dept of Public Utilities
157 N.Main St.,Suite D
SUFFOLK,VA 23434
Attn: Larry Andrews
Tel: (757) 514-7683

3 VERIZON VIRGINIA,INC.
2920 Elmhurst Lane
Portsmouth,VA 23701-2739
Attn: Christopher "Luke" Lukens
Tel: (757) 465-5326

4 COLUMBIA GAS OF VIRGINIA
7001 HARBOR VIEW BLVD
SUFFOLK,Va 23435
Attn: Brett Fearnley
Tel: (757) 638-2414

5 CHARTER COMMUNICATIONS
216 Moore Avenue
Suffolk,Va.23434
Attn: Kim Mann
Tel: (757) 735- 4007

6 CITY OF PORTSMOUTH
Dept.of Public Utilities
Attn: Frank Wilson
Tel: (757) 393-8561
430 Meander Road
PORTSMOUTH, VA 23704

7 LEVEL 3 COMMUNICATIONS INC.
John Dalton
2600 ELTHAM AVE.STE 103
NORFOLK,VA.23513
Tel:(757) 777-7715

8 DOMINION VIRGINIA POWER
1600 HAMILTON AVE.
PORTSMOUTH,VA 23707
Attn: Bobby Wood
Tel: (757) 393-3817

9 VERIZON SOUTH INC.
3011 Hungary Spring Rd.,2nd Flr
RICHMOND,VA 23228
Attn: Anthony (Tony) French
TEL.(804) 772-7312

LEGEND

1. Combination Curb and Gutter (Std CG-6)
2. Curb (Std CG-2)
3. 5' Hydraulic Cement Concrete Sidewalk (4")
4. 10' Hydraulic Cement Concrete Sidewalk (4")
5. Median Strip (Std MS-1)
6. Remove Existing Storm Pipe/Structure
7. Not Used
8. Not Used
9. Not Used
10. Relocate Telecommunication Hand Hole (By Others)
11. Relocate Power Pole (By DVP)
12. Relocate Pedestal (By Others)
13. VDOT Std CR-1
14. Curb Slot
15. Remove and Relocate Mailbox
16. Remove and Relocate Sign
17. Remove Fence
18. Remove Light Pole
19. Remove Tree/Shrub
20. VDOT Std CG-12 Type B

C _ _ Denotes Construction Limits in Cuts

F _ _ Denotes Construction Limits in Fills

Note : Figures in parenthesis and dot - dot - dashed lines denote Temporary Easements.

Note : Figures in brackets and dot - dashed lines denote Permanent Easements.

Denotes Demolition of Pavement

Denotes New Asphalt Pavement

Denotes Pavement Mill and Overlay

REFERENCES (PROFILES, DETAIL & DRAINAGE DESCRIPTION SHEETS, ETC.)

Profile Sheet	6A
Drainage Descr.	2C
Entrance Profile	8(1)
Pavement Markings, Marker & Signing Plan	9(6)
Utility Plan & Profile	10(6)
Lighting & Landscape Plan	11(6)

SCALE 0 25' 50'

$TIME$STAMP$

PROJECT	SHEET NO.
0337-133-101	6

d4146006.dgn 5/20/2016 1:33:57 PM

DGN $REF001 $REF002 $REF003 $REF004 $REF005 $REF006
$DGNLEV $LEV001 $LEV002 $LEV003 $LEV004 $LEV005 $LEV006

PROJECT MANAGER Sherry Farley P.E. CITY OF SUFFOLK (757) 514-7703
SURVEYED BY PML INC. (757) 368-0945
DESIGN SUPERVISED BY Ian Johnston P.E. (757) 455-5800
DESIGN BY Clark Nexsen (757) 455-5800

REVISED	STATE	STATE ROUTE	STATE PROJECT	SHEET NO.
	VA.	337	0337-133-101, PE-102, RW-202, C-502	6A

DESIGN FEATURES RELATING TO CONSTRUCTION OR TO REGULATION AND CONTROL OF TRAFFIC MAY BE SUBJECT TO CHANGE AS DEEMED NECESSARY BY THE DEPARTMENT

VDOT (Division) or Co. Name
(Location), Virginia
(TECHNICAL DISCIPLINE)

FINAL PLANS

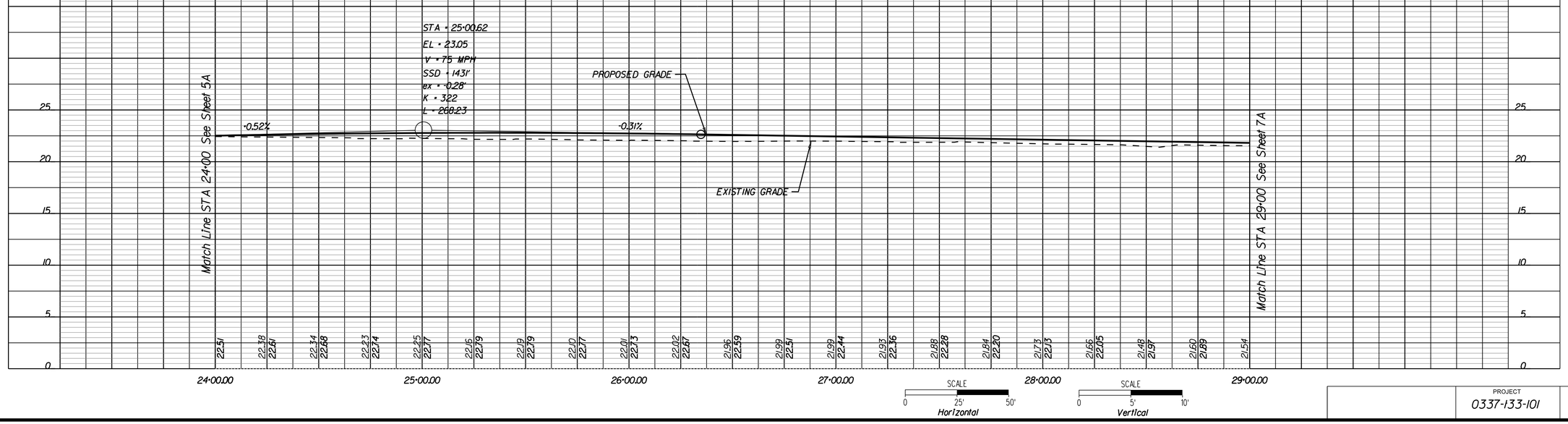

PROJECT	SHEET NO.
0337-133-101	6A

$TIME$ $STAMP$

d4146006a.dgn 5/20/2016 1:33:58 PM

DGN $REF001 $REF002 $REF003 $REF004 $REF005 $REF006
$DGNLEV $LEV001 $LEV002 $LEV003 $LEV004 $LEV005 $LEV006

PROJECT MANAGER Sherry Earley, P.E., City of Suffolk (757) 514-7703
SURVEYED BY EMI, INC. (757) 368-0945
DESIGN SUPERVISED BY Ian Johnston, P.E., Clark Nexsen (757) 455-5800
DESIGNED BY Clark Nexsen (757) 455-5800

FINAL PLANS

REVISED	STATE	STATE ROUTE	STATE PROJECT	SHEET NO.
	VA.	337	0337-133-101, PE-102 RW-202, C-502	7

DESIGN FEATURES RELATING TO CONSTRUCTION OR TO REGULATION AND CONTROL OF TRAFFIC MAY BE SUBJECT TO CHANGE AS DEEMED NECESSARY BY THE DEPARTMENT

VDOT (Division) or Co. Name (Location), Virginia (TECHNICAL DISCIPLINE)

VDOT (Division) or Co. Name (Location), Virginia (TECHNICAL DISCIPLINE)

SUBSURFACE UTILITY OWNERS

1 HRSD
P.O. BOX 5911
VIRGINIA BEACH, VA 23471
Attn: Ryan Radspinner
Tel: (757) 460-4232

2 CITY OF SUFFOLK
Dept of Public Utilities
157 N. Main St., Suite D
SUFFOLK, VA 23434
Attn: Larry Andrews
Tel: (757) 514-7683

3 VERIZON VIRGINIA, INC.
2920 Elmhurst Lane
Portsmouth, VA 23701-2739
Attn: Christopher "Luke" Lukens
Tel: (757) 465-5326

4 COLUMBIA GAS OF VIRGINIA
7001 HARBOR VIEW BLVD
SUFFOLK, Va 23435
Attn: Brett Fearnley
Tel: (757) 638-2414

5 CHARTER COMMUNICATIONS
216 Moore Avenue
Suffolk, Va. 23434
Attn: Kim Mann
Tel: (757) 735-4007

6 CITY OF PORTSMOUTH
Dept. of Public Utilities
Attn: Frank Wilson
Tel: (757) 393-8561
430 Meander Road
PORTSMOUTH, VA 23704

7 LEVEL 3 COMMUNICATIONS INC.
John Dalton
2600 ELTHAM AVE, STE 103
NORFOLK, VA. 23513
Tel: (757) 777-7715

8 DOMINION VIRGINIA POWER
1600 HAMILTON AVE.
PORTSMOUTH, VA 23707
Attn: Bobby Wood
Tel: (757) 393-3817

9 VERIZON SOUTH INC.
301 Hungary Spring Rd, 2nd Flr
RICHMOND, VA 23228
Attn: Anthony (Tony) French
TEL. (804) 772-7312

LEGEND

1. Combination Curb and Gutter (Std CG-6)
2. Curb (Std CG-2)
3. 5' Hydraulic Cement Concrete Sidewalk (4")
4. 10' Hydraulic Cement Concrete Sidewalk (4")
5. Median Strip (Std MS-1)
6. Remove Existing Storm Pipe/Structure
7. Not Used
8. Not Used
9. Not Used
10. Relocate Telecommunication Hand Hole (By Others)
11. Relocate Power Pole (By DVP)
12. Relocate Pedestal (By Others)
13. VDOT Std CR-1
14. Curb Slot
15. Remove and Relocate Mailbox
16. Remove and Relocate Sign
17. Remove Fence
18. Remove Light Pole
19. Remove Tree/Shrub
20. VDOT Std CG-12 Type B

C ..... Denotes Construction Limits In Cuts

F _ _ Denotes Construction Limits In Fills

Note: Figures in parenthesis and dot - dot - dashed lines denote Temporary Easements.

Note: Figures in brackets and dot - dashed lines denote Permanent Easements.

Denotes Demolition of Pavement

Denotes New Asphalt Pavement

Denotes Pavement Mill and Overlay

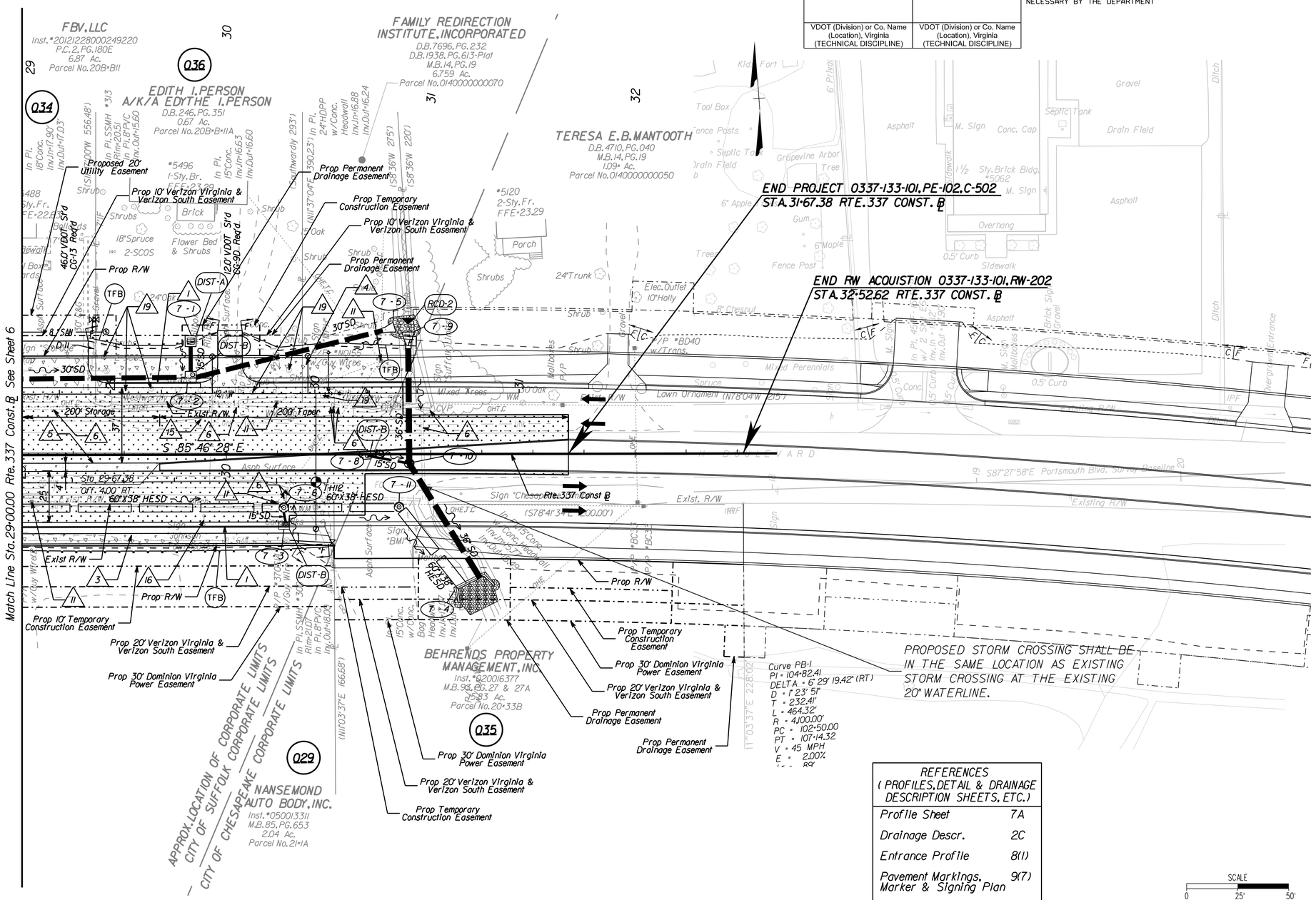

REFERENCES (PROFILES, DETAIL & DRAINAGE DESCRIPTION SHEETS, ETC.)	
Profile Sheet	7A
Drainage Descr.	2C
Entrance Profile	8(1)
Pavement Markings, Marker & Signing Plan	9(7)
Utility Plan & Profile	10(7)
Lighting & Landscape Plan	11(7)

SCALE 0 25' 50'

PROJECT	SHEET NO.
0337-133-101	7

$TIME$ $STAMP$

d4146007.dgn 5/20/2016 1:33:59 PM

DGN $REF001 $REF002 $REF003 $REF004 $REF005 $REF006
$DGNLEV $LEV001 $LEV002 $LEV003 $LEV004 $LEV005 $LEV006

PROJECT MANAGER Stacey Earley, P.E., City of Suffolk (757)514-7703
SURVEYED BY PWI, INC. (757)368-0945
DESIGN SUPERVISED BY Ian Johnston, P.E., Clark Nexsen (757)455-5800
DESIGNED BY Clark Nexsen (757)455-5800

REVISED	STATE	STATE ROUTE	STATE PROJECT	SHEET NO.
	VA.	337	0337-133-101, PE-102, RW-202, C-502	7A

DESIGN FEATURES RELATING TO CONSTRUCTION OR TO REGULATION AND CONTROL OF TRAFFIC MAY BE SUBJECT TO CHANGE AS DEEMED NECESSARY BY THE DEPARTMENT

VDOT (Division) or Co. Name
(Location), Virginia
(TECHNICAL DISCIPLINE)

FINAL PLANS

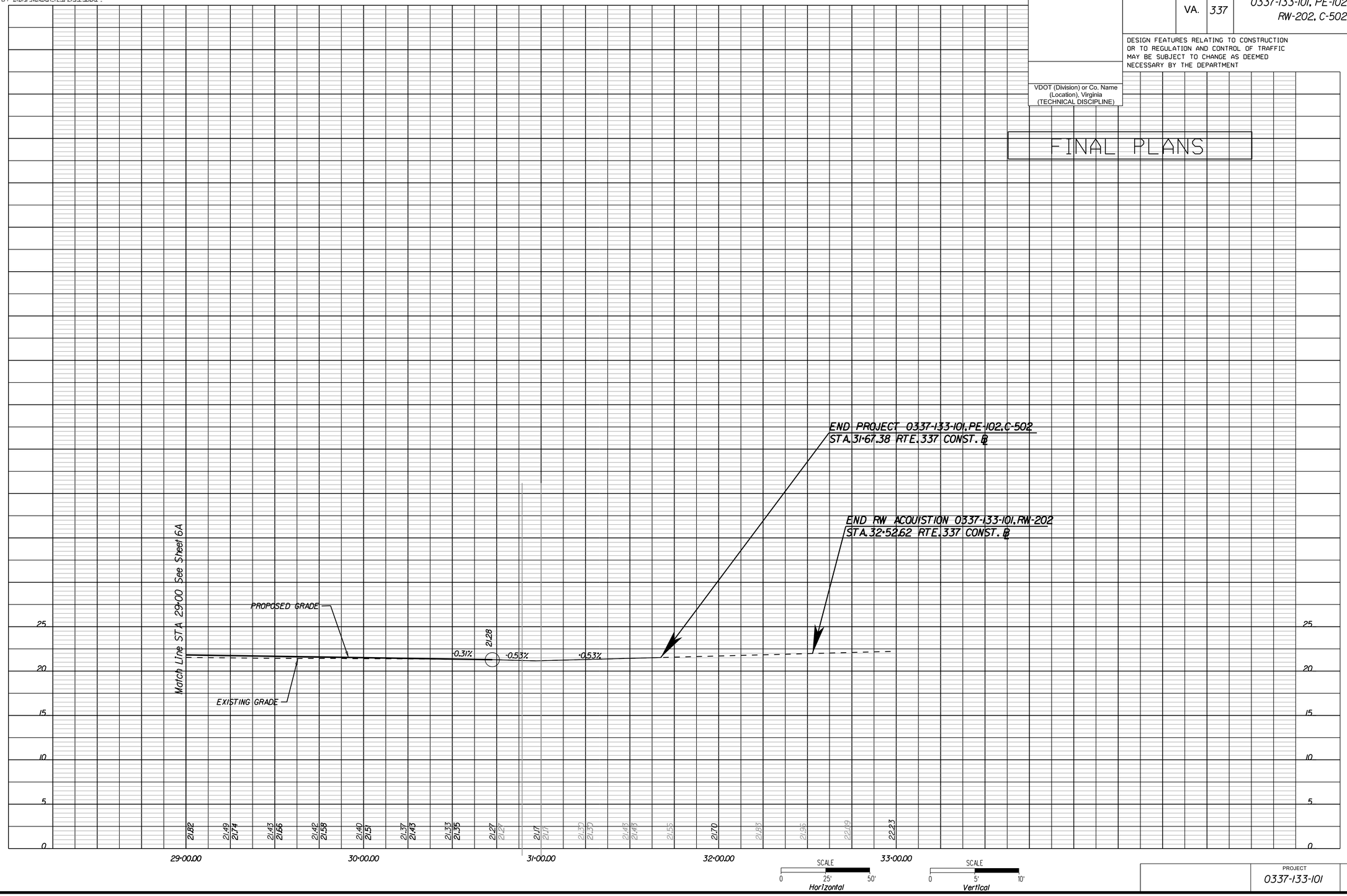

PROJECT	SHEET NO.
0337-133-101	7A

$TIME$STMP

d4146007a.dgn 5/20/2016 1:34:00 PM

DGN $REF001 $REF002 $REF003 $REF004 $REF005 $REF006
$DGNLEV $LEV001 $LEV002 $LEV003 $LEV004 $LEV005 $LEV006

PROJECT MANAGER Sherry Earley, P.E., City of Suffolk (757) 514-7703
SURVEYED BY, DATE PMI, INC. (757) 368-0945
DESIGN BY Joe Johnston, P.E., Clark Nexsen (757) 455-5800
DESIGN BY CLARK NEXSEN (757) 455-5800

REVISED	STATE	STATE ROUTE	STATE PROJECT	SHEET NO.
	VA.	337	0337-133-101, PE-102 RW-202, C-502	8(1)

DESIGN FEATURES RELATING TO CONSTRUCTION OR TO REGULATION AND CONTROL OF TRAFFIC MAY BE SUBJECT TO CHANGE AS DEEMED NECESSARY BY THE DEPARTMENT

VDOT (Division) or Co. Name
(Location), Virginia
(TECHNICAL DISCIPLINE)

FINAL PLANS

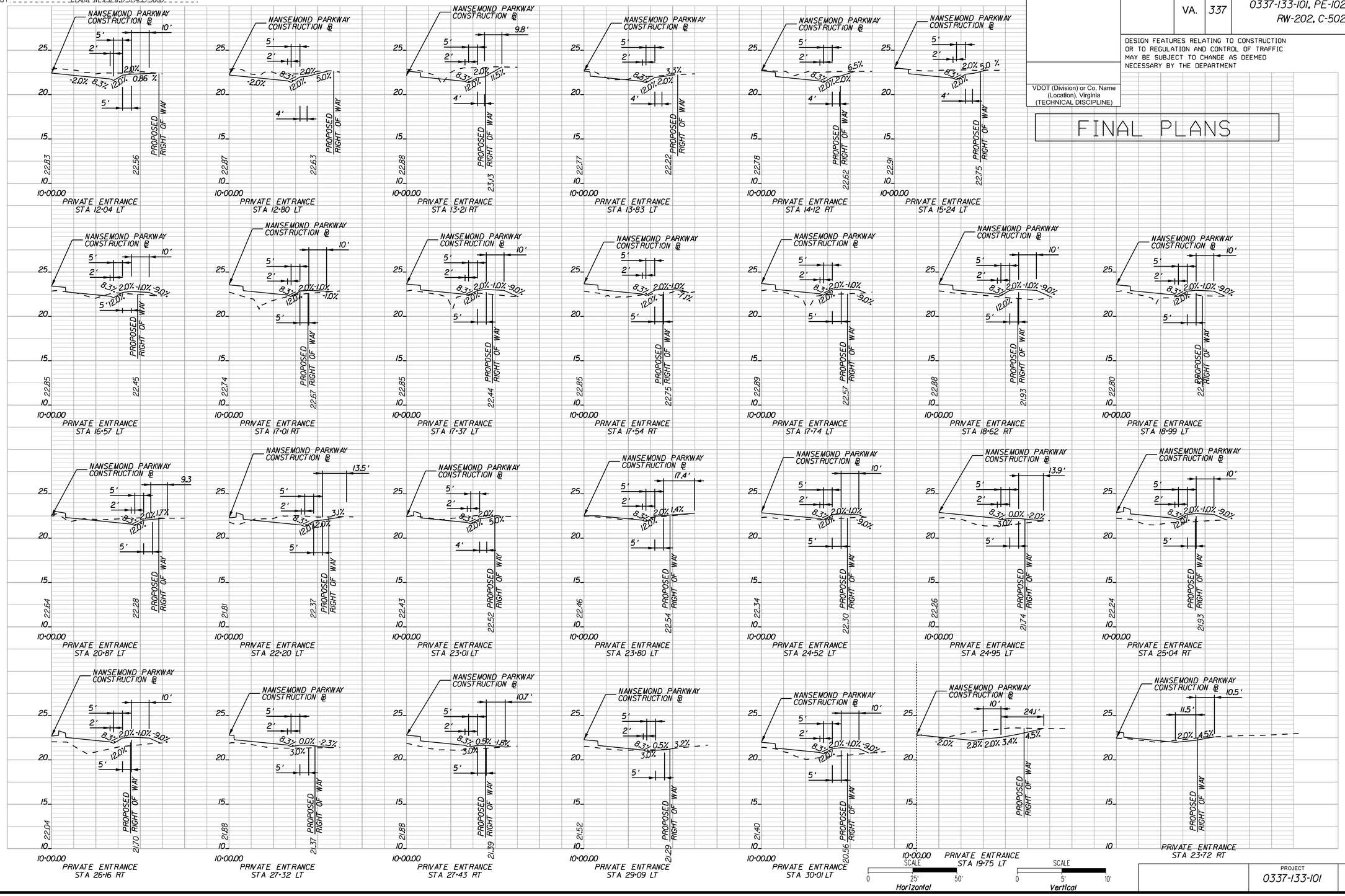

PROJECT	SHEET NO.
0337-133-101	8(1)

$TIME$ $STAMP$

d4146008(1).dgn 5/20/2016 1:34:00 PM

DGN $REF001 $REF002 $REF003 $REF004 $REF005 $REF006
$DGNLEV $LEV001 $LEV002 $LEV003 $LEV004 $LEV005 $LEV006

PROJECT MANAGER Sherry Earley, P.E., City of Suffolk (757) 514-7703
SURVEYED BY PMI, INC. (757) 368-0945
DESIGN SUPERVISED BY Ian Johnston, P.E., Clark Nexsen (757) 455-5800
DESIGNED BY Clark Nexsen (757) 455-5800

PAVEMENT MARKING STANDARDS AND DETAILS

VDOT (Division) or Co. Name (Location), Virginia (TECHNICAL DISCIPLINE)	VDOT (Division) or Co. Name (Location), Virginia (TECHNICAL DISCIPLINE)

REVISED	STATE	STATE ROUTE	STATE PROJECT	SHEET NO.
	VA.	337	0337-133-101, PE-102 RW-202, C-502	9(1)

DESIGN FEATURES RELATING TO CONSTRUCTION OR TO REGULATION AND CONTROL OF TRAFFIC MAY BE SUBJECT TO CHANGE AS DEEMED NECESSARY BY THE DEPARTMENT

NOTE : THIS SHEET IS FOR PAVEMENT MARKINGS STANDARDS AND DETAILS ONLY; IT IS NOT TO BE USED FOR LANE LAYOUT, GEOMETRIC DESIGN OR OTHER TRAFFIC ISSUES. SUBJECT TO APPROVAL FOR EACH PROJECT BY THE CITY TRAFFIC ENGINEER'S OFFICE

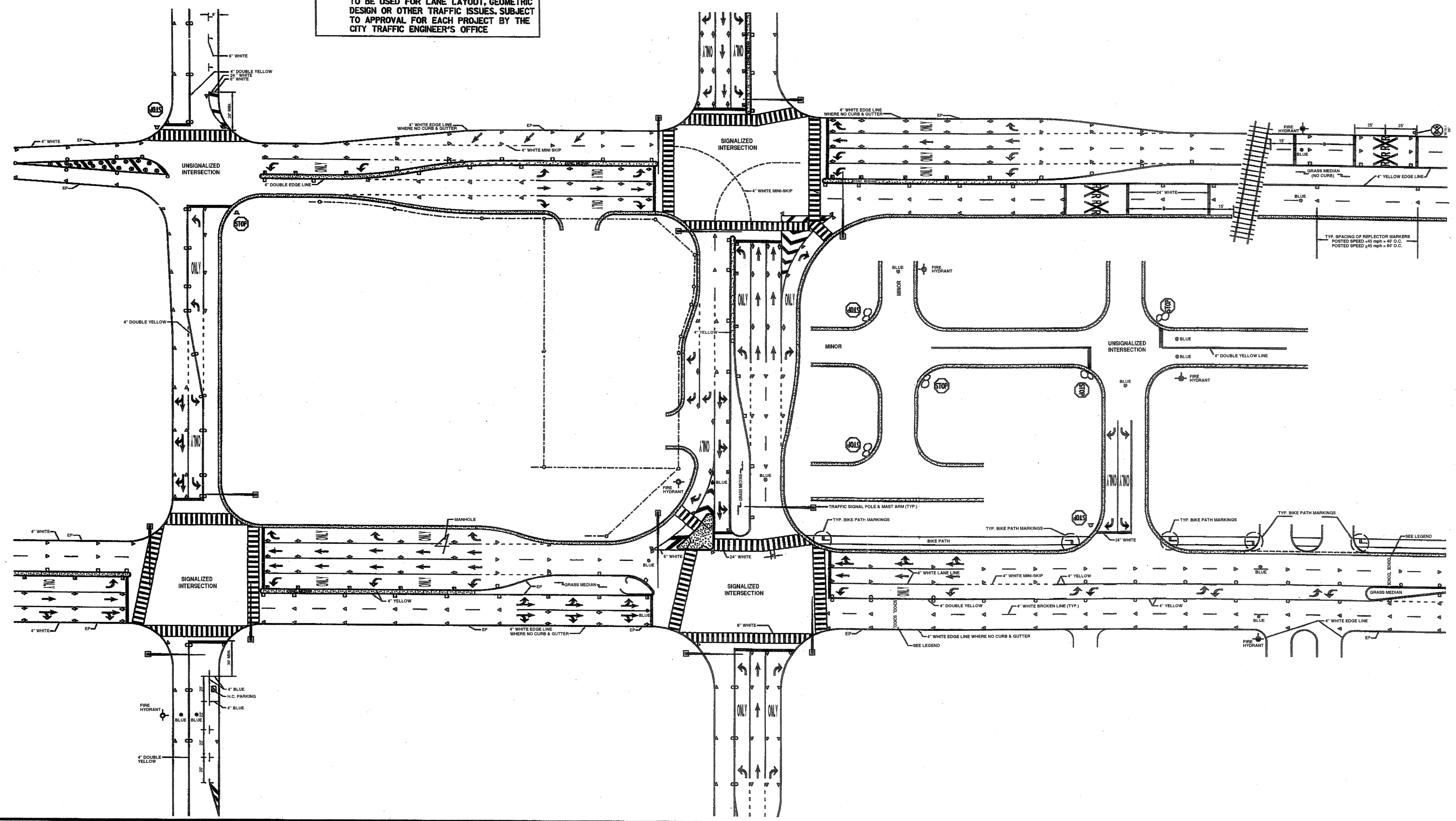

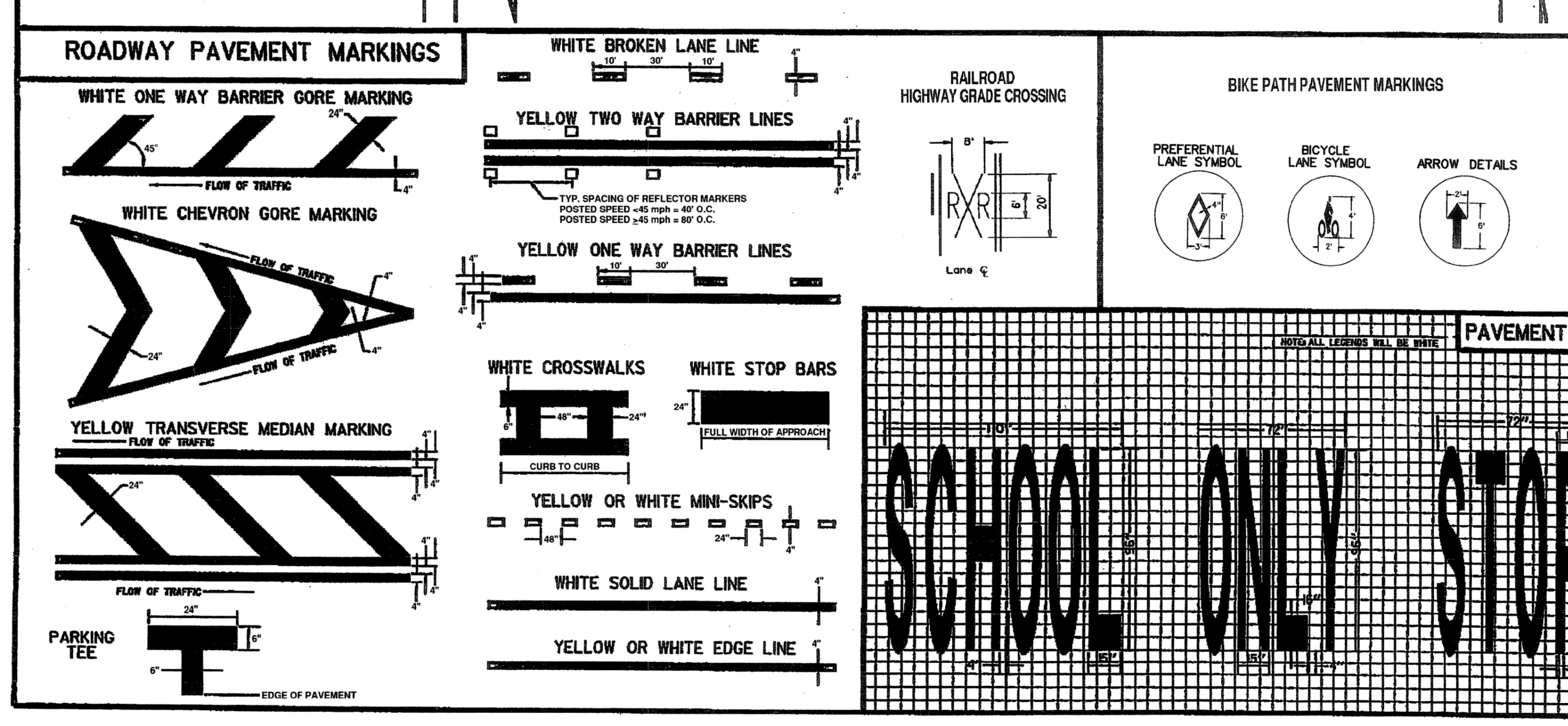

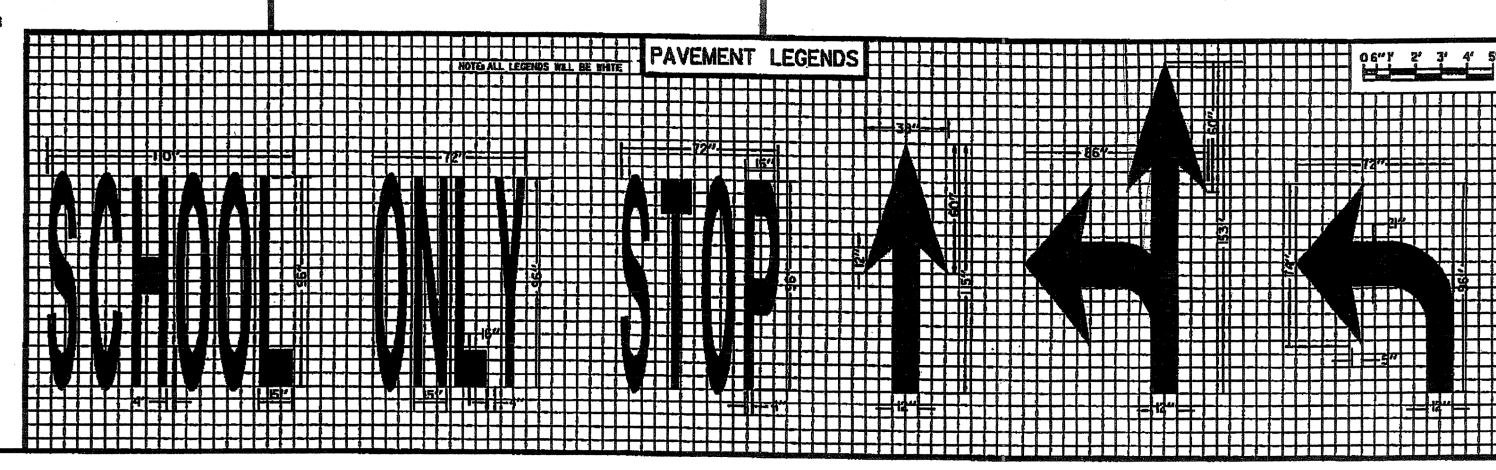

THIS DOCUMENT HAS BEEN USED WITH THE PERMISSION OF THE CITY OF VIRGINIA BEACH DEPARTMENT OF PUBLIC WORKS.

COMMONWEALTH OF VIRGINIA
8/30/07
ROBERT E. LEWIS
Lic. No. 034389
PROFESSIONAL ENGINEER

CITY OF SUFFOLK
DEPARTMENT OF PUBLIC WORKS

PAVEMENT MARKING STANDARDS & DETAILS

City of Suffolk Pavement Marking Standards

Pavement Markings and Markers

Scope: The purpose of these Specifications is to provide the minimum requirements of the City of Suffolk for any Pavement Marking activity that goes on in the Public Right of Way. It is to be in addition to the VDOT Road and Bridge Specifications. All references made to the VDOT Road and Bridge Specifications refer to the January 2002 edition.

Materials:
1. All Pavement Marking Materials (including paint, thermoplastic, and glass beads) shall conform to all VDOT Specifications.
2. Type A paint is only to be used by the direction of the office of the City Traffic Engineer.
3. ***Thermoplastic material shall be of alkyd base binder.***

Section I. Lane, Edge and Centerline Markings

1.1 White lane lines, either solid or skip lines will be 4" unless otherwise stated in plans.
1.2 Lane lines on an approach to a signalized intersection will be solid white for a distance of not less than 150' measured from Stop Bar or equal to the length of the Solid Lane Lines, for adjacent auxiliary (Right and or Left Turn Lane Lines).
1.3 Lane Lines that delineate the edge of the Turn Lane will be 4" Solid white lines and they will continue continuously from the beginning of the full width of the turn lane to the Stop Bar. Mini Skips will be extended from the lane line to the end of the transition.
1.4 Edge Lines, when noted on the plan will be solid white lines 4" wide, but solid yellow lines are to be used when adjacent to a median which separates opposing directions of vehicular traffic. Edge Lines are not to be used with curb and gutter on the outside lane.
1.5 Centerlines on an undivided highway will be solid double yellow lines 4" wide separated by a 4" space.
1.6 On minor approaches to an arterial or collector, lane lines, edge lines, and or centerlines will be extended a minimum distance of 150' from the Stop Bar.

Section II. Crosswalks

2.1 Crosswalk Lines will be solid white lines, 6" wide, marking both edges of the crosswalk area.
2.2 Crosswalk Lines will extend from edge of pavement to edge of pavement or edge of shoulder as possible.
2.3 Lines forming a crosswalk will be parallel.
2.4 The width of a crosswalk will be 8', measuring from center of 6" line to center of 6" line. In heavy traffic areas crosswalks will be 10' in width.
2.5 In heavy traffic areas outside of the Downtown business area, crosswalks will have 2' wide consecutive white rectangles that will cover the entire width of the crosswalk perpendicular to the 6" white lines, spacing will be approximately 6' on center. They will be located so as to avoid normal wheel paths.

Section III. Median Markings

3.1 Center Lane Left Turn Only (Two way left turn lanes or Suicide Lanes) will consist of two sets of one way barrier lines. 10' broken yellow lines with 30' space will be located inside Solid yellow lines.
3.2 Transverse median markings will consist of 2' yellow lines.

Section IV. Gore Markings

4.1 Markings will consist of 2' solid white or yellow transverse lines. Spaced as required by note #3 in Section 4.
4.2 Chevrons will be used when specified in approved plans.
4.3 2' Median, Gore, and Chevron markings will be spaced according to the posted speed limits as follows:

Spacing will match Posted speed limit up to a maximum spacing of 35'.

Section V. Stop Bars

5.1 Two feet wide solid white stop bars will completely transverse all traffic lanes on each approach at a signalized intersection, or approaches to an intersection with a "Stop" Sign control at major collectors and arterial roadways.
5.2 Stop Bars will be located at a minimum of 4' in advance of a crosswalk, unless otherwise specified on an approved plan.

Section VI. Pavement Legends

6.1 Legends will be transversely aligned across each lane, the distance between the arrow symbol and the Stop Bar will be 8'
6.2 Arrows and Legends will not be placed prior to the Solid White Lane Lines.
6.3 Word Messages will be located in advance of its accompanying symbol by a distance of not less than 32', nor more than 80' from the symbol. After the 5th legend in a turn lane the spacing between legends may go to 100' maximum.
6.4 For Auxiliary Right and or Left turn Lanes on all approaches, legends will be centered within the lane. They will continue the length of the lane beginning and ending with a symbol. Thru lanes will not be installed on an uncontrolled thru street at intersection without a signal
6.5 Merge Arrows will be spaced according to the posted Speed Limit as follows:

a. Posted Speed <35 mph=80'
b. Posted Speed >35mph =120'

Section VII. Bicycle Lanes

7.1 Pavement markings consisting of arrow, bicycle and preferential lane symbols shall be placed at the beginning of the bicycle lane at right turn lanes. They shall also be placed at the end of the bicycle lane at right turn lanes if the solid white line separating the bicycle lane from the right turn lane is greater then 100' in length.
7.2 Bicycle lane symbols shall be placed a maximum of 500' apart.
7.3 The bicycle lane stripe shall be 4 feet from the edge of pavement on roads with curb & gutter unless otherwise noted on the plans ors existing markings indicate otherwise.
7.4 The bicycle lane stripe shall be 5 feet from the face of curb on roadways without a gutter pan unless otherwise noted on the plans or existing markings indicate otherwise.

Section VIII. Parking Space Markings

8.1 All on street Parking Spaces will be a minimum of 20' long and a minimum of 8' wide.
8.2 All Parking Spaces will be marked with 6" lines.

Section IX. General Notes

9.1 Installation and Materials for all Pavement Markings and Legends will be in accordance with the City of Suffolk Department of Public Works/Traffic Engineering Division Specifications set forth in this document unless otherwise stated on the plans or in contract documents.
9.2 The contractor will note all special provisions of the contract specifically with the regard to Rate of Application, Maintenance of Traffic, Restricted
9.3 Working Hours, and or Restricted Weather Conditions.
The Contractor will remove all previous Pavement Markings which in the opinion of the engineer will conflict with the new Pavement Markings. All eradication will be in conformance with the VDCT Specifications.
9.4 Before any markings will be applied in the Right of Way, the City Traffic Engineer's office must be notified 72 hours in advance. If this office is not notified and the markings do not meet with what the City Traffic Engineer's office considers proper, the markings will be eradicated and replaced at the sole expense of the contractor.
9.5 No Pavement Markings will be applied until 24 hours after rainfall, unless otherwise directed by the City Traffic Engineer's office.
9.6 Snow Plowable Pavement Markers will be installed only by direction of the City Traffic Engineer's office.
9.7 Only Alkyd Based Thermoplastic is to be used unless otherwise directed by the City Traffic Engineer's Office.
9.8 All pavement markings installed in the City's Right of Way, whether "Temporary or Permanent", will contain glass beads.

FINAL PLANS

PROJECT	SHEET NO.
0337-133-101	9(1)

$TIME$STAMP$

PROJECT MANAGER Sherry, Earley, P.E., CITY OF SUFFOLK (757) 514-7703
SURVEYED BY EMI, INC. (757) 368-0945
DESIGN SUPERVISED BY Ira Johnston, P.E., Clark Nexsen (757) 455-5800
DESIGN BY Clark Nexsen (757) 455-5800

FINAL PLANS

REVISED	STATE	ROUTE	PROJECT	SHEET NO.
	VA.	337	0337-133-101, PE-102 RW-202, C-502	9(3)

DESIGN FEATURES RELATING TO CONSTRUCTION OR TO REGULATION AND CONTROL OF TRAFFIC MAY BE SUBJECT TO CHANGE AS DEEMED NECESSARY BY THE DEPARTMENT

VDOT (Division) or Co. Name (Location), Virginia (TECHNICAL DISCIPLINE)

VDOT (Division) or Co. Name (Location), Virginia (TECHNICAL DISCIPLINE)

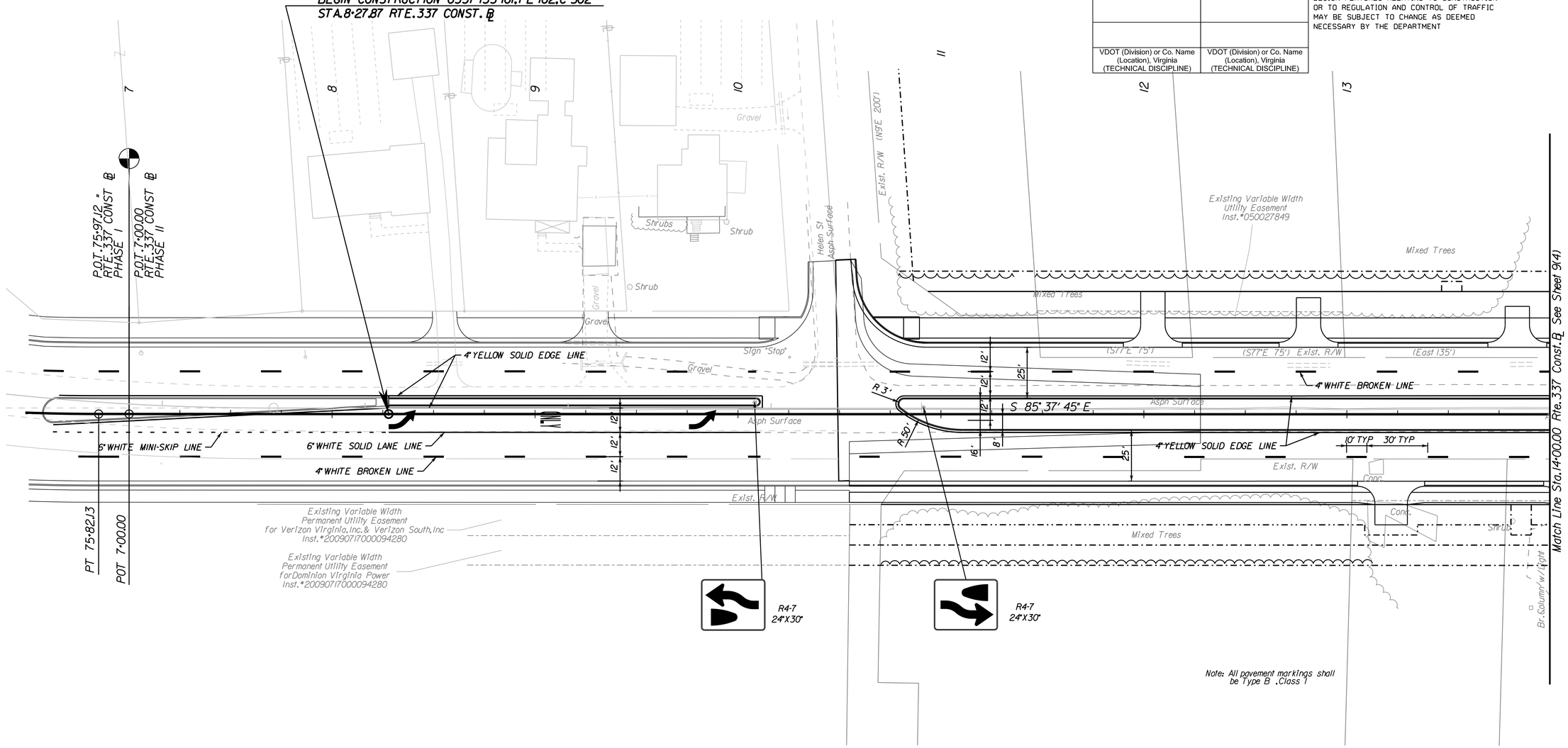

Note: All pavement markings shall be Type B, Class 1

REFERENCES (PROFILES, DETAIL & DRAINAGE DESCRIPTION SHEETS, ETC.)	
Plan Sheet	3
Drainage Descr.	2C
Entrance Profile	8(1)
Utility Plan & Profile	10(3)
Lighting & Landscape Plan	11(3)

SCALE
0 25' 50'

PROJECT	SHEET NO.
0337-133-101	9(3)

$TIME$STAMP$

DGN $REF001 $REF002 $REF003 $REF004 $REF005 $REF006
$DGNLEV $LEV001 $LEV002 $LEV003 $LEV004 $LEV005 $LEV006

PROJECT MANAGER Sherry Earley P.E. City of Suffolk (757) 514-7703
SURVEYED BY EMI INC. (757) 368-0945
DESIGN SUPERVISED BY Ian Johnston P.E. Clark Nexsen (757) 455-5800
DESIGNED BY Clark Nexsen (757) 455-5800

FINAL PLANS

VDOT (Division) or Co. Name (Location), Virginia (TECHNICAL DISCIPLINE)	VDOT (Division) or Co. Name (Location), Virginia (TECHNICAL DISCIPLINE)

REVISED	STATE	ROUTE	PROJECT	SHEET NO.
	VA.	337	0337-133-101, PE-102 RW-202, C-502	9(4)

DESIGN FEATURES RELATING TO CONSTRUCTION OR TO REGULATION AND CONTROL OF TRAFFIC MAY BE SUBJECT TO CHANGE AS DEEMED NECESSARY BY THE DEPARTMENT

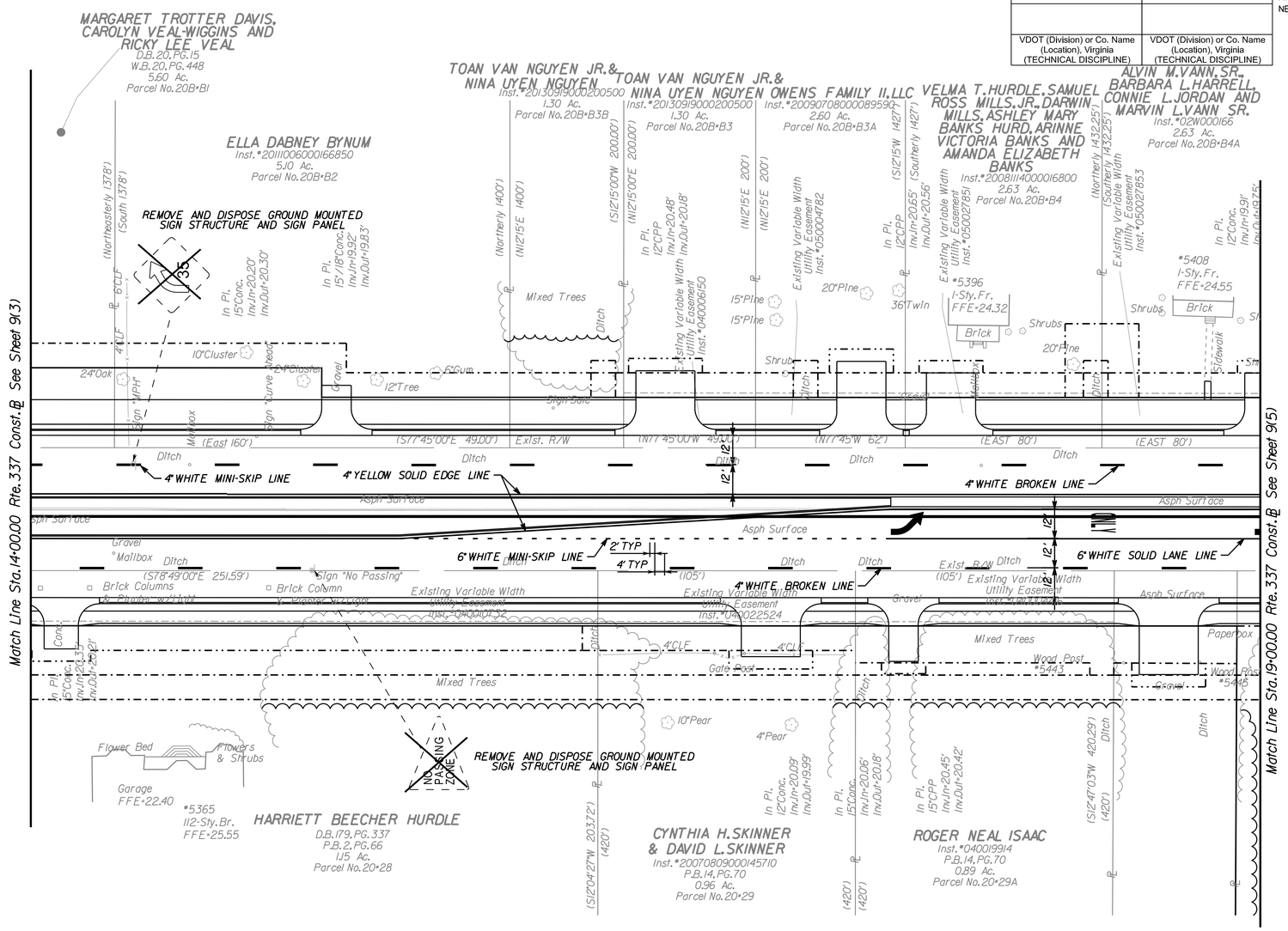

REFERENCES (PROFILES, DETAIL & DRAINAGE DESCRIPTION SHEETS, ETC.)	
Plan Sheet	4
Drainage Descr.	2C
Entrance Profile	8(1)
Utility Plan & Profile	10(4)
Lighting & Landscape Plan	11(4)

SCALE 0 25' 50'

PROJECT	SHEET NO.
0337-133-101	9(4)

$TIME$ST.MP$

d4146009(4).dgn 5/20/2016 1:34:34 PM

PROJECT MANAGER Sherry Earley, P.E., City of Suffolk (757) 514-7703
SURVEYED BY EMI, INC. (757) 368-0945
DESIGN SUPERVISED BY Ian Johnston, P.E., Clark Nexsen (757) 455-5800
DESIGNED BY Clark Nexsen (757) 455-5800

FINAL PLANS

VDOT (Division) or Co. Name (Location), Virginia (TECHNICAL DISCIPLINE)	VDOT (Division) or Co. Name (Location), Virginia (TECHNICAL DISCIPLINE)

REVISED	STATE	ROUTE	PROJECT	SHEET NO.
	VA.	337	0337-133-101, PE-102 RW-202, C-502	9(5)

DESIGN FEATURES RELATING TO CONSTRUCTION OR TO REGULATION AND CONTROL OF TRAFFIC MAY BE SUBJECT TO CHANGE AS DEEMED NECESSARY BY THE DEPARTMENT

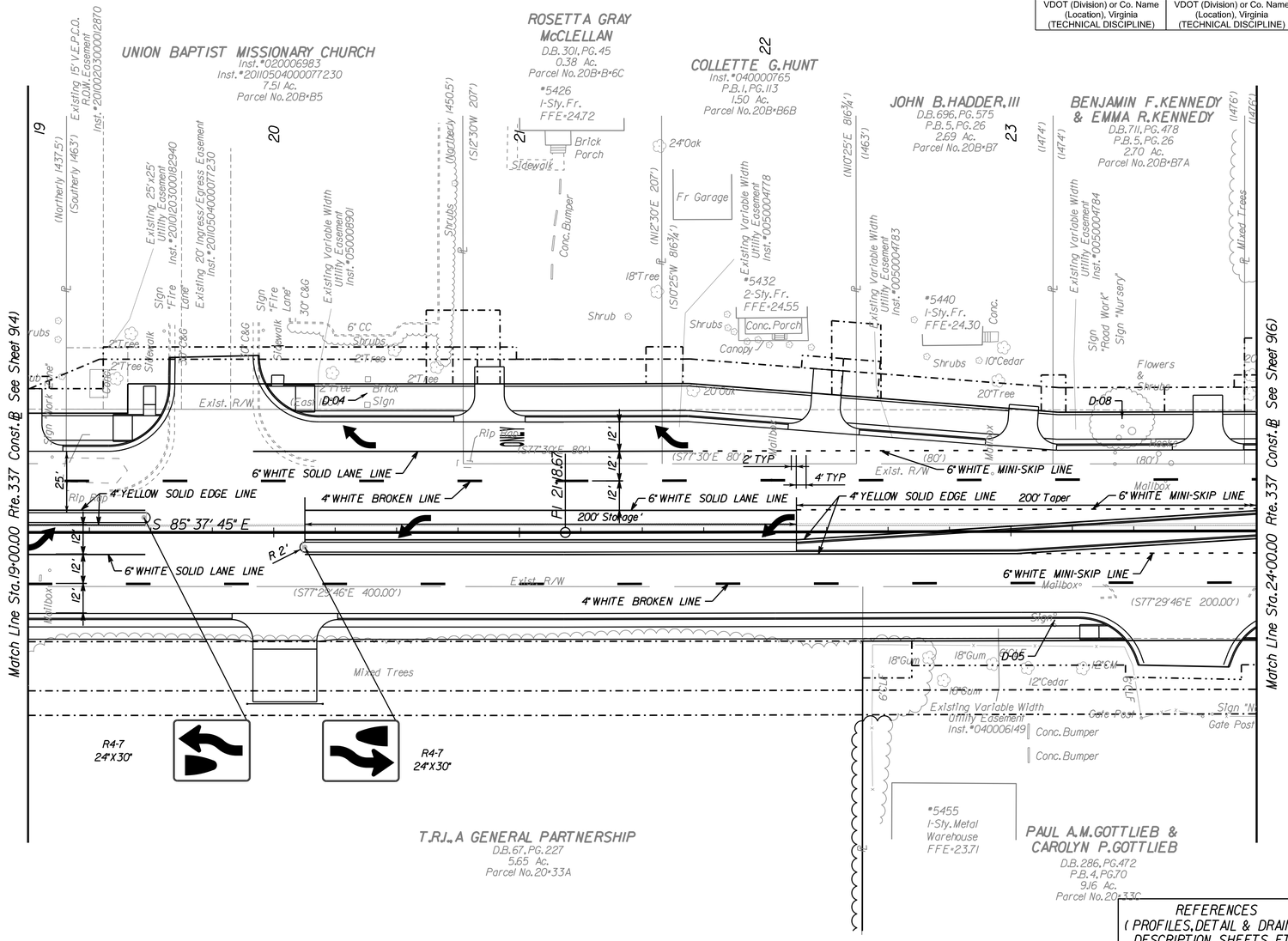

REFERENCES (PROFILES, DETAIL & DRAINAGE DESCRIPTION SHEETS, ETC.)	
Plan Sheet	5
Drainage Descr.	2C
Entrance Profile	8(1)
Utility Plan & Profile	10(5)
Lighting & Landscape Plan	11(5)

SCALE 0 25' 50'

PROJECT	SHEET NO.
0337-133-101	9(5)

$TIME$ST.MP$

PROJECT MANAGER Sherry Earley, P.E., City of Suffolk (757) 514-7703
SURVEYED BY EMI, INC. (757) 368-0945
DESIGN SUPERVISED BY Ian Johnston, P.E., Clark Nexsen (757) 455-5800
DESIGN BY Clark Nexsen (757) 455-5800

FINAL PLANS

VDOT (Division) or Co. Name (Location), Virginia (TECHNICAL DISCIPLINE)	VDOT (Division) or Co. Name (Location), Virginia (TECHNICAL DISCIPLINE)

REVISED	STATE	ROUTE	PROJECT	SHEET NO.
	VA.	337	0337-133-101, PE-102 RW-202, C-502	9(6)

DESIGN FEATURES RELATING TO CONSTRUCTION OR TO REGULATION AND CONTROL OF TRAFFIC MAY BE SUBJECT TO CHANGE AS DEEMED NECESSARY BY THE DEPARTMENT

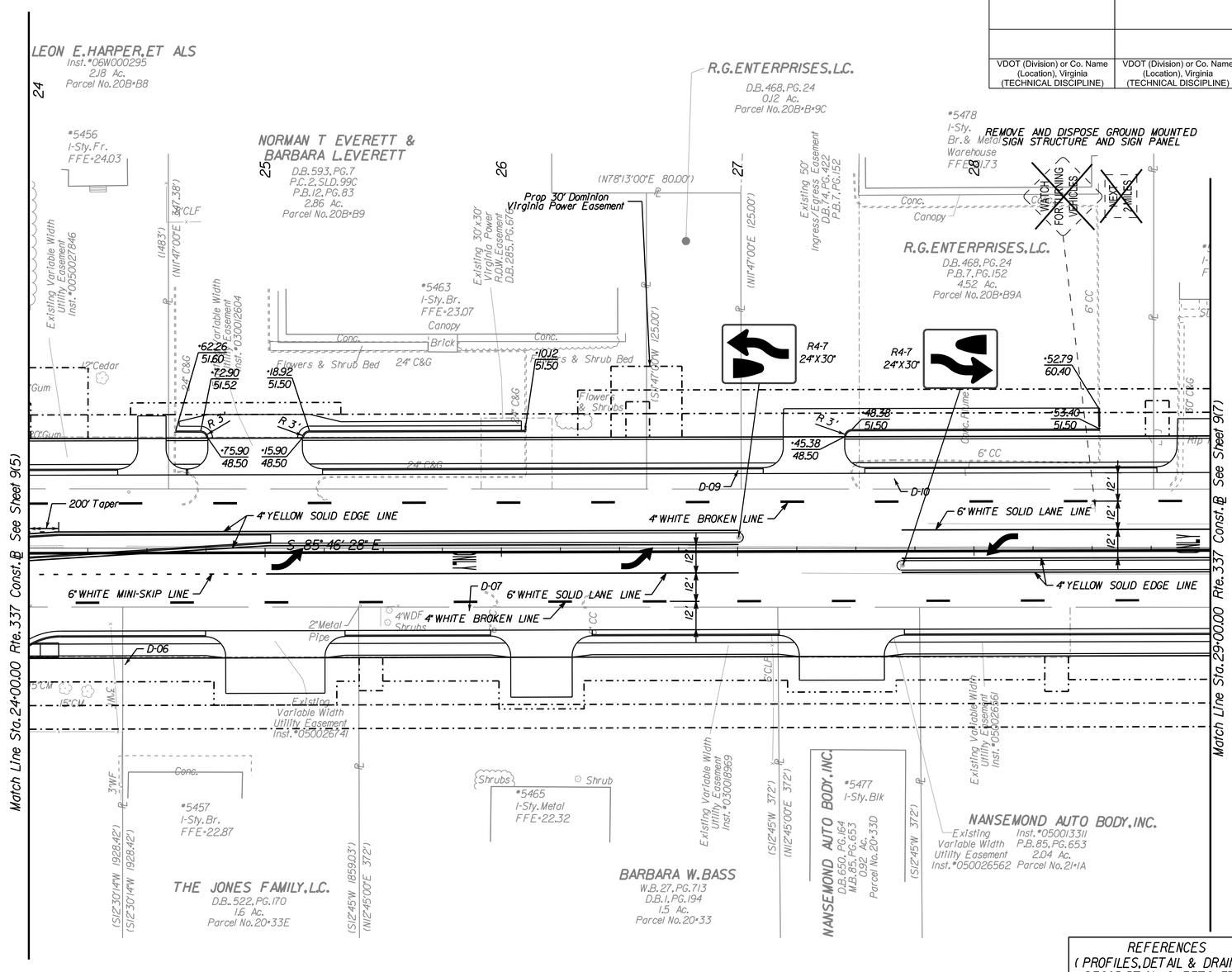

REFERENCES (PROFILES, DETAIL & DRAINAGE DESCRIPTION SHEETS, ETC.)	
Plan Sheet	6
Drainage Descr.	2C
Entrance Profile	8(1)
Utility Plan & Profile	10(6)
Lighting & Landscape Plan	11(6)

SCALE 0 25' 50'

PROJECT	SHEET NO.
0337-133-101	9(6)

PROJECT MANAGER Sherry Earley, P.E., City of Suffolk (757) 514-7703
SURVEYED BY EMI, INC. (757) 368-0945
DESIGN SUPERVISED BY Ian Johnston, P.E., Clark Nexsen (757) 455-5800
DESIGNED BY Clark Nexsen (757) 455-5800

FINAL PLANS

REVISED	STATE	ROUTE	PROJECT	SHEET NO.
	VA.	337	0337-133-101, PE-102 RW-202, C-502	9(7)

DESIGN FEATURES RELATING TO CONSTRUCTION OR TO REGULATION AND CONTROL OF TRAFFIC MAY BE SUBJECT TO CHANGE AS DEEMED NECESSARY BY THE DEPARTMENT

VDOT (Division) or Co. Name (Location), Virginia (TECHNICAL DISCIPLINE)

VDOT (Division) or Co. Name (Location), Virginia (TECHNICAL DISCIPLINE)

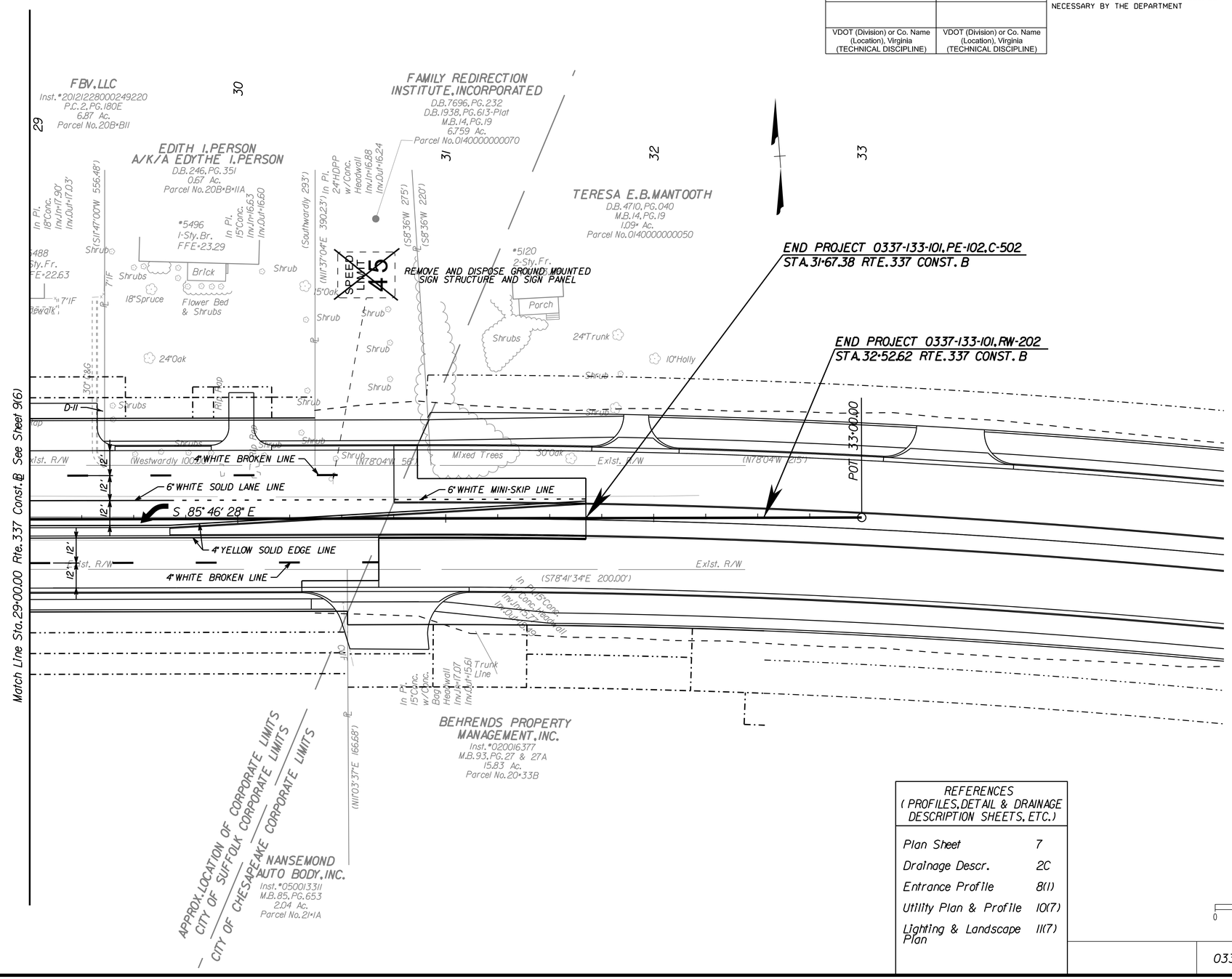

REFERENCES (PROFILES, DETAIL & DRAINAGE DESCRIPTION SHEETS, ETC.)	
Plan Sheet	7
Drainage Descr.	2C
Entrance Profile	8(1)
Utility Plan & Profile	10(7)
Lighting & Landscape Plan	11(7)

SCALE 0 25' 50'

PROJECT	SHEET NO.
0337-133-101	9(7)

PROJECT MANAGER Sherry Earley, P.E., City of Suffolk (757) 514-7703
SURVEYED BY PMI/INC. (757) 368-0945
DESIGN SUPERVISED BY Ian Johnson, P.E., Clark Nexsen (757) 455-5800
DESIGNED BY Clark Nexsen (757) 455-5800

UTILITY NOTES

FINAL PLANS

REVISED	STATE	STATE ROUTE	STATE PROJECT	SHEET NO
	VA.	337	0337-133-101, PE-102 RW-202, C-502	10(1)

DESIGN FEATURES RELATING TO CONSTRUCTION OR TO REGULATION AND CONTROL OF TRAFFIC MAY BE SUBJECT TO CHANGE AS DEEMED NECESSARY BY THE DEPARTMENT

VDOT (Division) or Co. Name (Location), Virginia (TECHNICAL DISCIPLINE)

VDOT (Division) or Co. Name (Location), Virginia (TECHNICAL DISCIPLINE)

OWNER: CITY OF SUFFOLK
POC: SHERRY EARLEY, PE
442 W. WASHINGTON ST.
P.O. BOX 1858
SUFFOLK, VA 23439
(757) 514-7703

ENGINEER: CLARK NEXSEN
POC: IAN JOHNSTON, PE
4525 MAIN ST., STE. 1400
VIRGINIA BEACH, VA 23462
(757) 455-5800

GENERAL NOTES

1. LOCATION, DEPTHS AND SIZES OF EXISTING UTILITIES SHOWN ON THE PLANS ARE NOT GUARANTEED. THE CONTRACTOR SHALL FIELD VERIFY WITH TEST HOLES THE LOCATION, ELEVATION, TYPE, ROUNDNESS AND SIZE OF ALL EXISTING UNDERGROUND UTILITIES AND POINTS OF CONNECTION PRIOR TO EXCAVATION, ORDERING OF MATERIALS AND INSTALLATION FOR THIS PROJECT.

2. THE CONTRACTOR SHALL NOTE THAT THE UTILITY PLAN SHEETS ARE FOR CITY OF PORTSMOUTH/ CITY OF SUFFOLK WATER/SEWER RELOCATION/ADJUSTMENT WORK ONLY. THE CONTRACTOR SHALL REFER TO THE ROADWAY PLANS FOR ROADWAY AND DRAINAGE DESIGN.

3. NO VALVES OR OTHER CONTROL DEVICE ON THE EXISTING WATER AND SEWER SYSTEM SHALL BE OPERATED FOR ANY PURPOSE BY THE CONTRACTOR. CITY EMPLOYEES WILL OPERATE ALL EXISTING VALVES. THE CONTRACTOR SHALL NOTIFY THE CITY OF SUFFOLK PUBLIC UTILITIES/CONSTRUCTION INSPECTION DIVISION (757-514-7078, CONTACT: MR. GENE WEAVER) OR CITY OF PORTSMOUTH PUBLIC UTILITIES (757-393-8561, CONTACT: MR. JAMES MCKECHNIE) 48 HOURS PRIOR TO THE NEED FOR VALVE OPERATIONS.

4. THE CONTRACTOR SHALL NOTIFY CITY OF SUFFOLK PUBIC UTILITIES (757-514-7078) OR THE CITY OF PORTSMOUTH PUBLIC UTILITIES (757-393-8561) IMMEDIATELY IF ANY EXISTING WATER OR SEWER FACILITY IS DISTURBED. THE CITY OF PORTSMOUTH OWNS THE EXISTING 20" WATER MAIN AND THE CITY OF SUFFOLK OWNS ALL OTHER EXISTING WATER AND SEWER FACILITIES.

5. THE CONTRACTOR SHALL NOT PERFORM ANY GRADING OPERATIONS OVER EXISTING WATER AND SEWER FACILITIES WITHIN THE PROJECT WHICH WOULD IN ANY WAY JEOPARDIZE SERVICES UNTIL THE PROPOSED WATER AND SEWER FACILITIES ARE INSTALLED AND PLACED INTO OPERATION AND EXISTING WATER AND SEWER FACILITIES ARE REMOVED. ANY DEVIATION MUST BE APPROVED BY THE OWNER.

6. EXISTING MAINS AND WATER SERVICES SHALL REMAIN IN SERVICE UNTIL NEW MAINS AND SERVICES ARE PLACED IN SERVICE AND APPROVED BY THE OWNER. PROPOSED FIRE HYDRANTS SHALL REMAIN COVERED BY MEANS OF SECURELY ATTACHED BURLAP BAGS UNTIL TESTED AND PLACED IN SERVICE.

7. THE CONTRACTOR SHALL NOT INSTALL WATER MAIN JOINTS BENEATH PROPOSED OR EXISTING UTILITIES OR PROPOSED VDOT STORM DRAINAGE WHEN CROSSING UNDER THESE STRUCTURES. A MINIMUM CLEARANCE OF 8 TO 10 FEET BEYOND THE OUTSIDE OF THE FOREIGN PIPE OR UTILITY SHALL BE REQUIRED WHEN PLACING JOINTS.

8. INSTALL VALVES WITH OPERATOR STEMS IN THE VERTICAL PLANE THROUGH THE PIPE AXIS AND PERPENDICULAR TO THE PIPE AXIS. LOCATE VALVES AS SHOWN ON DRAWINGS. NO VALVES SHALL BE LOCATED UNDER A CONCRETE GUTTER.

9. WATER MAIN SHALL BE LAID WITH BELL ENDS FACING THE DIRECTION OF LAYING. WHERE GRADE IS 10 PERCENT OR GREATER, PIPE SHALL BE LAID UPHILL WITH BELL ENDS UPGRADE.

10. CONTRACTOR TO FIELD VERIFY LOCATIONS AND DEPTH OF ALL OPERATIONAL SANITARY SERVICE LATERALS PRIOR TO CONSTRUCTION OR ADJUSTMENT OF THE UTILITY SYSTEMS. CONTRACTOR TO SCHEDULE SANITARY SEWER LATERAL CONNECTIONS WITH THE PROPERTY OWNER, USER, AND CITY OF SUFFOLK. THE CONTRACTOR SHALL NOTIFY THE CITY OF SUFFOLK DEPARTMENT OF UTILITIES AT LEAST 48-HOURS IN ADVANCE OF A SERVICE CHANGE-OVER.

11. ALL EXISTING VALVE BOXES, SANITARY SEWER MANHOLES AND CLEAN OUTS ON ACTIVE SYSTEMS SHALL BE ADJUSTED TO FINISH GRADE AS REQUIRED, REGARDLESS IF THEY ARE SHOWN ON THE PLANS.

12. THE CONTRACTOR, WITH HIS ASSOCIATED MATERIALS SUPPLIERS, SHALL PROVIDE CERTIFICATION ACCEPTABLE TO THE OWNER, THAT ALL PIPE MATERIALS SUPPLIED ON THE PROJECT MEET OR EXCEED THE SPECIFICATIONS.

13. ALL THRUST PROTECTION INSTALLED UNDER THIS CONTRACT SHALL BE PLACED BEFORE BACKFILLING OF THE TRENCH AND INSPECTED BY THE OWNER. TEMPORARY BUTTRESSING FOR TESTING SHALL BE PROVIDED BY THE CONTRACTOR. INSTALLATION OF APPROVED RETAINER GLANDS, TIE RODS, AND OTHER THRUST RESTRAINTS SHALL BE IN ACCORDANCE WITH THE MANUFACTURER'S INSTRUCTIONS.

14. ALL IN-LINE VALVES OF ABANDONED WATER MAINS, SHALL BE ABANDONED BY HAVING CITY OF SUFFOLK FORCES CLOSE THE VALVE. THE CONTRACTOR SHALL THEN REMOVE THE OPERATING NUT AND CASTINGS, BACKFILL WITH SELECT MATERIAL AND PERFORM THE NECESSARY RESTORATION.

15. CONTRACTOR SHALL RESTRAIN EXISTING PIPE AT CONNECTIONS TO PROPOSED PIPE AND AT PLUGS IN ACCORDANCE WITH THE RESTRAINED LENGTH OF PIPE INDICATED ON THE DRAWINGS.BACKFILL REQUIREMENTS AT CONNECTION POINTS SHALL INCLUDE THE PLACEMENT OF CRUSHED STONE IN THE PIPE TRENCH BETWEEN THE TRENCH WALL AND THE PIPE AT A DEPTH OF NO LESS THAN THE SPRING LINE OF THE PIPE BEFORE THE PIPE IS PRESSURIZED. AT ALL OTHER LOCATIONS, ALL REQUIRED RESTRAINED PIPE LENGTHS SHALL BE BACKFILLED AND COMPACTED AS SPECIFIED PRIOR TO PRESSURIZING THE PIPE.

16. CONTRACTOR SHALL RECORD AND PROVIDE TO THE ENGINEER AND OWNER ACTUAL GROUND TOP OF PIPE ELEVATIONS, ACTUAL STATIONS AND OFFSETS, AT ALL FITTINGS, CONNECTION POINTS AND HORIZONTAL DEVIATIONS GREATER THAN TWO (2) FEET FROM THE PLANS. STATION REFERENCES SHALL BE TIED TO CONSTRUCTION CENTER LINE FOR THE ROADWAY IMPROVEMENTS. THIS INFORMATION SHALL BE PROVIDED TO THE ENGINEER AND OWNER WITHIN FIVE (5) DAYS OF COMPLETION OF THE UTILITY ADJUSTMENTS.

17. THE CONTRACTOR SHALL COMPLY WITH "MISS UTILITY" REQUIREMENTS PRIOR TO PERFORMING ANY EXCAVATION (DIAL 811).

18. SYSTEM SHUTDOWN OPERATION:

A. THE CONTRACTOR SHALL SUBMIT A SEQUENCE OF UTILITY CONSTRUCTION TO THE CITY OF SUFFOLK AND CITY OF PORTSMOUTH PUBLIC UTILITIES DEPARTMENT A MINIMUM OF 14 DAYS PRIOR TO PRECONSTRUCTION CONFERENCE. SEQUENCE OF UTILITY CONSTRUCTION SHALL CONSIST OF A PRELIMINARY LIST OF DATES FOR UTILITY TIE-INS, CONNECTIONS AND SHUTDOWNS AND A LIST OF EQUIPMENT AND MATERIALS NEEDED TO PERFORM THE WORK. THE CONTRACTOR SHALL ALSO PROVIDE AT THIS TIME THE ANTICIPATED SHUTDOWN TIME REQUIRED AS WELL AS ANTICIPATED TIME OF DAY SCHEDULES FOR THE TIE-INS, CONNECTIONS AND SHUTDOWNS.

B. CONTRACTOR SHALL GIVE A TWO (2) WEEK NOTICE IN WRITING TO SUFFOLK PUBLIC UTILITIES AND PORTSMOUTH PUBLIC UTILITIES FOR EACH CONNECTION AND/OR ADJUSTMENT TO THE EXISTING FACILITIES OWNED BY SUFFOLK OR PORTSMOUTH. THE CONTRACTOR SHALL ALSO NOTIFY THE CITY OF CHESAPEAKE TWO (2) WEEKS PRIOR TO THE SHUTDOWN OF THE PORTSMOUTH 20" WATER MAIN (CONTACT: MS. BETTIE CAHOON, 757-382-3411 OR 757-641-0321) NO GUARANTEE CAN BE MADE THAT A FULL AND COMPLETE SHUTOFF OF PORTSMOUTH OR SUFFOLK FACILITIES CAN BE MADE TO FACILITATE CONNECTIONS TO EXISTING MAINS. THE CONTRACTOR SHALL HAVE ADEQUATE PUMPING CAPABILITIES ON SITE TO HANDLE ANY EXCESS WATER. THE WRITTEN NOTIFICATION SHALL ALSO INCLUDE A SKETCH THAT INCLUDES EXISTING PIPE ELEVATIONS AND THE LOCATION OF JOINTS WITH RESPECT TO THE PROPOSED WATER MAIN TIE-IN LOCATIONS.

C. WORK ON THE 20" PORTSMOUTH WATER MAIN CAN BE STOPPED UP TO THE POINT AT WHICH THE CONTRACTOR IS READY TO CUT THE 20" WATER MAIN SHOULD THE CITY OF PORTSMOUTH OR CITY OF CHESAPEAKE HAVE OPERATIONS PROBLEMS (I.E. WATER MAIN FAILURES, FIRE DEMAND, ETC.) WHICH WOULD PROHIBIT EXECUTION OF THEIR PLANNED CONTINGENCIES.

D. THE EXISTING CITY OF SUFFOLK AND CITY OF PORTSMOUTH FACILITIES.WITH THE EXCEPTION OF THE GRAVITY SEWER, WHICH SHALL REMAIN ACTIVE AT ALL TIMES, SHALL BE DEACTIVATED FOR A MAXIMUM PERIOD OF SIX (6) HOURS (NIGHTTIME SHUTDOWN) FOR EACH SCHEDULED SHUTDOWN. THE CONTRACTOR SHALL MAKE AS MANY CONNECTIONS AS PRACTICAL DURING EACH SHUTDOWN PERIOD.

E. PRIOR TO CUTTING ANY WATER/ SEWER MAIN, THE CONTRACTOR SHALL HAVE ALL FITTINGS, VALVES, PIPE AT THE SITE AND SHALL VERIFY IN THE PRESENCE OF THE OWNER, THE CITIES OF SUFFOLK AND PORTSMOUTH THROUGH FIELD MEASUREMENTS, THAT ALL PIPING, FITTINGS AND VALVES WILL ALIGN AND FIT PROPERLY WITH THE EXISTING FACILITIES. NO WATER CAN BE IN THE TRENCH WITHIN TWO (2) FEET OF THE INVERT OF THE EXISTING MAIN. PRIMARY AND BACKUP PUMPING SHALL BE ON SITE TO REMOVE STANDING WATER IN THE TRENCH. EXISTING MAINS SHALL BE CAPPED AND RESTRAINED AT THE CONNECTION POINTS TO PREVENT DEBRIS FROM ENTERING THE MAINS DURING INSTALLATION OF THE PROPOSED PIPE. FURTHERMORE, ALL NEWLY CONSTRUCTED PIPE AND APPURTENANCES SHALL HAVE PASSED ALL NECESSARY TESTS IN THE PRESENCE OF AN INSPECTOR FROM THE CITY OF SUFFOLK OR CITY OF PORTSMOUTH AND SHALL BE CAPABLE OF BEING ACTIVATED ONCE THE ADJUSTMENT WORK HAS BEEN COMPLETED. CONNECTION TO EXISTING LINES SHALL BE MADE ONLY AFTER THE LINE IS INSTALLED, TESTED, AND APPROVED BY THE OWNER.

19. ACCESS TO ALL IN-SERVICE PUBLIC AND PRIVATE FIRE HYDRANTS WITHIN THE PROJECT LIMITS SHALL BE MAINTAINED AT ALL TIMES. A MINIMUM CLEAR SPACE OF A 10 FOOT RADIUS AROUND THE HYDRANTS SHALL BE KEPT CLEAR OF ALL SOIL, STONE, MATERIALS, EQUIPMENT, AND OTHER OBSTRUCTIONS. THE CONTRACTOR SHALL NOTIFY THE CITY OF SUFFOLK 48 HOURS PRIOR TO WORK ON EXISTING FIRE HYDRANTS WITHIN THE PROJECT LIMITS. THE CONTRACTOR SHALL SCHEDULE HYDRANT INSTALLATIONS SO THAT NO TWO HYDRANTS IN LINE WILL BE OUT OF SERVICE AT THE SAME TIME. THE CONTRACTOR SHALL ALSO SEQUENCE EACH HYDRANT INSTALLATION FOR MINIMAL AMOUNT OF DOWNTIME. ALL POSSIBLE TRENCHING AND ASSEMBLY REQUIRED FOR THE NEW HYDRANT SHALL BE DONE PRIOR TO TAKING THE OLD HYDRANT OFF LINE. THE CONTRACTOR SHALL COORDINATE WITH THE CITY OF SUFFOLK PUBLIC UTILITIES FOR TESTING AND PAINTING OF NEW HYDRANTS. FIRE HYDRANT PAINTING SHALL BE CONSIDERED INCIDENTAL TO THE COST OF INSTALLATION AND SHALL BE IN ACCORDANCE WITH THE MATERIAL NOTE FOR FIRE HYDRANTS. ABANDONED FIRE HYDRANTS SHALL BE SALVAGED BY THE CITY OF SUFFOLK, AFTER REMOVAL BY THE CONTRACTOR.

20. FLUSHING AND DISINFECTION OF WATER MAINS: THE CONTRACTOR SHALL PROVIDE AT LEAST 48 HOURS NOTICE PRIOR TO SCHEDULED TESTING, FLUSHING AND INSPECTION. ONLY PROPERLY FUNCTIONING AND CLEAN EQUIPMENT SHALL BE USED FOR DISINFECTING WATER MAINS.

DISINFECTION SHALL BE IN ACCORDANCE WITH AWWA C651, LATEST REVISION AND VIRGINIA DEPARTMENT OF HEALTH WATERWORKS REGULATIONS, NO. 12 VAC 5-590-800-DISINFECTION. DISINFECTION PROCEDURE SHALL BE CARRIED OUT AFTER COMPLETION OF CONSTRUCTION AND IMMEDIATELY BEFORE THE MAINS ARE PLACED INTO SERVICE. DURING CONSTRUCTION, PRECAUTIONS SHALL BE TAKEN TO PROTECT PIPE INTERIORS, FITTINGS, AND VALVES AGAINST CONTAMINATION.

CLEANING AND SWABBING OF THE INTERIOR OF THE PIPE MAY BE REQUIRED IF CONTAMINATION CANNOT BE REMOVED BY ORDINARY FLUSHING AND DISINFECTION PROCEDURES. THE CLEANING AND SWABBING SHALL BE PERFORMED WITH A 5% HYPOCHLORITE DISINFECTING SOLUTION, OR OTHER DISINFECTING AGENT APPROVED BY THE INSPECTOR. THE CONTRACTOR SHALL BE RESPONSIBLE FOR TREATING THE DISCHARGE DURING DISINFECTION, TESTING, AND FLUSHING ACTIVITIES.

WATER MAINS SHALL BE FLUSHED EVERY 2,000 FEET UNLESS THE INSPECTOR GIVES THE CONTRACTOR WRITTEN PERMISSION FOR FLUSHING LONGER LENGTHS OF PIPELINE DUE TO DRAINAGE CONSIDERATIONS. NO MORE THAN 4,000 FEET OF PIPELINE SHALL BE FLUSHED AT ANY ONE TIME, UNDER ANY CIRCUMSTANCES. NOTE: (1) OPEN FLUSHING IS NOT ALLOWED ON THE PROPOSED PORTSMOUTH 20" WATER MAIN. THE PROPOSED PORTSMOUTH 20" WATER MAIN SHALL BE DISINFECTED BY SWABBING AND INSTALLED CLEAN. (2) THE CONTRACTOR SHALL INSTALL NEW WATER SERVICE LINES ON THE NEW 12" MAIN PRIOR TO FLUSHING.

ALL WATER MAINS SHALL BE FLUSHED WITH POTABLE WATER PRIOR TO DISINFECTION. THE FLUSHING VELOCITY SHALL NOT BE LESS THAN 3.0 FPS. NO SITE FOR FLUSHING SHALL BE USED UNLESS ADEQUATE AND SATISFACTORY DRAINAGE IS PRESENT, AVAILABLE, AND OPERATIONAL. IT SHALL BE NOTED THAT UNDER NO CIRCUMSTANCES WILL PRELIMINARY FLUSHING BE CONSIDERED A SUBSTITUTE FOR PREVENTATIVE MEASURES TAKEN BEFORE AND DURING WATER MAIN CONSTRUCTION TO MINIMIZE CONTAMINATION.

ACCEPTABLE DISINFECTING SOLUTIONS SHALL INCLUDE CHLORINE IN LIQUID FORM, IN CALCIUM HYPOCHLORITE GRANULES OR IN SODIUM HYPOCHLORITE SOLUTIONS. ALL HYPOCHLORITE SHALL CONFORM TO AWWA B300, LATEST REVISION. THE CHLORINE CONCENTRATION IN THE NEWLY INSTALLED MAIN SHALL BE INTRODUCED AT A MINIMUM 50 MG/L AVAILABLE CHLORINE. THE CHLORINATED WATER SHALL BE RETAINED IN THE MAIN FOR AT LEAST 24 HOURS DURING WHICH TIME ALL VALVES AND APPURTENANCES IN THE SECTION TREATED SHALL BE OPERATED IN ORDER TO DISINFECT THE APPURTENANCES. AFTER THE RETENTION PERIOD, ALL OF THE CHLORINATING AGENTS SHALL BE THOROUGHLY FLUSHED FROM THE SYSTEM UNTIL THE REPLACEMENT WATER SHALL, UPON TESTING, BE PROVEN BOTH BACTERIOLOGICALLY AND CHEMICALLY SATISFACTORY TO THE INSPECTOR, THE STATE BOARD OF HEALTH, AND OTHER COGNIZANT PUBLIC HEALTH AGENCIES. THE FLUSHING SHALL BE CONDUCTED IN THE PRESENCE OF AND ONLY WITH THE APPROVAL OF THE OWNER.

AFTER FINAL FLUSHING AND BEFORE THE WATER MAIN IS PLACED IN SERVICE, THE CONTRACTOR SHALL COLLECT SAMPLES AND HAVE THE SAMPLES TESTED FOR BACTERIOLOGICAL QUALITY BY A STATE HEALTH DEPARTMENT APPROVED LABORATORY. SAMPLES TAKEN FROM CITY OF SUFFOLK FACILITIES SHALL BE TAKEN TO THE CITY OF SUFFOLK LABORATORY FOR TESTING PURPOSES. BACTERIOLOGICAL TESTING SHALL BE IN ACCORDANCE WITH VIRGINIA DEPARTMENT OF HEALTH'S WATERWORKS REGULATIONS, NO. 12 VAC 5-590-800-DISINFECTION. AT LEAST TWO CONSECUTIVE SATISFACTORY BACTERIOLOGICAL SAMPLES SHALL BE TAKEN FROM SECTIONS NOT EXCEEDING 2,000 FEET IN LENGTH AT 24-HOUR INTERVALS. CHLORINE RESIDUALS MEASUREMENTS SHALL BE TAKEN AND RECORDED AT THE TIME EACH SAMPLE IS COLLECTED.

IF THE INITIAL DISINFECTION PROCEDURE PRODUCES POSITIVE RESULTS FOR COLIFORM, THE MAIN SHALL BE RE-FLUSHED AND THE SAMPLING PROCEDURE REPEATED. IF THESE SAMPLES ARE POSITIVE FOR COLIFORM, THEN THE MAIN SHALL BE RE-CHLORINATED AND THE SAMPLING PROCEDURE REPEATED.

THE DISINFECTION AND TESTING PROCEDURE SHALL BE CARRIED OUT BY THE CONTRACTOR UNDER THE SUPERVISION OF THE INSPECTOR. WATER MAINS SHALL BE PLACED IN SERVICE ONLY AFTER FINAL APPROVAL HAS BEEN ISSUED BY THE OWNER CONTINGENT UPON TEST RESULTS. BEFORE THE INSPECTOR SHALL WITNESS THE STERILIZATION, HE SHALL ENSURE THAT THE CONTRACTOR HAS TAKEN ADEQUATE MEASURES TO PROTECT THE PUBLIC FROM THE HAZARDS POSTED BY THE ESCAPE OF CHLORINE IF LIQUID CHLORINE OR CHLORINE GAS IS USED. AT A MINIMUM, THE CONTRACTOR SHALL HAVE ON HAND ONE (1) CHLORINE INSTITUTE APPROVED MASK AND REPAIR KIT FOR THE CHLORINE GAS CYLINDER BEING USED.

PROJECT	SHEET NO.
0337-133-101	10(1)

PROJECT MANAGER Sherry Earley, P.E., City of Suffolk (757) 514-7703
SURVEYED BY EMJINC (757) 368-0945
DESIGN SUPERVISED BY Ina Johnson, P.E., Clark Nexsen (757) 455-5800
DESIGN BY Clark Nexsen (757) 455-5800

UTILITY NOTES

GENERAL NOTES (CONTINUED)

21. TESTING OF WATER AND SEWER MAINS

A. THE CONTRACTOR SHALL NOTIFY THE OWNER 48 HOURS PRIOR TO THE PRESSURE TEST DATE. WATER FOR THE TEST MAY BE OBTAINED FROM THE EXISTING SYSTEM, WITH PRIOR APPROVAL FROM THE OWNER. SUFFOLK FACILITIES SHALL BE TESTED AFTER THE CORPORATION STOP HAS BEEN INSTALLED.

B. NEW WATER MAINS SHALL BE PRESSURE TESTED IN ACCORDANCE WITH AWWA C600, LATEST REVISION EXCEPT AS MODIFIED HEREIN. WATER MAINS SHALL BE FILLED WITH CLEAN WATER AND SUBJECTED TO A HYDROSTATIC PRESSURE TEST OF 1.5 TIMES THE EXPECTED WORKING PRESSURE OR 150 PSI, WHICHEVER IS GREATER, MEASURED AT THE HIGHEST POINT ALONG THE TEST SECTION. THE PRESSURE TEST SHALL BE OF AT LEAST A TWO HOUR DURATION AND ANY DAMAGED OR DEFECTIVE PIPE, FITTINGS, VALVES, OR HYDRANTS THAT ARE DISCOVERED FOLLOWING THE PRESSURE TEST SHALL BE REPLACED BY THE CONTRACTOR. THE CONTRACTOR SHALL FURNISH ALL NECESSARY EQUIPMENT, MATERIALS, TEST PLUGS, AND LABOR FOR MAKING THE TESTS AS SPECIFIED. BEFORE APPLYING THE SPECIFIED TEST PRESSURE, AIR SHALL BE EXPELLED COMPLETELY FROM THE PIPE, VALVES, AND HYDRANTS. HYDRANTS SHALL BE TESTED WITH THE MAIN LINE.

C. THE CONTRACTOR SHALL TEST THE LINE PRIOR TO CONTACTING THE OWNER FOR THE FORMAL PRESSURE TEST.

D. TESTING SHALL BE PERFORMED ON EACH SECTION OF PIPE BETWEEN MAIN LINE VALVES.

E. WATER FOR PRESSURE TEST SHALL BE OBTAINED THROUGH A FULLY VALVED MANIFOLD WITH AN APPROVED BACKFLOW PREVENTER.

F. THE CONTRACTOR SHALL FURNISH ALL PUMPS, FITTINGS, AND GAUGES AS NECESSARY TO FILL THE LINE WITH POTABLE WATER, DISPEL AIR FROM THE SYSTEM, AND PRESSURIZE THE PIPELINE FOR THE TESTS.

G. THE OWNER RESERVES THE RIGHT TO TEST GAUGES TO DETERMINE THEIR ACCURACY.

H. THE CONTRACTOR SHALL COORDINATE ARRANGEMENTS FOR WATER TO BE USED FOR THE PRESSURE TESTING WITH THE OWNER.

I. THE TEST PRESSURE SHALL NOT VARY BY MORE THAN +/- 5 PSI FOR THE DURATION OF THE TEST.

J. THE CONTRACTOR SHALL PROVIDE ALL NECESSARY TEMPORARY RESTRAINT AND SUPPORT DURING TESTING AT NO ADDITIONAL COST TO THE PROJECT.

K. THE LEAKAGE TEST SHALL BE CONDUCTED CONCURRENTLY WITH THE PRESSURE TEST. NO PIPE INSTALLATIONS WILL BE ACCEPTED IF ANY LEAKAGE SHOWS AT ANY JOINT AND THE CONDITION MUST BE CORRECTED AND ANOTHER TEST MADE.

22. CONTRACTOR SHALL FURNISH EIGHT COPIES OF ALL SHOP DRAWINGS TO THE ENGINEER PRIOR TO CONSTRUCTION AND/OR INSTALLATION OF CITY OF SUFFOLK/ PORTSMOUTH FACILITIES AND RELATED ITEMS. ANY ITEMS INSTALLED PRIOR TO APPROVAL OF SHOP DRAWINGS ARE DONE AT THE CONTRACTOR'S RISK AND MAY BE SUBJECT TO REMOVAL AND CORRECT INSTALLATION AT THE CONTRACTOR'S EXPENSE.

23. SUBMITTALS:

A. SUBMIT SHOP DRAWINGS (8 COMPLETE SETS) OF THE FOLLOWING, IN ADDITION TO SUBMITTALS REQUIRED BY OTHER SECTIONS OF THE CONTRACT DOCUMENTS:

PIPE	METHOD OF JOINT RESTRAINT
SOLID SLEEVES	TRANSITION COUPLINGS
VALVES	METHOD OF CONNECTION TO EXIST. MAINS
VALVE BOXES	SEQUENCE OF CONSTRUCTION
FITTINGS	DISSIMILAR MATERIAL PIPE JOINTS
GASKETS	MANHOLE CONNECTION
RESTRAINED JOINTS	MANHOLES
RETAINER GLANDS	MANHOLE FRAMES & COVER
FIRE HYDRANTS	MANHOLE STEPS
WATER METERS	
METER BOXES	

24. EACH UTILITY PLAN SHEET HAS A BASE NUMBER WITH A SUFFIX NUMBER IN PARENTHESES (EXAMPLE 10(6), 10(6A), ETC.). REFERENCES WITHIN UTILITY ADJUSTMENT PLANS REFER TO THE SUFFIX NUMBER ONLY.

25. ALL ITEMS OF MATERIAL, LABOR, SUPPLIES OR EQUIPMENT THAT ARE NOT SPECIFICALLY LISTED AS A PAY ITEM, BUT WHICH ARE REQUIRED TO COMPLETE THE WORK AS SHOWN ON THE DRAWINGS AND AS DESCRIBED IN THE SPECIFICATIONS, ARE CONSIDERED SUBSIDIARY OBLIGATIONS OF THE CONTRACTOR. NO SEPARATE MEASUREMENT OR PAYMENT WILL BE MADE FOR THEM.

26. THE CONTRACTOR SHALL BE RESPONSIBLE FOR ALL SEWAGE OVERFLOWS OR SPILLAGE DURING SANITARY SEWER SYSTEM SHUTDOWN OR CONNECTIONS. ONCE GRAVITY SANITARY SEWER FACILITIES HAVE BEEN SHUTDOWN OR PUMP STATIONS PUMPED DOWN, THE CONTRACTOR SHALL PROVIDE STANDBY SEWAGE PUMPING AND HAULING OR BY-PASS PUMPING TECHNIQUES FOR THE DISPOSAL OF ALL OVERFLOWS WHICH MAY OCCUR IN THE SHUTDOWN OF THE SANITARY SEWER SYSTEM FACILITIES. THE METHOD FOR MAINTAINING SEWAGE CONVEYANCE SHALL BE APPROVED BY THE CITY OF SUFFOLK PUBLIC UTILITIES PRIOR TO SYSTEM SHUTDOWN.

27. CONTRACTOR TO PROTECT AND SUPPORT, AS NECESSARY, ALL EXISTING CITY OF PORTSMOUTH WATERLINES EITHER CROSSING OR IN CLOSE PROXIMITY TO PROPOSED CONSTRUCTION ACTIVITY. CONTRACTOR SHALL SUBMIT UTILITY SUPPORT PLAN FOR APPROVAL BY ENGINEER.

MATERIAL NOTES

NOTE: MATERIAL SPECIFICATIONS FOR WATER AND SANITARY SEWER ITEMS ARE PROVIDED IN THIS SECTION. ITEMS NOT INDICATED HERE SHALL BE IN ACCORDANCE WITH THE VDOT ROAD AND BRIDGE SPECIFICATIONS. MEASUREMENT AND PAYMENT FOR WATER AND SANITARY SEWER BID ITEMS SHALL BE IN ACCORDANCE WITH THE VDOT ROAD AND BRIDGE SPECIFICATIONS.

1. DUCTILE IRON WATER MAIN OR OFFSETS OF EXISTING MAINS SHALL CONFORM TO AWWA C150 AND C151. PIPE SHALL BE PRESSURE CLASS 350 FOR PIPE DIAMETERS 16" OR LESS AND SPECIAL THICKNESS CLASS 51 FOR PIPE DIAMETERS GREATER THAN 16" IN ACCORDANCE WITH AWWA C150 TABLE 50.15. FOR BURIAL DEPTHS EXCEEDING THOSE ALLOWED BY THE CLASS, PIPE AND FITTINGS OF SUFFICIENT WALL THICKNESS SHALL BE PROVIDED. PIPE OVER 12" INSIDE DIAMETER SHALL HAVE ONE PIECE OF GAUGED PIPE DELIVERED FOR EACH FITTING. GAUGED PIECES SHALL BE MARKED AS SUCH ON THE PIPE AND SHALL BE ACCOMPANIED BY THE MANUFACTURER'S CERTIFICATION. MANUFACTURER'S CERTIFICATION OF INSPECTION AND TESTING SHALL ACCOMPANY EACH DELIVERY. DUCTILE IRON FITTINGS SHALL CONFORM WITH AWWA C110 OR AWWA C153. COMPACT FITTINGS ARE REQUIRED, AND SHALL HAVE A MINIMUM ACCEPTABLE PRESSURE RATING SHALL OF 350 PSI. ALL FITTINGS SHALL BE MECHANICAL JOINT UNLESS NOTED OTHERWISE. DUCTILE IRON WATER MAIN PIPE SHALL BE AS MANUFACTURED BY:

1. AMERICAN CAST IRON PIPE COMPANY
2. U.S. PIPE AND FOUNDRY COMPANY
3. GRIFFIN PIPE PRODUCTS

A. JOINTS SHALL CONFORM TO AWWA C111 OR C115 AS APPLICABLE. THE MINIMUM ACCEPTABLE PRESSURE RATING FOR ALL JOINTS IS 250 PSI. ALL FLANGES AND GLANDS FOR PIPES SHALL BE MADE OF DUCTILE IRON. UNLESS NOTED OTHERWISE, USE PUSH-ON OR MECHANICAL JOINTS CONFORMING WITH ALL APPLICABLE PROVISIONS OF AWWA C111, OR RESTRAINED JOINT AS SPECIFIED BELOW. WHERE FLANGED JOINT PIPE OR FLANGED FITTINGS ARE REQUIRED FOR CONNECTIONS, VERIFY AND COORDINATE BOLT HOLE DRILLING WITH MANUFACTURER.

MECHANICAL JOINT BOLTS SHALL BE U.S. STANDARD SIZE, HIGH STRENGTH, LOW ALLOY (HSLA) STEEL WITH HEXAGONAL NUTS.

B. DEFLECTION: WHEN IT IS NECESSARY TO DEFLECT PIPELINES TO AVOID OBSTRUCTIONS, THE AMOUNT OF DEFLECTION SHALL NOT EXCEED 50% OF THAT RECOMMENDED BY THE PIPE MANUFACTURER. WHERE NECESSARY TO MAINTAIN THE REQUIRED LINE, SHORT SECTIONS OF PIPE OR FITTINGS SHALL BE PROVIDED. MECHANICAL JOINTS WITH METAL TIE RODS WILL BE PROHIBITED IN AREAS WHERE PIPE IS DEFLECTED.

C. EXTERIOR COATING OF ALL DUCTILE IRON PIPE, JOINTS, AND FITTINGS SHALL BE PROVIDED AS REQUIRED BY AWWA C110, C111, C115, C151, OR C153 AS APPLICABLE. ALL PIPES, JOINTS, AND FITTINGS SHALL BE EXAMINED AFTER LAYING TO DETERMINE IF THE COATING HAS BEEN DAMAGED DURING INSTALLATION. ANY DAMAGED AREAS AND ALL JOINTS SHALL BE COATED WITH A MINIMUM OF 2 MIL OF AN APPROVED BITUMINOUS COATING.

D. INTERIOR LINING FOR WATER MAINS SHALL BE CEMENT MORTAR LINED IN ACCORDANCE WITH AWWA C104 INCLUDING ASPHALTIC SEAL. PORTSMOUTH FACILITIES SHALL BE DOUBLE-THICKNESS CEMENT MORTAR LINED AND SUFFOLK FACILITIES SHALL BE SINGLE-THICKNESS CEMENT MORTAR LINED.

E. PIPE RESTRAINING LENGTH SHALL BE AS INDICATED ON THE PLANS. RESTRAINED PIPE SHALL MEET THE FOLLOWING CRITERIA:

1. RESTRAINED JOINT PIPE:

ALL RESTRAINED JOINT PIPE AND FITTINGS SHALL BE RESTRAINED AGAINST THRUST BY USING POSITIVE RESTRAINT SYSTEMS. RESTRAINED JOINT PIPE SHALL BE: U.S. PIPE TR-FLEX, AMERICAN CAST IRON PIPE FLEX-RING, OR GRIFFIN PIPE SNAP-LOK.

2. MECHANICAL JOINT PIPE AND SLIP JOINT PIPE WITH RETAINER GLANDS:

RETAINER GLAND SHALL BE U.L. LISTED AS MANUFACTURED BY: EBBA IRON, INC., SERIES 1100 "MEGALUG", FORD METER BOX COMPANY, INC. SERIES 1400 "UNI-FLANGE", SIGMA "ONE-LOK", OR U.S. PIPE AND FOUNDRY "M.J. GRIPPER". U.S. PIPE AND FOUNDRY "FIELD-LOK" GASKETS WILL BE ALLOWED FOR JOINT RESTRAINT ON STRAIGHT RUNS OF PIPE.

F. RESTRAINT OF EXISTING 20" WATER MAIN AT AND NEAR OFFSET CONNECTION POINTS SHALL BE REQUIRED AS INDICATED ON THE PLANS AND SHALL BE IN ACCORDANCE WITH THE FOLLOWING METHOD:

U.L. LISTED RETAINER GLAND AS MANUFACTURED BY EBBA IRON, INC., SERIES 1100HD OR 1100SD AS APPLICABLE. SPLIT RETAINER GLANDS ARE FOR USE ON DUCTILE IRON PIPE ONLY. IF EXISTING PIPE IS ANY OTHER MATERIAL, REMOVE AND REPLACE WITH DUCTILE IRON MECHANICAL JOINT PIPE WITH RETAINER GLANDS IN ACCORDANCE WITH THE LENGTHS INDICATED ON THE PLANS.

G. CONNECTIONS: UNLESS OTHERWISE NOTED, CONNECTIONS TO EXISTING MAINS SHALL BE MADE USING M.J. SOLID SLEEVE FITTINGS. SLEEVES SHALL BE LONG PATTERN, SOLID TYPE MADE OF DUCTILE IRON WITH A MINIMUM PRESSURE RATING OF 250 PSI. SLEEVES SHALL BE MANUFACTURED BY THE DUCTILE IRON PIPE MANUFACTURER. THE CONTRACTOR IS REQUIRED TO VERIFY THE OUTSIDE DIAMETER OF THE EXISTING WATER MAINS AND COORDINATE REQUIRED MODIFICATIONS, IF ANY, TO THE SLEEVE AND GLAND (MACHINING AND OTHERWISE) WITH THE MANUFACTURER, AND INSTALL IN ACCORDANCE WITH THE MANUFACTURER'S RECOMMENDATIONS.

H. BEDDING AND BACKFILL: IN ACCORDANCE WITH THE CITY OF SUFFOLK DETAIL ON SHEET 10(2B) UNLESS OTHERWISE SHOWN ON THE DRAWINGS.

REVISED	STATE	STATE ROUTE	STATE PROJECT	SHEET NO.
	VA.	337	0337-133-101, PE-102 RW-202, C-502	10(1A)

VDOT (Division) or Co. Name (Location), Virginia (TECHNICAL DISCIPLINE)

VDOT (Division) or Co. Name (Location), Virginia (TECHNICAL DISCIPLINE)

DESIGN FEATURES RELATING TO CONSTRUCTION OR TO REGULATION AND CONTROL OF TRAFFIC MAY BE SUBJECT TO CHANGE AS DEEMED NECESSARY BY THE DEPARTMENT

FINAL PLANS

MATERIAL NOTES (CONTINUED)

I. BENDS AND FITTINGS ARE SHOWN ON THE PLANS FOR DESIGN PURPOSES ONLY. IF ADDITIONAL BENDS (LESS THAN 16") ARE REQUIRED, THE PRICE FOR THESE BENDS SHALL BE CONSIDERED INCIDENTAL TO THE ASSOCIATED WATER MAIN PAY ITEM.

J. DUCTILE IRON PIPE FOR WATER MAINS AND SEWER MAINS SHALL BE WRAPPED IN POLYETHYLENE ENCASEMENT. POLYETHYLENE ENCASEMENT SHALL BE CLASS B, SEAMLESS 4 MILS THICK HIGH DENSITY CROSS-LAMINATED FLAT TUBE POLYETHYLENE AND SHALL CONFORM TO ANSI/AWWA C105/A21.5. THE PRICE FOR THE POLYETHYLENE ENCASEMENT SHALL BE CONSIDERED INCIDENTAL TO THE ASSOCIATED WATER MAIN/SEWER MAIN PAY ITEM.

2. CITY OF PORTSMOUTH VALVE BOX AND VALVE BOX SETTING SHALL BE IN ACCORDANCE WITH THE HRPDC DETAILS ON SHEET 10(2). CITY OF SUFFOLK VALVE BOX AND VALVE BOX SETTING SHALL BE IN ACCORDANCE WITH THE CITY OF SUFFOLK DETAIL ON SHEET 10(2A). VALVE BOX CASTINGS SHALL RECEIVE AN ASPHALTIC COATING.

3. GATE VALVES FOR WATER MAINS FROM 4" UP TO AND INCLUDING 12" IN DIAMETER SHALL CONFORM TO AWWA C509 LATEST REVISION. GATE VALVES SHALL BE RESILIENT SEATED, HAVING A RUBBER ENCAPSULATED IRON DISC, RATED FOR 200 PSI WORKING PRESSURE, EQUIPPED WITH 'O' RING SEALS AND MECHANICAL JOINTS, IRON BODY, AND SUITABLE FOR BURIED SERVICE. GATE VALVES SHALL BE VERTICAL, NUT-OPERATED, NON-RISING STEM TYPE. GATE VALVES SHALL BE:

1. AMERICAN FLOW CONTROL
2. KENNEDY VALVE COMPANY
3. MUELLER COMPANY

ALL GATE VALVES SHALL OPEN LEFT (COUNTER CLOCKWISE).

ALL INTERIOR FERROUS SURFACES OF ALL VALVES SHALL BE COATED IN ACCORDANCE WITH ANSI/AWWA C550 USING A COATING APPROVED BY THE VIRGINIA DEPARTMENT OF HEALTH FOR CONTACT WITH POTABLE WATER AND SHALL NOT CONTAIN LEAD, COAL TAR RESINS, LAMPBLACK, CARBON BLACK, OR BITUMINOUS MATERIALS. THE EXTERIOR SURFACES SHALL RECEIVE A FACTORY APPLIED FUSION BONDED EPOXY COATING.

4. FIRE HYDRANTS SHALL BE APPROVED BY THE NATIONAL BOARD OF FIRE UNDERWRITERS, OF THE DRY BARREL TYPE, NON-FLOODING, TRAFFIC MODEL, FROST PROOF, COMPRESSION TYPE CONFORMING TO AWWA C502, LATEST REVISION. THE HYDRANT SHALL HAVE WASTE ORIFICES FOR DRAINING THE HYDRANT WHEN THE VALVE IS CLOSED. THE HYDRANT SHALL BE EQUIPPED WITH A BARREL SAFETY FLANGE AND A VALVE STEM SAFETY COUPLING SO THAT NEITHER THE BARREL NOR THE STEM WILL BREAK IF STRUCK BY A VEHICLE OR OTHER OBJECT. THE HYDRANTS SHALL BE DESIGNED FOR 150 PSI WORKING PRESSURE AND 300 PSI TEST PRESSURE. THE MAIN VALVE SHALL BE REMOVEABLE FROM ABOVE GROUND.

FIRE HYDRANTS SHALL HAVE SIX INCH MECHANICAL JOINT INLET AND MAIN VALVE OPENING OF 4-1/2 INCHES. HYDRANTS SHALL BE EQUIPPED WITH TWO 2-1/2 INCH HOSE CONNECTIONS AND ONE 4-1/2 INCH PUMPER CONNECTION WITH NATIONAL STANDARD THREADS. HOSE NIPPLES SHALL BE BRONZE OR NON-CORROSIVE METAL AND THE NIPPLE CAPS SHALL BE SECURELY CHAINED TO THE BARREL. THE DIRECTION OF OPENING SHALL BE LEFT (COUNTER CLOCKWISE) AND SHALL BE CAST ON THE HEAD OF THE HYDRANT. THE HYDRANT SHALL BE PAINTED WITH ONE COAT OF ZINC CHROMATE PRIMER AND TWO FINISH COATS OF A PAINT, ALUMINUM IN COLOR.

FIRE HYDRANT CONNECTIONS SHALL BE IN ACCORDANCE WITH THE DETAIL ON SHEET 10(2).

A. HYDRANT SHALL BE SET UPON A BED OF NO. 57 STONE NOT LESS THAN 8" THICK AND 18" SQUARE. HYDRANT DRAINS SHALL OPEN FREELY INTO THIS STONE BED (CONCRETE BLOCK NOT REQUIRED).

B. HYDRANTS SHALL BE SET WITH THE BOTTOM OF THE PUMPER CONNECTION 18" ABOVE FINISHED GRADE.

FIRE HYDRANTS SHALL BE:

1. AMERICAN FLOW CONTROL MK-73-1
2. MUELLER SUPER CENTURION 200
3. KENNEDY GUARDIAN K-81-D.

PROJECT	SHEET NO.
0337-133-101	10(1A)

PROJECT MANAGER Sherry Earley, P.E., City of Suffolk (757) 514-7703
SURVEYED BY EMJINC (757) 368-0945
DESIGN SUPERVISED BY Ina Johnson, P.E., Clark Nexsen (757) 455-5800
DESIGN BY Clark Nexsen (757) 455-5800

UTILITY NOTES

FINAL PLANS

REVISED	STATE	STATE ROUTE	STATE PROJECT	SHEET NO.
	VA.	337	0337-133-101, PE-102 RW-202, C-502	10(1B)

DESIGN FEATURES RELATING TO CONSTRUCTION OR TO REGULATION AND CONTROL OF TRAFFIC MAY BE SUBJECT TO CHANGE AS DEEMED NECESSARY BY THE DEPARTMENT

VDOT (Division) or Co. Name (Location), Virginia (TECHNICAL DISCIPLINE)

VDOT (Division) or Co. Name (Location), Virginia (TECHNICAL DISCIPLINE)

MATERIAL NOTES (CONTINUED)

5. 2" AIR RELEASE VALVE AND BOX FOR CITY OF PORTSMOUTH FACILITIES SHALL BE IN ACCORDANCE WITH THE HRPDC DETAIL ON SHEET 10(2).

6. OFFSET EXISTING PIPE SHALL BE IN ACCORDANCE WITH THE DETAIL ON SHEET 10(2B).

7. 2" AIR RELEASE VALVE & BOX FOR CITY OF SUFFOLK FACILITIES SHALL BE IN ACCORDANCE WITH THE CITY OF SUFFOLK DETAIL ON SHEET 10(2A).

8. WATER SERVICE LINES 2" AND SMALLER SHALL BE TYPE "K SOFT" COPPER TUBING, MANUFACTURED IN ACCORDANCE WITH AWWA C800, LATEST REVISION. EXISTING WATER SERVICE LINES TO BE REMOVED SHALL BE TAKEN OUT OF SERVICE BY SHUTTING OFF AND CAPPING THE CORPORATION STOP AT THE WATER MAIN. TAPS SHALL NOT BE MADE WITHIN 12" OF JOINTS.

   CORPORATION STOPS SHALL CONFORM TO AWWA C800, LATEST REVISION, HAVE AWWA TAPER THREAD INLET AND COMPRESSION CONNECTION OUTLET. CORPORATION STOPS SHALL BE AS MANUFACTURED BY MUELLER COMPANY, A.Y. MCDONALD COMPANY, OR FORD METER BOX COMPANY.

   COPPER SETTERS SHALL HAVE CUT OFF VALVES OF SUFFICIENT SIZE WITH COMPRESSION OR FLARED CONNECTIONS. COPPER SETTERS SHALL BE AS MANUFACTURED BY MUELLER COMPANY, A.Y. MCDONALD COMPANY, OR FORD METER BOX COMPANY. A BACKFLOW PREVENTER SHALL BE PROVIDED ON EACH COPPER SETTER.

   WATER METERS SHALL CONFORM TO AWWA C700, LATEST REVISION AND INDICATE WATER CONSUMPTION IN CUBIC FEET. WATER METERS SHALL HAVE STRAIGHT READING DIALS AND SHALL BE COMPLETELY ENCASED, HERMETICALLY SEALED, AND OF A FROST-PROTECTIVE DESIGN. EACH METER SHALL HAVE AN ARROW ON IT TO INDICATE FLOW DIRECTION. WATER METER SHALL BE A 5/8" X 3/4" SENSUS IPERL. ENCODER AND REGISTER SHALL CONFORM TO AWWA C707, LATEST REVISION.

   WATER METER BOXES SHALL BE IN ACCORDANCE WITH THE DETAIL ON SHEET 10(2).

   A. WATER METER BOXES SHALL HAVE A PRE-CUT HOLE (1-3/4" DIAMETER) FOR THE TOUCH READ PIT LID METER.

   B. THE TOP OF THE METER BOX SHALL EXTEND 1/2" ABOVE FINISHED GRADE.

9. PVC PIPE FOR GRAVITY SANITARY SEWER SHALL BE MANUFACTURED IN ACCORDANCE WITH ASTM D3034 AND SHALL MEET THE REQUIREMENTS FOR SDR26. JOINTS SHALL CONSIST OF AN INTEGRAL WALL SECTION WITH A SOLID CROSS SECTION RUBBER GASKET CONFORMING TO ASTM F477. MINIMUM "PIPE STIFFNESS" (F/Y) AT 5 PERCENT DEFLECTION SHALL BE 46 PSI WHEN TESTED IN ACCORDANCE WITH ASTM D-2412. THE MAXIMUM ALLOWABLE DEFLECTION SHALL BE 5 PERCENT AFTER BACKFILL HAS REACHED 95 PERCENT COMPACTION.

   PVC PIPE SHALL BE INSTALLED WITH CONTINUOUS, 10 GAUGE, PLASTIC-COATED, SOLID COPPER TRACER WIRE, ATTACHED EVERY 10 FEET TO THE PIPING SYSTEM. THE WIRE SHALL TERMINATE ABOVE GROUND AT EVERY MANHOLE. THE WIRE SHALL BE OF SUFFICIENT LENGTH TO ALLOW THE WIRE TO BE UNCOILED AND EXTENDED ONE FOOT ABOVE THE FINISHED GRADE. TRACER WIRE SHALL BE CONSIDERED COMPLETE AND ACCEPTABLE FOR SERVICE IF THE OWNER CAN TRACE THE WIRE USING LOCATING EQUIPMENT. THE COST FOR TRACER WIRE INSTALLATION SHALL BE CONSIDERED INCIDENTAL TO THE UNIT COST BID FOR PVC GRAVITY SEWER MAIN.

   PVC PIPE SHALL BE INSTALLED WITH SUBSURFACE UTILITY WARNING TAPE. THE WARNING TAPE SHALL BE OF A DURABLE, METALIZED, PLASTIC FILM FOR IDENTIFICATION OF SEWER MAINS. BRIGHT GREEN TAPE IMPRINTED WITH THE LEGEND "CAUTION - SEWER BELOW" SHALL BE USED AS APPROPRIATE. SUBSURFACE UTILITY WARNING TAPE SHALL BE PLACED AT AN ELEVATION NOT LESS THAN 6-INCHES, NOR MORE THAN 12-INCHES BELOW THE PROPOSED FINISHED GRADE, OR DIRECTLY UNDER THE ROADWAY BASE MATERIAL IF THE BASE MATERIAL IS GREATER THAN 12-INCHES. THE COST FOR SUBSURFACE UTILITY WARNING TAPE SHALL BE CONSIDERED INCIDENTAL TO THE UNIT COST BID FOR PVC GRAVITY SEWER MAIN.

10. ADJUST EXISTING SANITARY SEWER MANHOLE FRAME & COVER, SEWER CLEANOUTS, WATER METER BOXES, VALVE BOXES, AND FIRE HYDRANTS SHALL BE IN ACCORDANCE WITH SECTION 510 AND 520 OF THE VDOT ROAD AND BRIDGE SPECIFICATIONS. FRAME AND COVER SHALL BE SET FLUSH WITH THE PROPOSED GRADE INCLUDING CROSS SLOPES OF PAVEMENTS. ADJUSTMENT OF SANITARY SEWER LATERALS SHALL BE IN ACCORDANCE WITH THE DETAIL ON SHEET 10(2A).

11. PRECAST CONCRETE MANHOLES SHALL BE IN ACCORDANCE WITH THE DETAIL ON SHEET 10(2B). PRECAST CONCRETE MANHOLES SHALL BE OF THE EXTENDED BASE TYPE. THE WALLS OF THE MANHOLES SHALL HAVE A MINIMUM THICKNESS OF 5 INCHES AND BE CONSTRUCTED OF CLASS A4 REINFORCED CONCRETE WITH A MINIMUM COMPRESSIVE STRENGTH OF 4000 PSI AT 28 DAYS AND SHALL BE MANUFACTURED IN ACCORDANCE WITH ASTM DESIGNATION C-478. MANHOLE SECTIONS SHALL BE TONGUE AND GROOVE AND SHALL BE JOINED WITH BUTYL RESIN JOINT SEALER.

   THE LOWEST MANHOLE SECTION SHALL BE PLACED IN THE PRECAST BASE SLAB IN SUCH A MANNER TO PROVIDE THE GREATEST AMOUNT OF BOND AND PREVENT INFILTRATION AND EXFILTRATION. INSERT HOLES FOR THE REQUIRED SEWERS SHALL BE MADE IN THE MANHOLE SECTIONS DURING THE MANUFACTURING OPERATION AND SHALL INCLUDE FLEXIBLE CONNECTIONS COMPRISED OF RUBBER BOOTS AND STAINLESS STEEL STRAPS, SIMILAR TO KOR-N-SEAL OR INTERPACE.

   THE MANHOLE INVERT ELEVATIONS SHALL BE SHAPED AND FINISHED DURING THE CONSTRUCTION OF THE BOTTOM SLAB IN ACCORDANCE WITH THE DETAIL ON SHEET 10(2B).

   ALL LIFTING HOLES SHALL BE FILLED FLUSH WITH AN APPROVED MORTAR UPON COMPLETION OF SETTING. STANDARD MANHOLE STEPS SHALL BE POLYPROPYLENE COATED SMOOTH STEEL ROD, AND SHALL BE SECURELY PLACED IN POSITION IN THE MANHOLE SECTIONS DURING THE MANUFACTURING OF THE SECTION. THE UPPERMOST SECTION OF THE PRECAST MANHOLE SHALL BE TAPERED TO A MINIMUM INTERIOR DIAMETER OF 24 INCHES. THE INSIDE DIAMETER OF THE MANHOLE SHALL BE NOT LESS THAN 48 INCHES. THE INTERMEDIATE STRAIGHT SECTIONS SHALL BE EITHER THREE OR FOUR FEET IN LENGTH. THE LENGTH OF THE LOWER SECTIONS SHALL BE THREE TIMES THE WALL SECTION, AND IN NO CASE SHALL IT BE LESS THAN TWO FEET. THE BOTTOM SECTION SHALL BE PLACED ON A MINIMUM OF 6 INCHES OF GRAVEL, AS SHOWN ON DETAIL ON SHEET 10(2B).

   INTERIOR WALLS OF MANHOLE SHALL BE COATED WITH SAUEREISEN SEWERGARD NO. 210 OR NO 210RS, SEWPERCOAT HS 2000 REGULAR,PERMACAST MS-10,000. MANHOLE LINER SHALL BE APPLIED TO A MINIMUM THICKNESS OF 1/2 INCH.

12. MANHOLE FRAMES AND COVERS SHALL BE IN ACCORDANCE WITH THE DETAIL ON SHEET 10(2B). FRAMES AND COVERS SHALL BE DEWEY BROTHERS MODEL B-1800 OR CAPITAL FOUNDRY C21. ALL FRAMES SHALL BE SECURELY ANCHORED TO THE RELATED STRUCTURES AND SHALL BE INSTALLED SO THAT THE COVER SHALL BE EXPOSED AND FLUSH WITH THE STREET SURFACE WITHOUT THE USE OF RISER RINGS (APPLICABLE FOR NEW FACILITIES ONLY). THE FRAME AND COVER OF MANHOLES OR CLEAN OUTS LOCATED IN SODDED OR OTHER OFF -STREET AREAS SHALL BE SO INSTALLED THAT THE COVERS SHALL BE EXPOSED AND EITHER FLUSH OR ABOVE THE IMMEDIATE SURFACE AS DEEMED ADVISABLE BY THE ENGINEER.

13. DUCTILE IRON PIPE FOR GRAVITY SANITARY SEWER SHALL MEET THE SAME REQUIREMENTS AS PIPE USED FOR THE CITY OF SUFFOLK 12" WATER MAIN.

SUGGESTED GENERAL SEQUENCE OF CONSTRUCTION

EXECUTE THE FOLLOWING INSTALLATIONS IN THE SEQUENCE INDICATED. PROCEDURE FOR ACCOMPLISHING EACH INSTALLATION SHALL BE THE CONTRACTOR'S RESPONSIBILITY. ALL MATERIAL, EQUIPMENT, LABOR AND APPURTENANCES (INCLUDING TEMPORARY PLUGS, COUPLINGS, ETC.) REQUIRED TO ACCOMPLISH INSTALLATIONS IN ACCORDANCE WITH THE SEQUENCE OF CONSTRUCTION SHALL BE INCLUDED IN THE BID COST FOR THE ASSOCIATED PAY ITEM. AN ALTERNATE SEQUENCE MAY BE PREPARED BY THE CONTRACTOR AND SUBMITTED TO THE OWNER FOR APPROVAL. THE ENTIRE LENGTH OF MAIN LINE UTILITY ADJUSTMENTS SHALL BE CONSTRUCTED, TESTED, AND DISINFECTED AS REQUIRED BY SPECIFICATIONS PRIOR TO CONNECTION WITHOUT INTERRUPTION TO ANY EXISTING SERVICE. CONNECTION PIPING SHALL BE TESTED AND DISINFECTED AS REQUIRED BY THE SPECIFICATIONS.

LANE CLOSURES AND STOPPAGES OF TRAFFIC SHALL BE IN ACCORDANCE WITH MAINTENANCE OF TRAFFIC SHEET AND SEQUENCE OF CONSTRUCTION SHEETS.

RESTRAINT OF ALL EXISTING PIPE SHALL BE PERFORMED TO THE EXTENT POSSIBLE PRIOR TO ANY OUTAGE OF UTILITY SERVICE.

OFFSETS AND OTHER ADJUSTMENTS SHALL BE PRE -FABRICATED TO THE EXTENT POSSIBLE PRIOR TO THE OUTAGE.

THE DEFINITION OF TERMS USED IN THE SEQUENCE OF CONSTRUCTION ARE AS FOLLOWS:

SHUTDOWN - SHUTDOWN OF EXISTING WATER OR SEWER FACILITIES SHALL BE IN ACCORDANCE WITH GENERAL NOTES AND LIMITED TO THE DAYS AND HOURS INDICATED BELOW, EXCLUSIVE OF CITY HOLIDAYS AND WEEKENDS. UNLESS INDICATED OTHERWISE, SHUTDOWNS SHALL BE PERMITTED WITHIN THE FOLLOWING SPECIFIED TIME FRAMES.

SUFFOLK WATER AND SEWER FORCE MAINS: 11:00 P.M. TO 5:00 A.M. (MONDAY THROUGH THURSDAY NIGHTS).

PORTSMOUTH WATER MAINS: 11:00 P.M. TO 5:00 A.M. (TUESDAY THROUGH THURSDAY NIGHTS)

GRAVITY SEWER: NO SHUTDOWN ALLOWED.

INSTALL - ALL EFFORTS REQUIRED TO EXCAVATE, ASSEMBLE AND PLACE PIPE AND BACKFILL IN ACCORDANCE WITH PLANS AND SPECIFICATIONS. ALL INSTALLATIONS SHALL BE TESTED, CHLORINATED AND/OR DISINFECTED IN ACCORDANCE WITH THE SPECIFICATIONS AND AS STATED ABOVE.

CONNECTIONS - PIPE ASSEMBLIES, SLEEVES, FITTINGS, VALVES, TEMPORARY AND/OR PERMANENT PLUGS AND COUPLINGS AS INDICATED ON THE PLANS OR AS REQUIRED TO ACHIEVE SEQUENCE OF CONSTRUCTION AT LOCATIONS WHERE PROPOSED WORK MEETS EXISTING FACILITIES.

ACTIVATE - UPON COMPLETION OF INSTALLATION, TESTING AND THE OWNER'S APPROVAL IN ACCORDANCE WITH PLANS AND SPECIFICATIONS, PLACE THE FACILITY INTO OPERATION.

TIME INDIVIDUAL SERVICES MAY BE TAKEN OUT OF OPERATION FOR TRANSFER OF SERVICE:

TRANSFER OF INDIVIDUAL SERVICES SHALL BE LIMITED TO TWO CONSECUTIVE HOURS AND SHALL BE PERFORMED DURING DAYTIME HOURS. THE CONTRACTOR SHALL NOTIFY THE CITY OF SUFFOLK DEPARTMENT OF PUBLIC UTILITIES AND AFFECTED CUSTOMERS 48 HOURS PRIOR TO INDIVIDUAL SERVICE TRANSFERS.

SEQUENCE

A. TYPICAL SEQUENCE FOR RELOCATIONS.

1. RESTRAIN EXISTING PIPE TO THE EXTENT POSSIBLE.
2. INSTALL UTILITY AROUND FUTURE OBSTRUCTION LOCATION ADJACENT TO CONNECTION POINTS.
3. SHUT DOWN EXISTING UTILITY SERVICE.
4. REMOVE EXISTING UTILITY AS REQUIRED TO ACCOMMODATE CONNECTIONS. MAKE CONNECTIONS TO EXISTING UTILITY. ONE SHUT DOWN PERMITTED.
5. ACTIVATE EXISTING UTILITY.
6. ABANDON OR REMOVE EXISTING UTILITY, AS REQUIRED.

PROJECT	SHEET NO.
0337-133-101	10(1B)

PROJECT MANAGER Sherry Earley P.E. City of Suffolk (757) 514-7703
SURVEYED BY PMI INC. (757) 368-0945
DESIGN SUPERVISED BY Ina Johnson P.E. Clark Nexsen (757) 455-5800
DESIGNED BY Clark Nexsen (757) 455-5800

UTILITY DETAILS

REVISED	STATE	ROUTE	PROJECT	SHEET NO.
	VA.	337	0337-133-101, PE-102 RW-202, C-502	10(2)

DESIGN FEATURES RELATING TO CONSTRUCTION OR TO REGULATION AND CONTROL OF TRAFFIC MAY BE SUBJECT TO CHANGE AS DEEMED NECESSARY BY THE DEPARTMENT

VDOT (Division) or Co. Name (Location), Virginia (TECHNICAL DISCIPLINE) | VDOT (Division) or Co. Name (Location), Virginia (TECHNICAL DISCIPLINE)

HAMPTON ROADS PLANNING DISTRICT COMMISSION
REGIONAL CONSTRUCTION STANDARDS

NOTE:
MARK WITH A "W" FOR WATER DISTRIBUTION SYSTEMS OR "S" FOR SANITARY SYSTEMS. TOP & BOTTOM OF LETTER DESIGNATION TO BE IN LINE WITH NOTCHES.

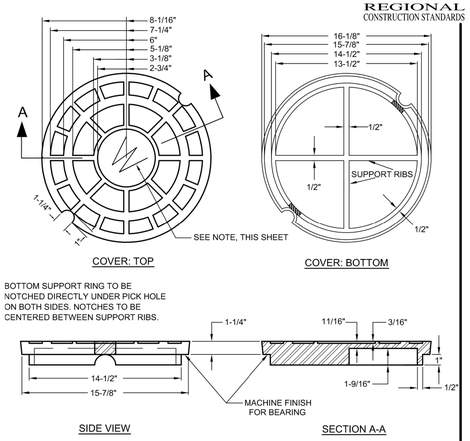

SEE WS_01, SHEET 2 OF 2 FOR NOTES & FRAME DETAILS.

STANDARD VALVE BOX FRAME AND COVER

NOT TO SCALE

REFERENCE	CATEGORY	DATE	SHEET No.	DETAIL No.
200,801,803	WATER & SANITARY	10/06	1 OF 2	WS_01

HAMPTON ROADS PLANNING DISTRICT COMMISSION
REGIONAL CONSTRUCTION STANDARDS

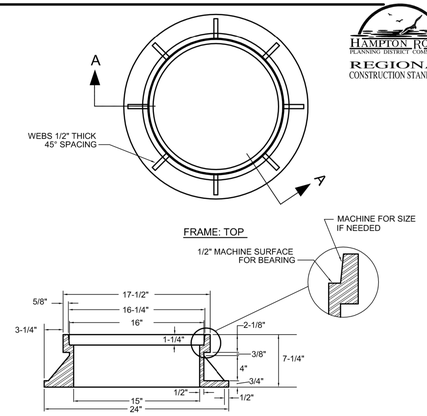

NOTES:
1. VALVE BOX FRAME AND COVER TO BE SUPPLIED BY CAPITAL FOUNDRY OF VIRGINIA, INC., MODEL #NPN-15"N, 160 LBS., OR APPROVED EQUAL.
2. ALL GRAY IRON CASTINGS SHALL CONFORM TO LATEST EDITION OF ASTM A-48, CLASS 30 AND SHALL BE OF UNIFORM QUALITY.
3. ALL CASTING DIMENSIONS SHALL HAVE A TOLERANCE OF 1/8"±.
4. ALL CASTINGS SHALL BE CLEANED BY SHOT BLASTING AND HAND CHIPPING UTILIZING STANDARD INDUSTRY PRACTICES PRIOR TO SHOP APPLICATION OF ASPHALTIC COATING, BY DIPPING.

STANDARD VALVE BOX FRAME AND COVER

NOT TO SCALE

REFERENCE	CATEGORY	DATE	SHEET No.	DETAIL No.
200,801,803	WATER & SANITARY	10/06	2 OF 2	WS_01

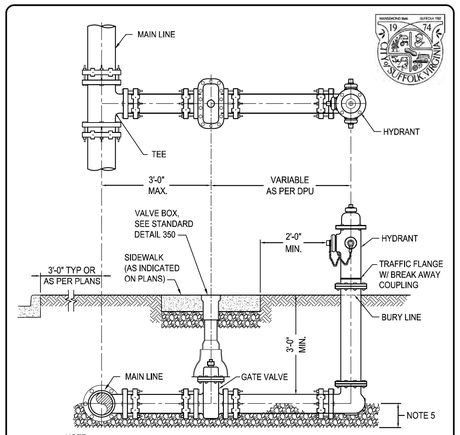

NOTE:
1. ALL HYDRANT CONNECTIONS MUST BE INSPECTED BY THE DEPARTMENT OF PUBLIC UTILITIES INSPECTOR PRIOR TO BACKFILLING.
2. ALL PIPE AND FITTINGS SHALL BE RESTRAINED MECHANICAL JOINT DUCTILE IRON.
3. PUMPER NOZZLE TO FACE ROADWAY UNLESS OTHERWISE SPECIFIED.
4. MAIN LINE TEE, GATE VALVE, AND HYDRANT INLET CONNECTION SHALL BE 6".
5. 6" MIN. COMPACTED VDOT #57 STONE BEDDING AND UP TO SPRINGLINE OF PIPE.

TYPICAL FIRE HYDRANT CONNECTION

NOT TO SCALE

REFERENCE	RELEASE DATE	CATEGORY	SHEET NO.	DPU DETAIL NO.
PFM Vol. II	01/01/13	WATER	1 of 1	151

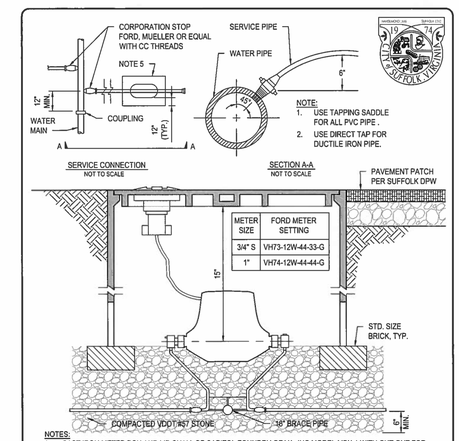

NOTE:
1. USE TAPPING SADDLE FOR ALL PVC PIPE.
2. USE DIRECT TAP FOR DUCTILE IRON PIPE.

NOTES:
1. CAST IRON METER BOX AND LID SHALL BE CAPITOL FOUNDRY OF VA. INC MODEL MBX-1 WITH CUT OUT FOR SENSUS TOUCH READ SYSTEM PIT-LID MODULE. METER SHALL BE SENSUS iPERL TOUCH READ.
2. PROVIDE MUELLER DR2S OR APPROVED EQUAL SADDLES FOR CORPORATION STOPS IN PVC PIPE.
3. CAST IRON METER BOX AND LID NOT TO BE USED IN COMMERCIAL / INDUSTRIAL TRAFFIC AREAS.
4. PROVIDE 1" DIAMETER BRACE PIPE 18" LONG.
5. WHEN WATER METER IS LOCATED WITHIN DRIVEWAY, PROVIDE AN ISOLATION JOINT USING 1/2-INCH PREMOLDED JOINT FILLER 12" AROUND OUTSIDE DIAMETER OF METER BOX TO FACILITATE FUTURE MAINTENANCE.
6. WHEN WATER METER IS LOCATED IN PAVEMENT AND SUBJECTED TO HIGH DENSITY TRAFFIC, PROVIDE A METER BOX AND COVER SUITABLE FOR HS-20 (HS-20-44) LIVE LOADS.

3/4"- 1" WATER METER INSTALLATION DETAIL

NOT TO SCALE

REFERENCE	RELEASE 1	CATEGORY	SHEET NO.	DPU DETAIL NO.
PFM Vol. II	2016	WATER	1 of 1	153

HAMPTON ROADS PLANNING DISTRICT COMMISSION
REGIONAL CONSTRUCTION STANDARDS

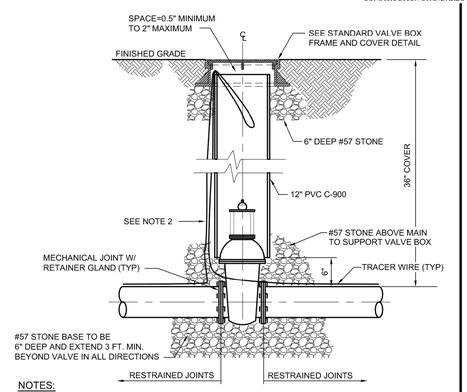

NOTES:
1. IF OPERATING NUT IS GREATER THAN 48" BELOW TOP OF VALVE BOX FRAME, A VALVE STEM EXTENSION MAY BE INSTALLED. THE EXTENSION SHALL REPLACE OR BE SECURELY ATTACHED TO THE NORMAL 2 INCH SQUARE OPERATING NUT, SHALL BE AT LEAST AS STRONG AS THE VALVE STEM, AND SHALL BE COATED IN ACCORDANCE WITH AWWA C550. VALVE STEM EXTENSIONS MUST BE APPROVED BY THE LOCALITY.
2. PLASTIC COATED 10 GAUGE SOLID COPPER TRACER WIRE TO BE ATTACHED WITH PLASTIC STRAPPING EVERY 10 FEET OF LENGTH. WIRE TO BE LOOPED THROUGH VALVE BOX AND EXTEND 12 INCHES ABOVE FINISHED GRADE AND COILED BACK INTO VALVE BOX.

VALVE SETTING DETAIL

NOT TO SCALE

REFERENCE	CATEGORY	DATE	SHEET No.	DETAIL No.
200,801,803	WATER & SANITARY	10/06	1 OF 1	WS_02

HAMPTON ROADS PLANNING DISTRICT COMMISSION
REGIONAL CONSTRUCTION STANDARDS

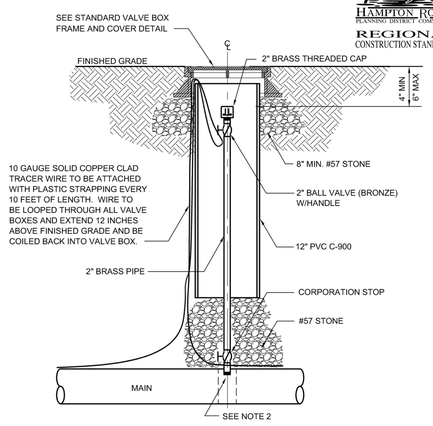

NOTES:
1. 2" BRASS PIPE AND FITTINGS SHALL BE USED FOR AIR RELEASE VALVE.
2. ALL DUCTILE IRON MAINS, SIX INCHES IN DIAMETER AND LARGER, MAY BE TAPPED WITHOUT SADDLES. WHERE PVC MAINS ARE PERMITTED BY LOCALITIES, THE CONNECTION TO A PVC MAIN MUST BE TAPPED WITH A SADDLE. TAPPING SADDLES TO BE INSTALLED IN ACCORDANCE WITH THE MANUFACTURERS SPECIFICATIONS. ALL SADDLES TO BE STAINLESS STEEL OR EPOXY COATED.

MANUAL AIR VENT ASSEMBLY

NOT TO SCALE

REFERENCE	CATEGORY	DATE	SHEET No.	DETAIL No.
200,801,803	WATER & SANITARY	10/06	1 OF 1	WS_03

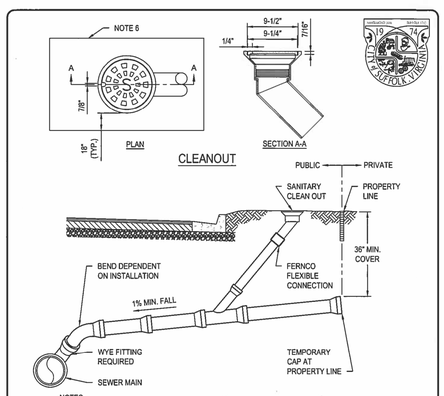

NOTES:
1. SINGLE CLEAN OUT (CAPITOL FOUNDRY ITEM # 110T-CO OR EQUAL) WITH LID MARKED "S" AND PLASTIC THREADED PLUG. CLEAN OUT CASTING TO BE CONNECTED TO 4" RISER PIPE WITH FERNCO FLEXIBLE COUPLING OR APPROVED EQUAL.
2. LATERAL SHALL BE ORIENTED AT 90° TO THE SEWER MAIN.
3. PIPE SIZE FOR COMMERCIAL SERVICE LATERALS SHALL BE DETERMINED BY FLOW CALCULATIONS AND APPROVED BY DPU (TYPICALLY 6" DIAMETER).
4. CLEAN OUT SHALL BE LOCATED IN RIGHT-OF-WAY, 1'-0" FROM PROPERTY LINE. OBSTRUCTIONS OR CONFLICTS WILL BE EVALUATED BY CITY ON A CASE BY CASE BASIS.
5. LATERAL MATERIAL SHALL MATCH SEWER MAIN, UNLESS DIRECTED OTHERWISE BY DPU.
6. WHEN CLEANOUT IS LOCATED WITHIN DRIVEWAY, PROVIDE AN ISOLATION JOINT USING 1/2-INCH PREMOLDED JOINT FILLER 18" AROUND OUTSIDE DIAMETER OF CLEANOUT TO FACILITATE FUTURE MAINTENANCE.

SANITARY LATERAL

NOT TO SCALE

REFERENCE	RELEASE 1	CATEGORY	SHEET NO.	DPU DETAIL NO.
PFM Vol. II	2016	SANITARY	1 of 1	262

FINAL PLANS

PROJECT	SHEET NO.
0337-133-101	10(2)

PROJECT MANAGER Sherry Earley P.E. City of Suffolk (757) 514-7703
SURVEYED BY EMI, INC. (757) 368-0945
DESIGN SUPERVISED BY Ina Johnson P.E. Clark Nexsen (757) 455-5800
DESIGNED BY Clark Nexsen (757) 455-5800

UTILITY DETAILS

REVISED	STATE	ROUTE	PROJECT	SHEET NO.
	VA.	337	0337-133-101, PE-102 RW-202, C-502	10(2A)

DESIGN FEATURES RELATING TO CONSTRUCTION OR TO REGULATION AND CONTROL OF TRAFFIC MAY BE SUBJECT TO CHANGE AS DEEMED NECESSARY BY THE DEPARTMENT

VDOT (Division) or Co. Name (Location), Virginia (TECHNICAL DISCIPLINE) | VDOT (Division) or Co. Name (Location), Virginia (TECHNICAL DISCIPLINE)

NOTES:
1. PROVIDE MIDDLE SECTION TO EXTEND FOR DEEP BOXES.
2. ADJUST BOX TOP FOR STREET PAVEMENT OVERLAY, IF OVERLAY IS PERFORMED.
3. VALVES SHALL OPEN TURNING TO THE LEFT.
4. FOR DEEP APPLICATIONS USE PVC PIPE EXTENSION (WITH BELL BELOW VALVE BOX).

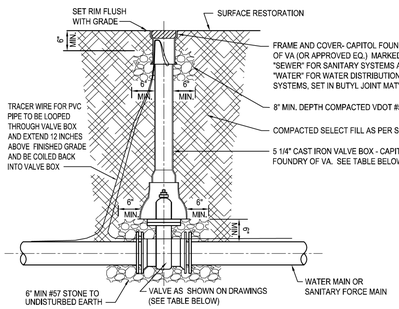

VALVE GUIDE		
APPLICATION	SIZE AND TYPE	
	2" - 12"	> 12"
SANITARY	GATE	GATE
WATER	GATE	BUTTERFLY

VALVE BOX GUIDE			
MODEL #	BOX COMPLETE EXTENSION	TOP SECTION LENGTHS	BOTTOM SECTION LENGTHS
461A	19" - 22"	10"	15"
562A	27" - 37"	16"	24"
564A	39" - 50"	16"	36"
564A	39" - 60"	26"	36"
LONGER BOXES MADE BY ADDING EXTENSION TO MODEL # 564A			

VALVE BOX
NOT TO SCALE

REFERENCE	RELEASE DATE	CATEGORY	SHEET NO.	DPU DETAIL NO.
PFM Vol. II	01/01/13	WATER AND SANITARY	1 of 1	350

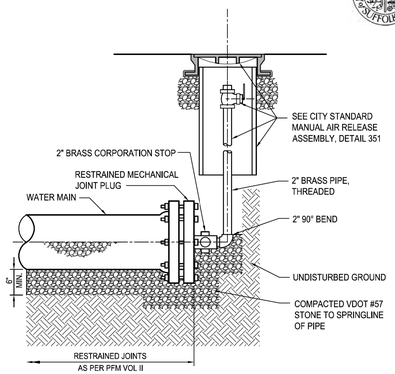

NOTE:
1. FOR PVC PIPING USE MECHANICALLY RESTRAINED CAP.

PIPE TERMINATION AND BLOW-OFF
NOT TO SCALE

REFERENCE	RELEASE DATE	CATEGORY	SHEET NO.	DPU DETAIL NO.
PFM Vol. II	01/01/13	WATER	1 of 1	150

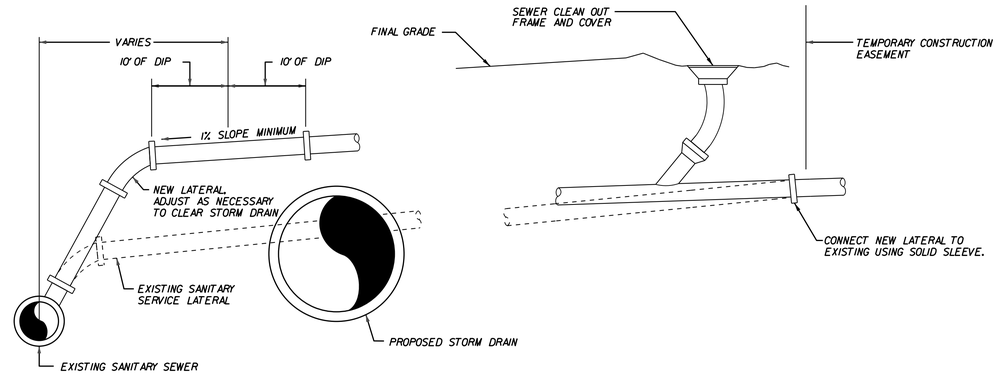

CASE 1

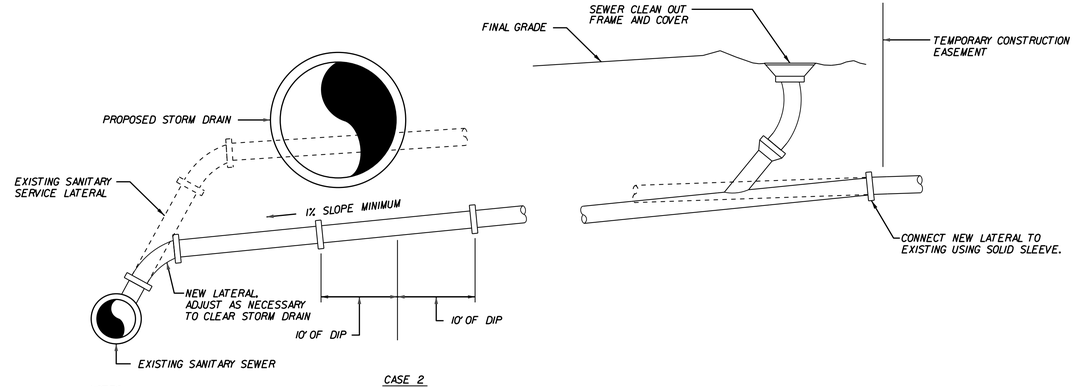

CASE 2

NOTES:

1. CONTRACTOR SHALL FIELD VERIFY SEWER LATERAL CROSSING LOCATIONS AHEAD OF PIPE LAYING ACTIVITIES.
2. CONTRACTOR SHALL CONFINE WORK WITHIN THE LIMITS OF THE TEMPORARY CONSTRUCTION EASEMENT.
3. LATERAL TO BE SAME MATERIAL AS SEWER MAIN.
4. MAINTAIN A MINIMUM 36" COVER OVER LATERAL.
5. LATERALS SHALL BE ADJUSTED TO THE PROPOSED R/W LINE.
6. ADJUSTED SEWER LATERALS SHALL BE RECONNECTED TO THE EXISTING LATERAL ON THE PRIVATE SIDE.

SANITARY SEWER CLEANOUT RELOCATION
NOT TO SCALE

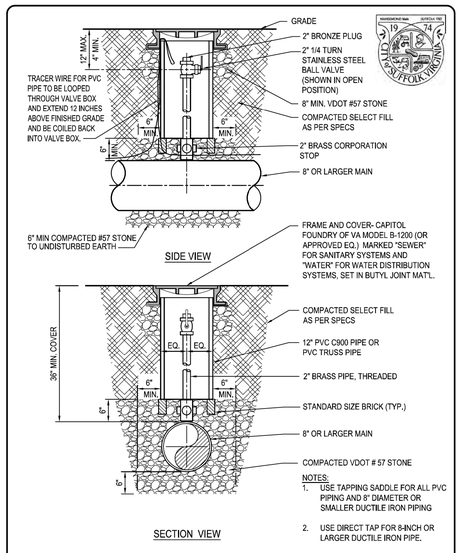

NOTES:
1. USE TAPPING SADDLE FOR ALL PVC PIPING AND 8" DIAMETER OR SMALLER DUCTILE IRON PIPING
2. USE DIRECT TAP FOR 8-INCH OR LARGER DUCTILE IRON PIPE.

MANUAL AIR RELEASE ASSEMBLY
NOT TO SCALE

REFERENCE	RELEASE DATE	CATEGORY	SHEET NO.	DPU DETAIL NO.
PFM Vol. II	01/01/13	WATER AND SANITARY	1 of 1	351

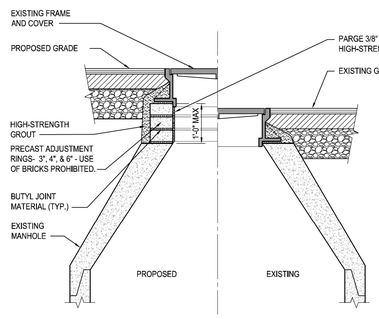

NOTES:
1. PROVIDE LADTECH TAPERED ADJUSTMENT RINGS OR EQUAL WHERE GRADE DICTATES.

MANHOLE RIM ADJUSTMENT
NOT TO SCALE

REFERENCE	RELEASE DATE	CATEGORY	SHEET NO.	DPU DETAIL NO.
PFM Vol. II	01/01/13	SANITARY	1 of 1	256

FINAL PLANS

PROJECT	SHEET NO.
0337-133-101	10(2A)

$TIME$STAMP$

PROJECT MANAGER Sherry Earley P.E. City of Suffolk (757) 514-7703
SURVEYED BY PMI INC. (757) 368-0945
DESIGN SUPERVISED BY Ina Johnson P.E. Clark Nexsen (757) 455-5800
DESIGNED BY Clark Nexsen (757) 455-5800

UTILITY DETAILS

VDOT (Division) or Co. Name (Location), Virginia (TECHNICAL DISCIPLINE)	VDOT (Division) or Co. Name (Location), Virginia (TECHNICAL DISCIPLINE)

REVISED	STATE	ROUTE	PROJECT	SHEET NO.
	VA.	337	0337-133-101, PE-102 RW-202, C-502	10(2B)

DESIGN FEATURES RELATING TO CONSTRUCTION OR TO REGULATION AND CONTROL OF TRAFFIC MAY BE SUBJECT TO CHANGE AS DEEMED NECESSARY BY THE DEPARTMENT

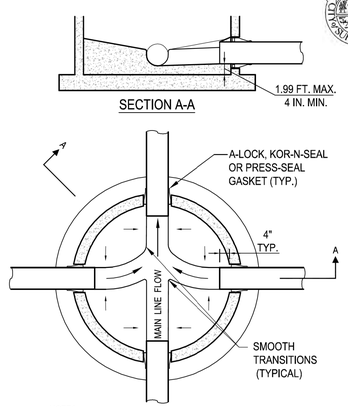

NOTES:
1. INVERT CHANNEL WIDTH SHALL BE EQUAL TO THE INSIDE DIAMETER OF THE CONTRIBUTING SEWER. DEPTH SHALL BE 3/4 OF THE DIAMETER OF THE CONTRIBUTING SEWER.
2. SLOPE BENCH TOWARDS CHANNEL AT 2" PER FOOT MIN.
3. BENCH AND CHANNEL SHALL BE 3000 PSI CONCRETE OR HIGH-STRENGTH, NON-SHRINK HYDRAULIC CEMENT GROUT.
4. PROVIDE GROUT ABOVE PROTRUDING PIPES IN MANHOLE.

MANHOLE INVERT SHAPING

NOT TO SCALE

REFERENCE	RELEASE DATE	CATEGORY	SHEET NO.	DPU DETAIL NO.
PFM Vol. II	01/01/13	SANITARY	1 of 1	257

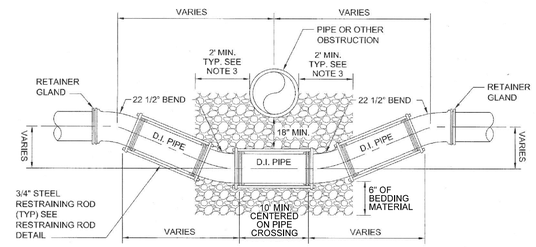

NOTES:
1. SEE PLANS FOR OFFSET DIMENSIONS. NON-UNIFORM OFFSET REQUIRES SPECIAL DESIGN.
2. SEE PLANS FOR JOINT RESTRAINT LENGTHS.
3. BEDDING MATERIAL SHALL BE PLACED A MINIMUM OF 2 FEET BEYOND EACH PIPE AND PROJECT OUTWARD FROM THE CROSSING ALONG BOTH PIPES.

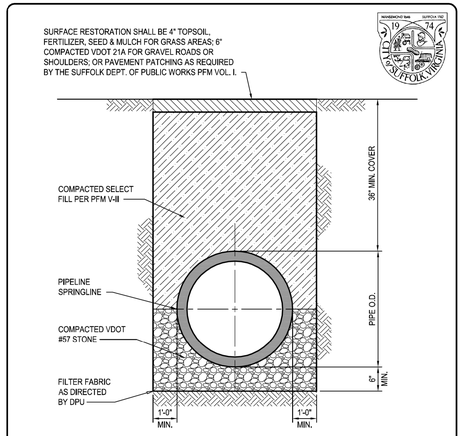

NOTES:
1. TRENCH AND PIPE BEDDING SHALL BE IN ACCORDANCE WITH EARTHWORK SPECIFICATIONS.
2. BELL HOLES SHALL BE HAND SHAPED SO THAT ONLY PIPE BARREL RECEIVES BEARING PRESSURE.
3. PLACE BEDDING TO ENSURE THERE ARE NO VOIDS UNDER OR ALONG PIPE.
4. TRENCH SHALL BE CLEAR OF WATER OR DEBRIS PRIOR TO PLACING BEDDING.
5. COORDINATE PAVEMENT PATCHING REQUIREMENTS WITH DEPARTMENT OF PUBLIC WORKS.
6. CERTIFICATION OF COMPACTION SHALL BE SUBMITTED FROM A GEOTECHNICAL ENGINEERING FIRM.

TRENCH AND PIPE BEDDING DETAIL

NOT TO SCALE

REFERENCE	RELEASE DATE	CATEGORY	SHEET NO.	DPU DETAIL NO.
PFM Vol. II	01/01/13	WATER AND SANITARY	1 of 1	355

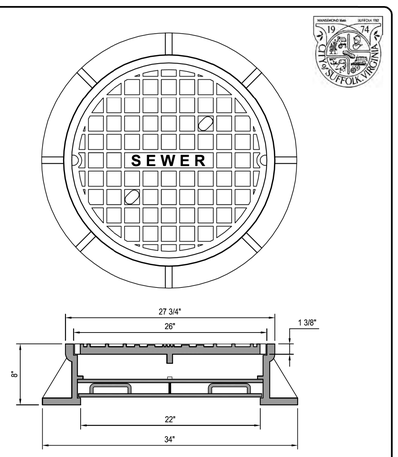

NOTES:
1. FRAME AND COVER BY CAPITOL FOUNDRY MODEL C-21-Y"WT (OR APPROVED EQUAL) MARKED "SEWER".
2. PROVIDE IN AREAS SUBJECT TO FLOODING OR LOCATIONS AS DIRECTED BY DPU.

STANDARD WATERTIGHT MANHOLE FRAME AND COVER

NOT TO SCALE

REFERENCE	RELEASE DATE	CATEGORY	SHEET NO.	DPU DETAIL NO.
PFM Vol. II	01/01/13	SANITARY	1 of 1	259

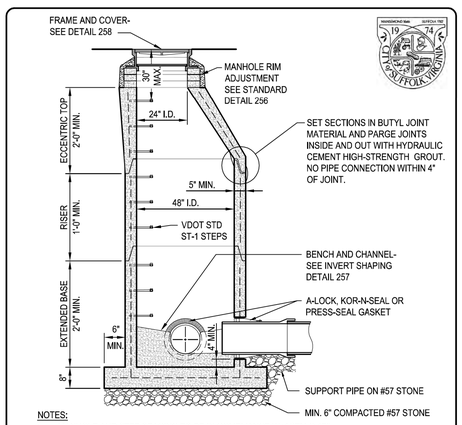

NOTES:
1. MANHOLE AND STEP SPACING TO BE IN COMPLIANCE W/ ASTM C-478.
2. BUTYL JOINT MATERIAL SHALL BE IN COMPLIANCE W/ ASTM C-990.
3. PRECAST LIFT HOLES, IF PROVIDED, SHALL BE PLUGGED W/ HIGH-STRENGTH, NON-SHRINK GROUT TO MAKE WATERTIGHT AFTER INSTALLATION.
4. PROVIDE SPECIFIED PROTECTIVE COATING OR LINING TO PROTECT AGAINST HYDROGEN SULFIDE ATTACK FOR MANHOLES AS PER PFM OR AS SHOWN ON DRAWINGS.
5. USE STANDARD 48" MANHOLE FOR DEPTHS UP TO 12.0 FEET AS MEASURED FROM MANHOLE RIM TO INVERT OF LOWEST PIPE.
6. FOR DEPTHS GREATER THAN 12 FEET, OR WHERE PIPE SIZE DICTATES, USE 60" DIAMETER MANHOLE. REFER TO DETAIL 251.

STANDARD 48" MANHOLE

NOT TO SCALE

REFERENCE	RELEASE DATE	CATEGORY	SHEET NO.	DPU DETAIL NO.
PFM Vol. II	01/01/13	SANITARY	1 of 1	250

FINAL PLANS

PROJECT	SHEET NO.
0337-133-101	10(2B)

DGN $REF001 $REF002 $REF003 $REF004 $REF005 $REF006
$DGNLEV $LEV001 $LEV002 $LEV003 $LEV004 $LEV005 $LEV006

PROJECT MANAGER Sherry Earley, P.E., CITY OF SUFFOLK (757) 514-7703
SURVEYED BY EMI, INC. (757) 368-0945
DESIGN SUPERVISED BY Lou Johnson, P.E., Clark Nexsen (757) 455-5800
DESIGNED BY Clark Nexsen (757) 455-5800

NOTE: CONSTRUCTION BASELINE INTERVAL NUMBERING AND SPACING TURNED OFF ON UTILITY SHEETS 10(3) - 10(7) TO AVOID CONFUSION WITH 12" AND 20" WATER MAIN STATIONING. ONLY BEGINNING AND END OF CONSTRUCTION BASELINE ARE SHOWN.

FINAL PLANS

VDOT (Division) or Co. Name (Location), Virginia (TECHNICAL DISCIPLINE)	VDOT (Division) or Co. Name (Location), Virginia (TECHNICAL DISCIPLINE)

REVISED	STATE	ROUTE	PROJECT	SHEET NO.
	VA.	337	0337-133-101, PE-102 RW-202, C-502	10(3)

DESIGN FEATURES RELATING TO CONSTRUCTION OR TO REGULATION AND CONTROL OF TRAFFIC MAY BE SUBJECT TO CHANGE AS DEEMED NECESSARY BY THE DEPARTMENT

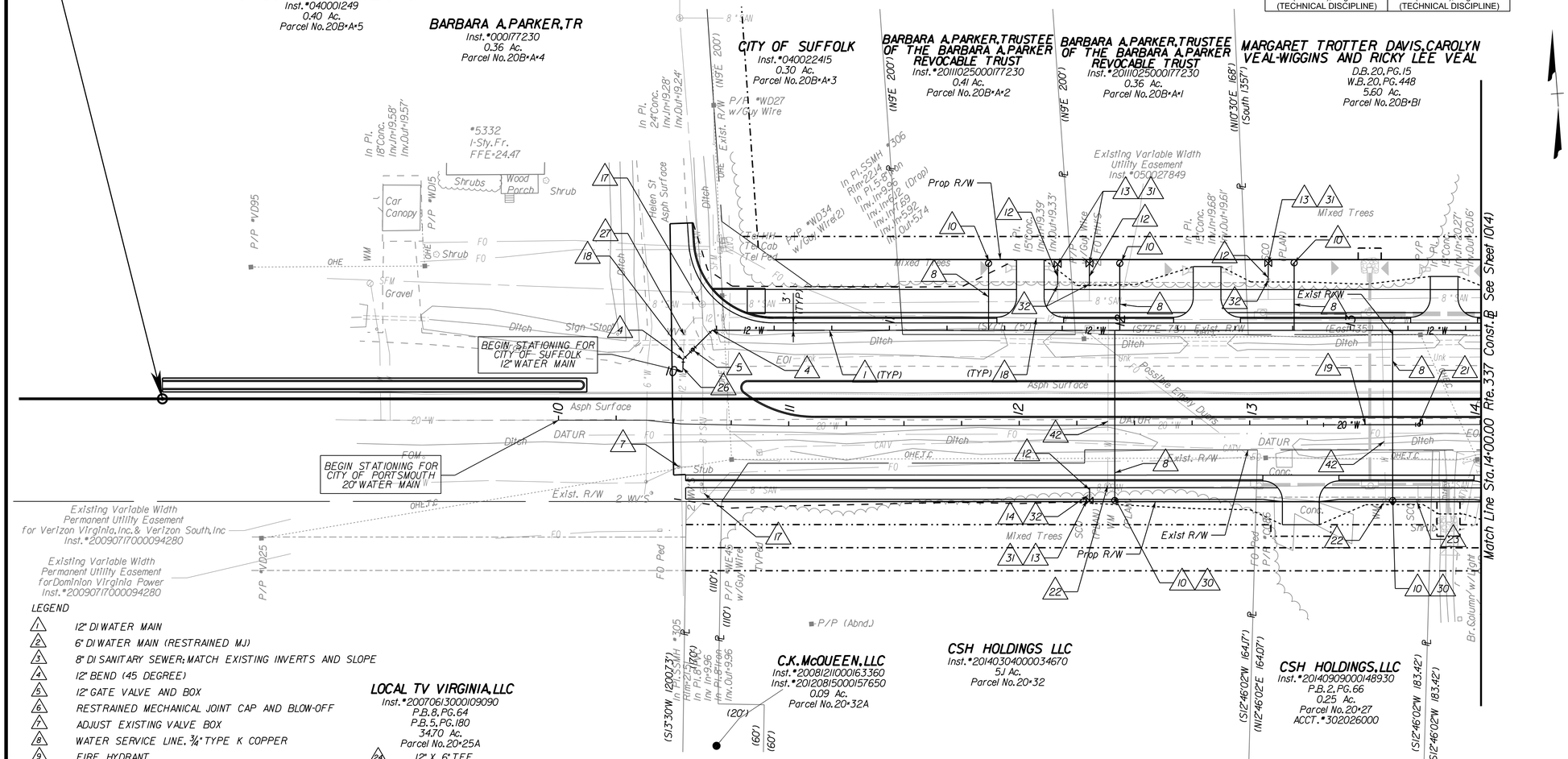

LEGEND

1. 12" DI WATER MAIN
2. 6" DI WATER MAIN (RESTRAINED MJ)
3. 8" DI SANITARY SEWER; MATCH EXISTING INVERTS AND SLOPE
4. 12" BEND (45 DEGREE)
5. 12" GATE VALVE AND BOX
6. RESTRAINED MECHANICAL JOINT CAP AND BLOW-OFF
7. ADJUST EXISTING VALVE BOX
8. WATER SERVICE LINE, 3/4" TYPE K COPPER
9. FIRE HYDRANT
10. 5/8" WATER METER, SETTER, AND BOX
11. CUT AND CAP EXISTING 12" WATER MAIN
12. SANITARY SEWER LATERAL; INSTALL AT MIN. 1% SLOPE AND 36" COVER
13. SANITARY SEWER CLEANOUT
14. REMOVE EXISTING SANITARY SEWER LATERAL
15. PROVIDE 18" MINIMUM VERTICAL SEPARATION AT NEW WATER MAIN & EXISTING SEWER MAIN CROSSING
16. RELOCATE FIRE HYDRANT
17. ADJUST EXISTING FRAME AND COVER
18. REMOVE EXISTING 12" DI WATER MAIN
19. 20" DI OFFSET OF EXISTING WATER MAIN (CITY OF PORTSMOUTH)
20. 6" GATE VALVE AND BOX
21. 2" AIR RELEASE VALVE AND BOX (CITY OF PORTSMOUTH)
22. REMOVE EXISTING WATER METER AND BOX
23. ADJUST EXISTING SANITARY SEWER CLEANOUT
24. 12" X 6" TEE
25. CONNECT TO EXISTING SANITARY MANHOLE
26. CONNECT TO EXISTING WATER MAIN
27. REMOVE EXISTING VALVE AND BOX
28. REMOVE EXISTING 6" DI WATER MAIN
29. SANITARY MANHOLE
30. RECONNECT TO EXISTING PRIVATE WATER SERVICE LINE
31. RECONNECT TO EXISTING PRIVATE SANITARY SEWER LATERAL
32. REMOVE EXISTING SANITARY SEWER CLEANOUT
33. 6" BEND (45 DEGREE)
34. CUT AND CAP WATER SERVICE LINE AT CORPORATION STOP, CRIMP WATER SERVICE LINE, AND CLOSE CORPORATION STOP VALVE
35. REMOVE EXISTING SANITARY MANHOLE
36. REMOVE EXISTING 8" SANITARY SEWER
37. REMOVE EXISTING FIRE HYDRANT
38. FIRE HYRDRANT (RELOCATED)
39. CONNECT TO EXISTING 6" WATER MAIN
40. 8" PVC SANITARY SEWER
41. CUT IN 2" GATE VALVE ON EXISTING 2" SANITARY FORCE MAIN AT PROPOSED RIGHT-OF-WAY
42. REMOVE EXISTING WATER SERVICE LINE
43. WATER SERVICE LINE, 1" TYPE K COPPER
44. 1" GATE VALVE W/ HANDWHEEL
45. CONNECT TO EXISTING PRIVATE SANITARY SEWER FORCE MAIN

SUBSURFACE UTILITY OWNERS

1. HRSD
P.O. BOX 5911
VIRGINIA BEACH, VA 23471
Attn: Ryan Radspinner
Tel: (757) 460-4232

2. CITY OF SUFFOLK
Dept of Public Utilities
157 N. Main St., Suite D
SUFFOLK, VA 23434
Attn: Larry Andrews
Tel: (757) 514-7683

3. VERIZON VIRGINIA, INC.
2920 Elmhurst Lane
Portsmouth, VA 23701-2739
Attn: Carl Henler or Gerald Husky
Tel: (757) 875-2541

4. COLUMBIA GAS OF VIRGINIA
7001 HARBOR VIEW BLVD
SUFFOLK, Va 23435
Attn: Brett Fearnley
Tel: (757) 638-2414

5. CHARTER COMMUNICATIONS
216 Moore Avenue
Suffolk, Va. 23434
Attn: Kim Mann
Tel: (757) 735- 4007

6. CITY OF PORTSMOUTH
Dept. of Public Utilities
Attn: Erin Trimyer
Tel: (757) 393-8691
801 CRAWFORD ST.
PORTSMOUTH, VA 23705

7. LEVEL 3 COMMUNICATIONS INC.
John Dalton
2600 ELTHAM AVE. STE 103
NORFOLK, VA. 23513
Tel: (757) 777-7715

8. DOMINION VIRGINIA POWER
1600 HAMILTON AVE.
PORTSMOUTH, VA 23707
Attn: Stephen Heroux
Tel: (757) 393-3991

9. VERIZON SOUTH INC.
3011 Hungart Spring Rd. 2nd Flr
RICHMOND, VA 23228
Attn: Joe Gibson
TEL. (804) 772-7312

REFERENCES (PROFILES, DETAIL & DRAINAGE DESCRIPTION SHEETS, ETC.)	
Plan Sheet	3
Utility Profile	10(3A)
Drainage Descr.	2C
Entrance Profile	8(1)
Pavement Markings, Marker & Signing Plan	9(3)
Lighting & Landscape Plan	11(3)

SCALE 0 25' 50'

PROJECT	SHEET NO.
0337-133-101	10(3)

$TIME$STAMP$

d4146010(3).dgn 5/20/2016 1:36:27 PM

PROJECT MANAGER Stacey Earley, P.E., City of Suffolk (757) 514-7703
SURVEYED BY P.W.I. INC. (757) 368-0945
DESIGN SUPERVISED BY Jon Johnson, P.E., Clark Nexsen (757) 455-5800
DESIGNED BY Clark Nexsen (757) 455-5800

REVISED	STATE	STATE ROUTE	STATE PROJECT	SHEET NO.
	VA.	337	0337-133-101, PE-102, RW-202, C-502	10(3A)

DESIGN FEATURES RELATING TO CONSTRUCTION OR TO REGULATION AND CONTROL OF TRAFFIC MAY BE SUBJECT TO CHANGE AS DEEMED NECESSARY BY THE DEPARTMENT

VDOT (Division) or Co. Name (Location), Virginia (TECHNICAL DISCIPLINE)

FINAL PLANS

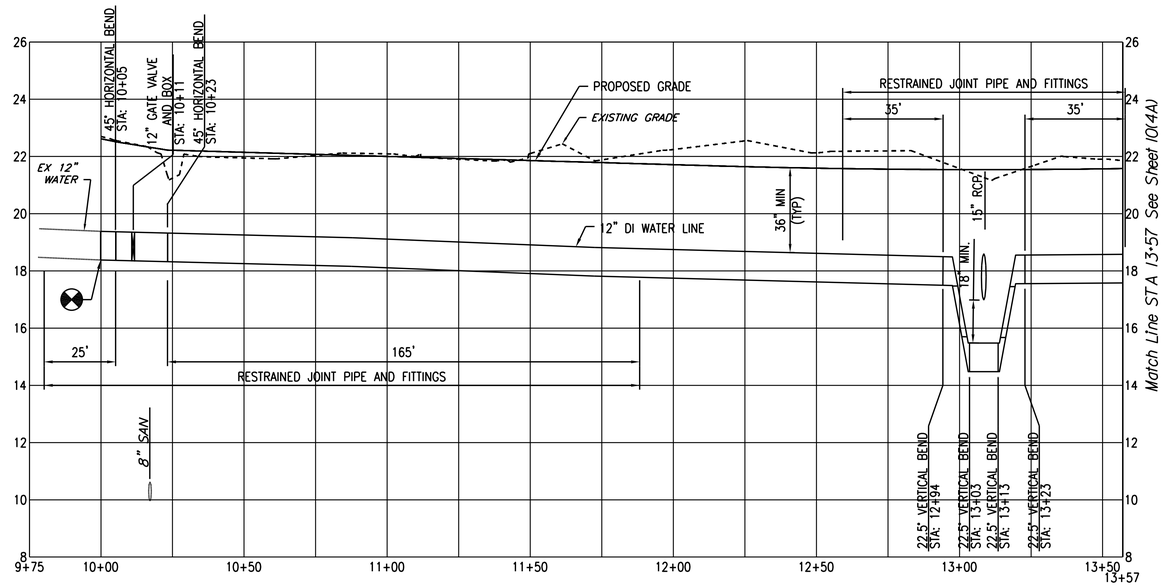

12" WATER LINE PROFILE STATION 10+00 TO 13+57

SCALE: HORIZ. = 1" = 25'
VERT. = 1" = 2.5'

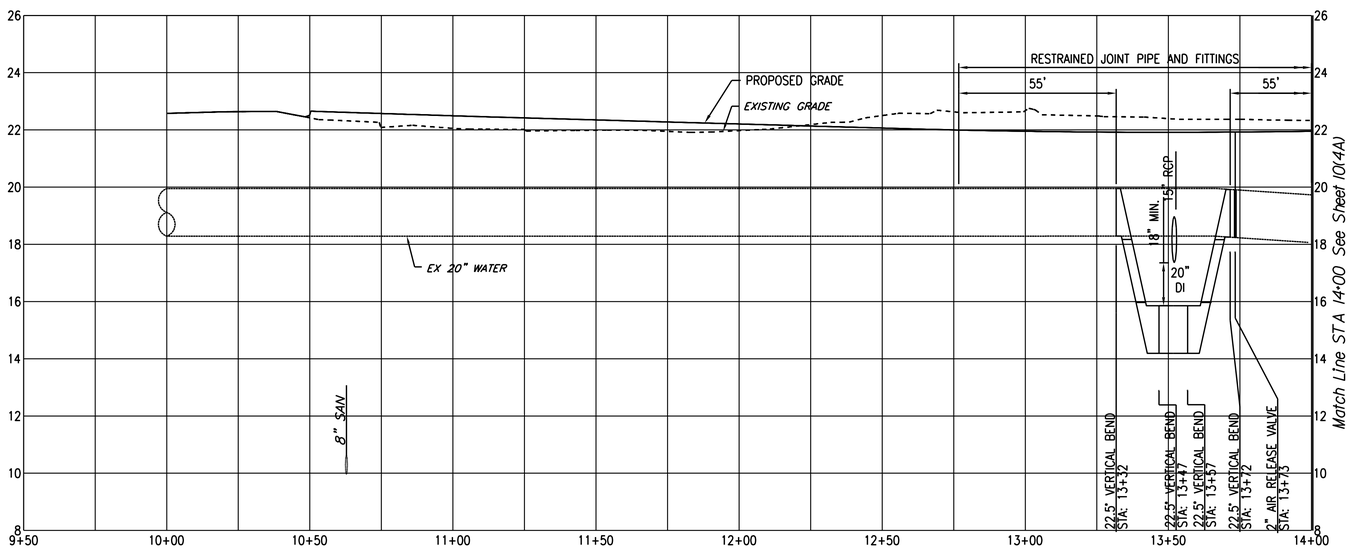

EX. 20" WATER LINE PROFILE STATION 10+00 TO 14+00

SCALE: HORIZ. = 1" = 25'
VERT. = 1" = 2.5'

STATIONS AND GRADES SHOWN ARE REFERENCED TO THE UTILITY PIPING AND NOT TO THE ROADWAY STATIONING

VERT. 1"=2.5' SCALE 0 2.5' 5' 10'

HORIZ. 1"=25' SCALE 0 25' 50'

PROJECT	SHEET NO.
0337-133-101	10(3A)

$TIME$STAMP$

DGN $REF001 $REF002 $REF003 $REF004 $REF005 $REF006
$DGNLEV $LEV001 $LEV002 $LEV003 $LEV004 $LEV005 $LEV006

PROJECT MANAGER Sherry, Earley, P.E., City of Suffolk (757) 514-7703
SURVEYED BY EMI, INC. (757) 368-0945
DESIGN SUPERVISED BY Ira Johnson, P.E., Clark Nexsen (757) 455-5800
DESIGNED BY Clark Nexsen (757) 455-5800

REVISED	STATE	STATE ROUTE	STATE PROJECT	SHEET NO.
	VA.	337	0337-133-101, PE-102 RW-202, C-502	10(4)

DESIGN FEATURES RELATING TO CONSTRUCTION OR TO REGULATION AND CONTROL OF TRAFFIC MAY BE SUBJECT TO CHANGE AS DEEMED NECESSARY BY THE DEPARTMENT

VDOT (Division) or Co. Name (Location), Virginia (TECHNICAL DISCIPLINE) | VDOT (Division) or Co. Name (Location), Virginia (TECHNICAL DISCIPLINE)

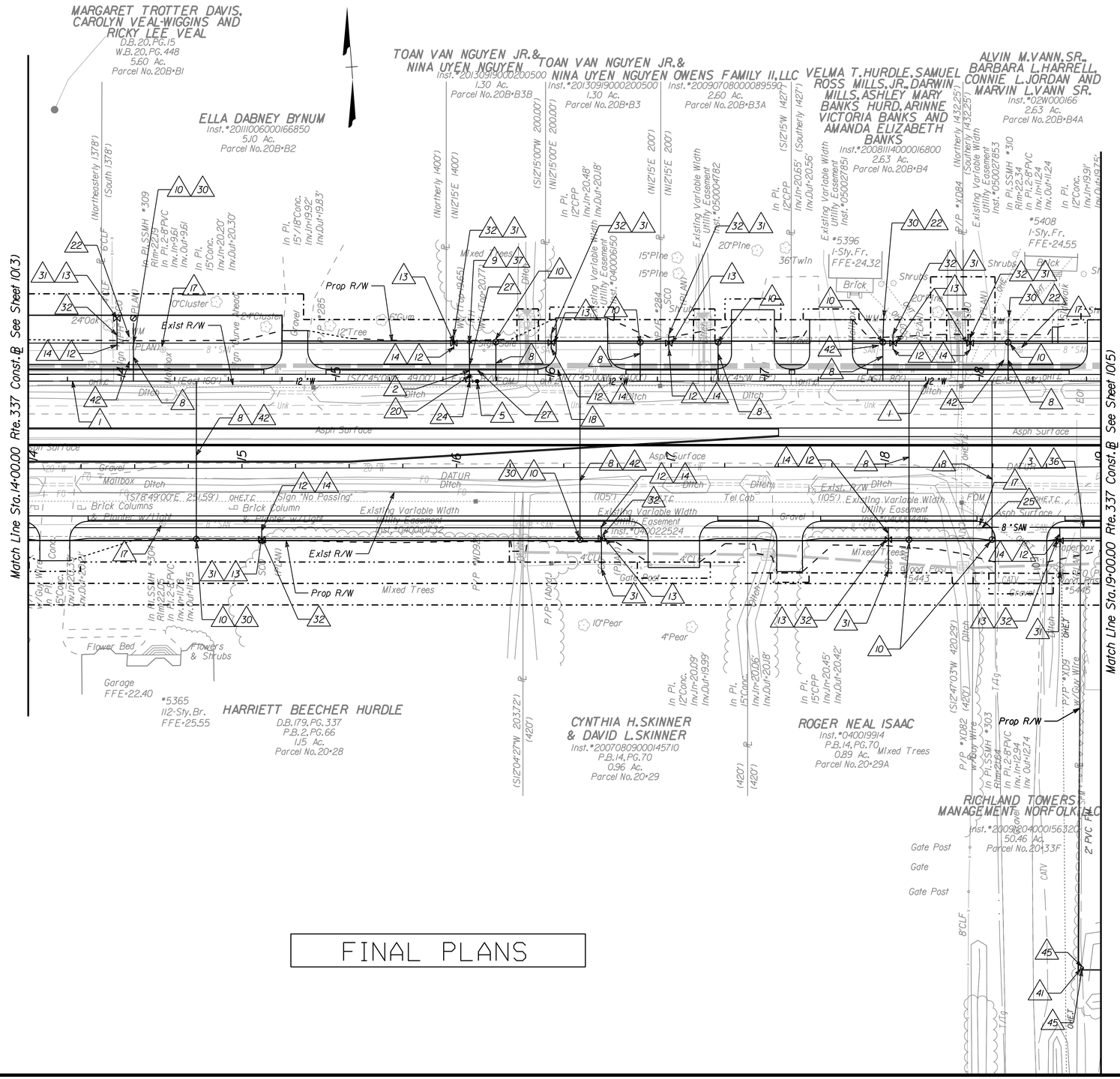

FINAL PLANS

LEGEND

1. 12" DI WATER MAIN
2. 6" DI WATER MAIN (RESTRAINED MJ)
3. 8" DI SANITARY SEWER; MATCH EXISTING INVERT AND SLOPE
4. 12" BEND (45 DEGREE)
5. 12" GATE VALVE AND BOX
6. RESTRAINED MECHANICAL JOINT CAP AND BLOW-OFF
7. ADJUST EXISTING VALVE BOX
8. WATER SERVICE LINE, ¾" TYPE K COPPER
9. FIRE HYDRANT
10. ⅝" WATER METER, SETTER, AND BOX
11. CUT AND CAP EXISTING 12" WATER MAIN
12. SANITARY SEWER LATERAL; INSTALL AT MIN. 1% SLOPE AND 36" COVER
13. SANITARY SEWER CLEANOUT
14. REMOVE EXISTING SANITARY SEWER LATERAL
15. PROVIDE 18" MINIMUM VERTICAL SEPARATION AT NEW WATER METER MAIN & EXISTING SEWER MAIN CROSSING
16. RELOCATE FIRE HYDRANT
17. ADJUST EXISTING FRAME AND COVER
18. REMOVE EXISTING 12" DI WATER MAIN
19. 20" DI OFFSET OF EXISTING WATER MAIN (CITY OF PORTSMOUTH)
20. 6" GATE VALVE AND BOX
21. 2" AIR RELEASE VALVE AND BOX (CITY OF PORTSMOUTH)
22. REMOVE EXISTING WATER METER AND BOX
23. ADJUST EXISTING SANITARY SEWER CLEANOUT
24. 12" X 6" TEE
25. CONNECT TO EXISTING SANITARY MANHOLE
26. CONNECT TO EXSITING WATER MAIN
27. REMOVE EXISTING VALVE AND BOX
28. REMOVE EXISTING 6" DI WATER MAIN
29. SANITARY MANHOLE
30. RECONNECT TO EXISTING PRIVATE WATER SERVICE LINE
31. RECONNECT TO EXISTING PRIVATE SANITARY SEWER LATERAL
32. REMOVE EXISTING SANITARY SEWER CLEANOUT
33. 6" BEND (45 DEGREE)
34. CUT AND CAP WATER SERVICE LINE AT CORPORATION STOP, CRIMP WATER SERVICE LINE, AND CLOSE CORPORATION STOP VALVE
35. REMOVE EXISTING SANITARY MANHOLE
36. REMOVE EXISTING 8" SANITARY SEWER
37. REMOVE EXISTING FIRE HYDRANT
38. FIRE HYRDRANT (RELOCATED)
39. CONNECT TO EXISTING 6" WATER MAIN
40. 8" PVC SANITARY SEWER
41. CUT-IN 2" GATE VALVE ON EXISTING 2" SANITARY FORCE MAIN AT PROPOSED RIGHT-OF-WAY
42. REMOVE EXISTING WATER SERVICE LINE
43. WATER SERVICE LINE, 1" TYPE K COPPER
44. 1" GATE VALVE W/HANDWHEEL
45. CONNECT TO EXISTING PRIVATE SANITARY SEWER FORCE MAIN

SCALE 0 25' 50'

REFERENCES (PROFILES, DETAIL & DRAINAGE DESCRIPTION SHEETS, ETC.)

Plan Sheet	4
Utility Profile	10(4A)
Drainage Descr.	2C
Entrance Profile	8(1)
Pavement Markings, Marker & Signing Plan	9(4)
Lighting & Landscape Plan	11(4)

PROJECT	SHEET NO.
0337-133-101	10(4)

$TIME$STAMP$

d4146010(4).dgn 5/20/2016 1:36:32 PM

PROJECT MANAGER Stacey Earley, P.E., City of Suffolk (757) 514-7703
SURVEYED BY P.W.I.INC. (757) 368-0945
DESIGN SUPERVISED BY Jon Johnson, P.E., Clark Nexsen (757) 455-5800
DESIGNED BY Clark Nexsen (757) 455-5800

REVISED	STATE	STATE ROUTE	STATE PROJECT	SHEET NO.
	VA.	337	0337-133-101, PE-102, RW-202, C-502	10(4A)

DESIGN FEATURES RELATING TO CONSTRUCTION OR TO REGULATION AND CONTROL OF TRAFFIC MAY BE SUBJECT TO CHANGE AS DEEMED NECESSARY BY THE DEPARTMENT

VDOT (Division) or Co. Name (Location), Virginia (TECHNICAL DISCIPLINE)

FINAL PLANS

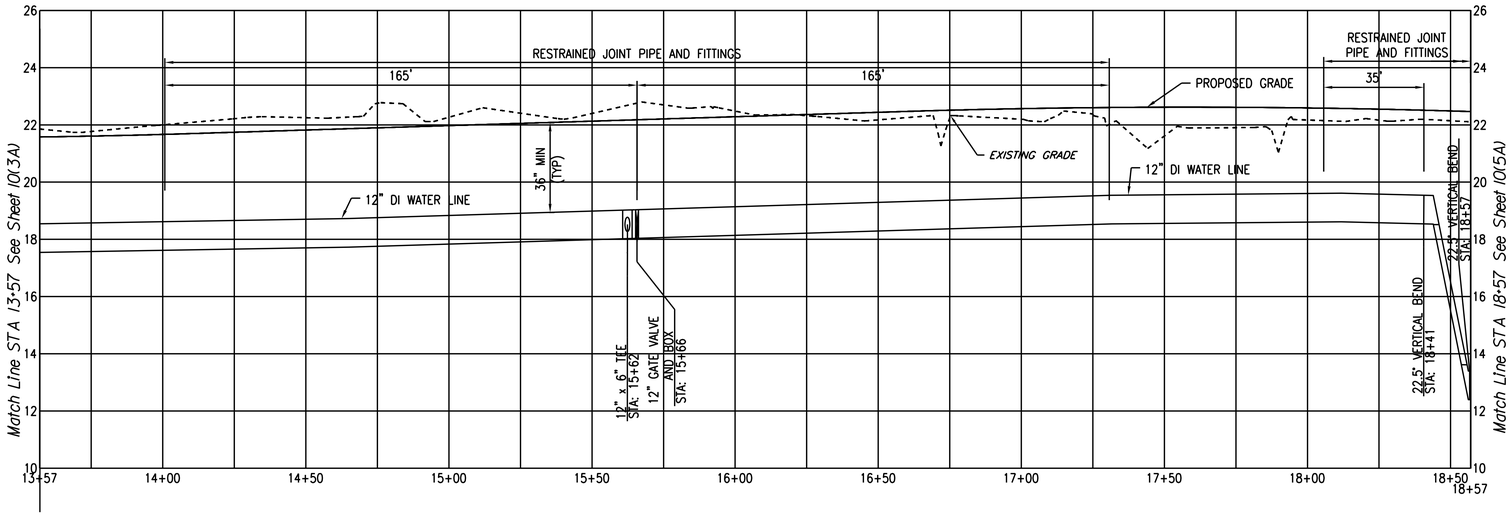

12" WATER LINE PROFILE STATION 13+57 TO 18+57

SCALE: HORIZ. = 1" = 25'
VERT. = 1" = 2.5'

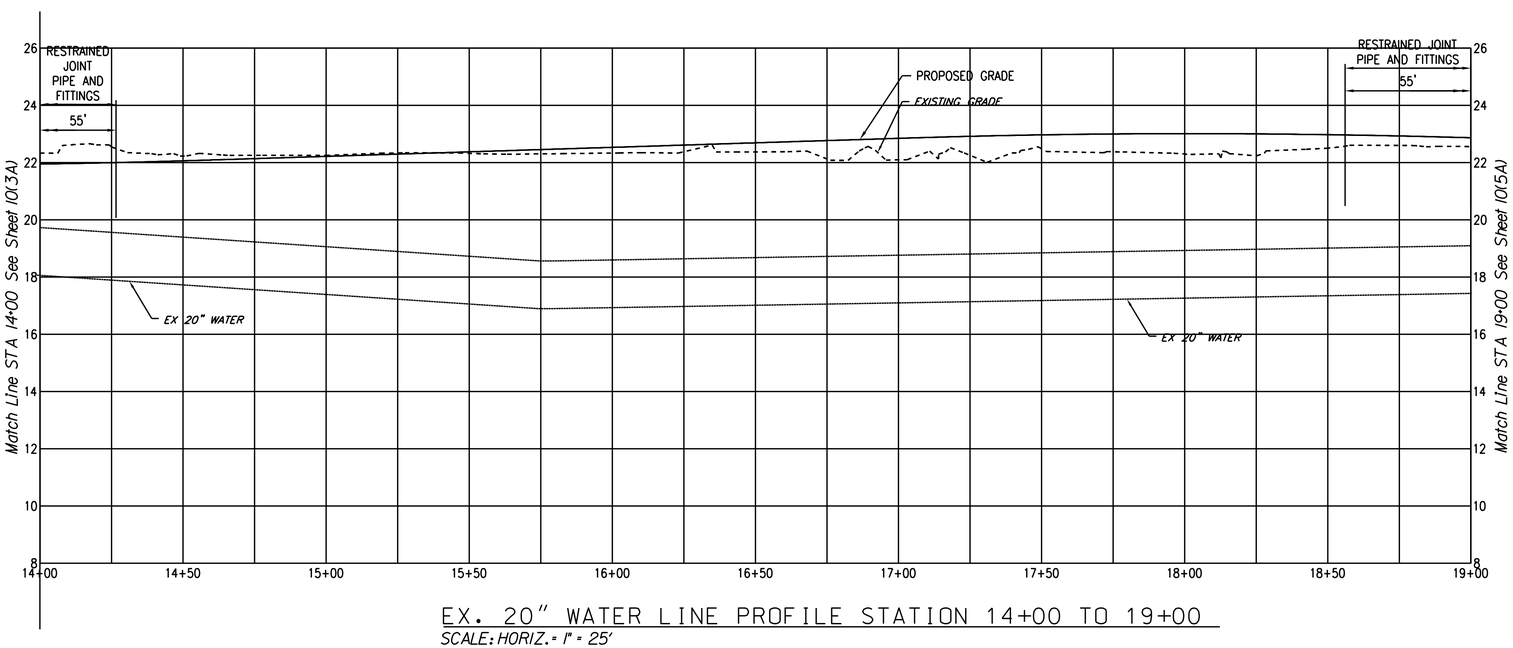

EX. 20" WATER LINE PROFILE STATION 14+00 TO 19+00

SCALE: HORIZ. = 1" = 25'
VERT. = 1" = 2.5'

STATIONS AND GRADES SHOWN ARE REFERENCED TO THE UTILITY PIPING AND NOT TO THE ROADWAY STATIONING

VERT. 1"=2.5' SCALE 0 2.5' 5' 10'

HORIZ. 1"=25' SCALE 0 25' 50'

PROJECT	SHEET NO.
0337-133-101	10(4A)

$TIME$STAMP$

DGN $REF001 $REF002 $REF003 $REF004 $REF005 $REF006
$DGNLEV $LEV001 $LEV002 $LEV003 $LEV004 $LEV005 $LEV006

PROJECT MANAGER Sherry Earley, P.E., City of Suffolk (757) 514-7703
SURVEYED BY EMI, INC. (757) 368-0945
DESIGN SUPERVISED BY Lea Johnson, P.E., Clark Nexsen (757) 455-5800
DESIGNED BY Clark Nexsen (757) 455-5800

FINAL PLANS

VDOT (Division) or Co. Name (Location), Virginia (TECHNICAL DISCIPLINE)	VDOT (Division) or Co. Name (Location), Virginia (TECHNICAL DISCIPLINE)

REVISED	STATE	STATE ROUTE	STATE PROJECT	SHEET NO.
	VA.	337	0337-133-101, PE-102 RW-202, C-502	10(5)

DESIGN FEATURES RELATING TO CONSTRUCTION OR TO REGULATION AND CONTROL OF TRAFFIC MAY BE SUBJECT TO CHANGE AS DEEMED NECESSARY BY THE DEPARTMENT

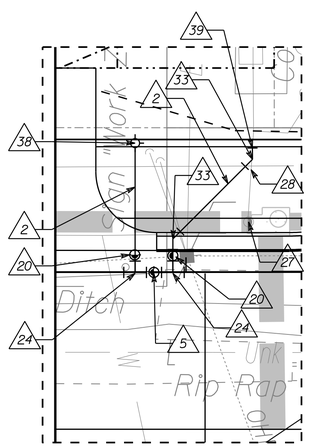

INSET A
SCALE: 1"=10'

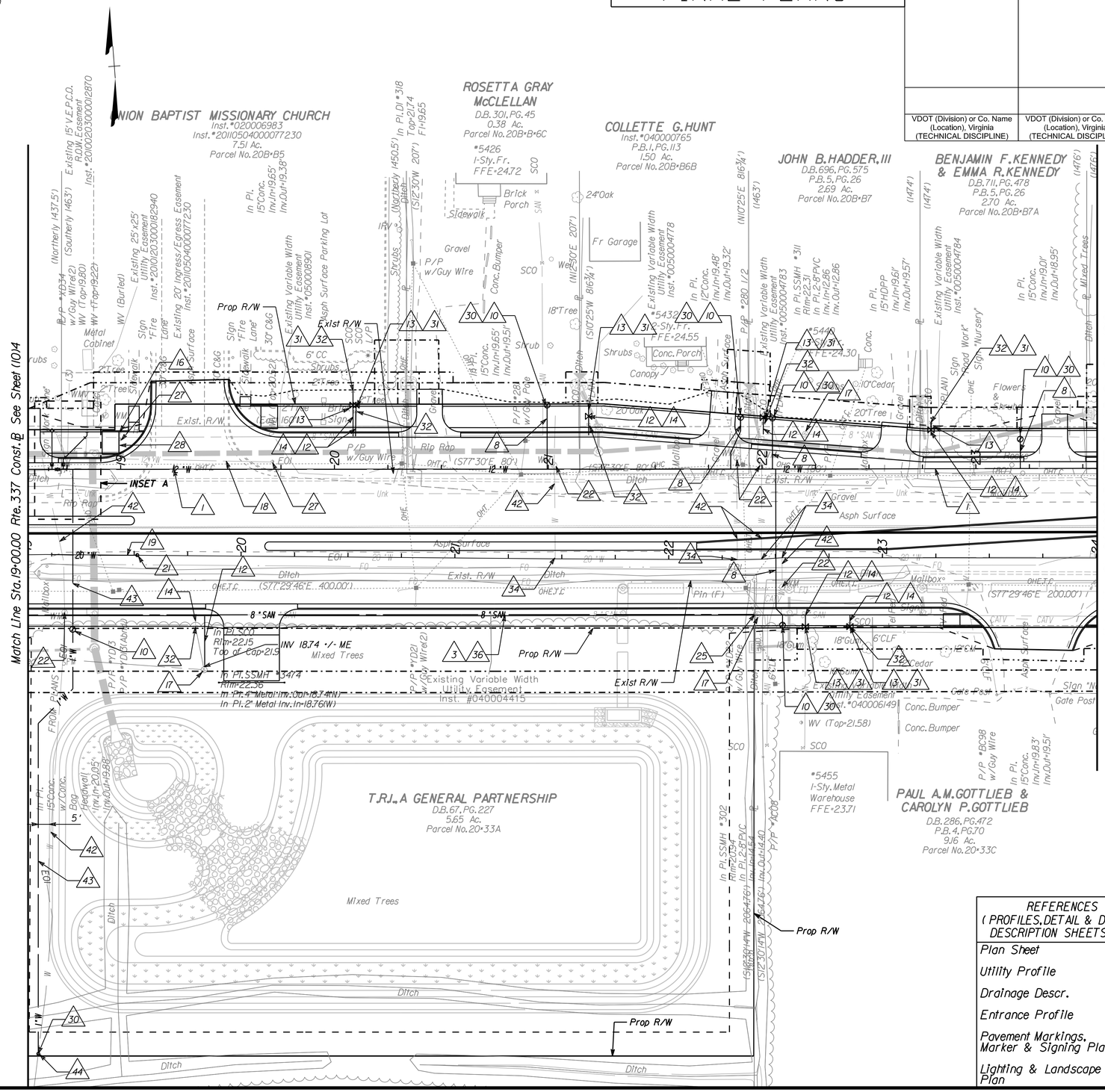

LEGEND

1. 12" DI WATER MAIN
2. 6" DI WATER MAIN (RESTRAINED MJ)
3. 8" DI SANITARY SEWER; MATCH EXISTING INVERT AND SLOPE
4. 12" BEND (45 DEGREE)
5. 12" GATE VALVE AND BOX
6. RESTRAINED MECHANICAL JOINT CAP AND BLOW-OFF
7. ADJUST EXISTING VALVE BOX
8. WATER SERVICE LINE, ¾" TYPE K COPPER
9. FIRE HYDRANT
10. ⅝" WATER METER, SETTER, AND BOX
11. CUT AND CAP EXISTING 12" WATER MAIN
12. SANITARY SEWER LATERAL; INSTALL AT MIN. 1% SLOPE AND 36" COVER
13. SANITARY SEWER CLEANOUT
14. REMOVE EXISTING SANITARY SEWER LATERAL
15. PROVIDE 18" MINIMUM VERTICAL SEPARATION AT NEW WATER MAIN & EXISTING SEWER MAIN CROSSING
16. RELOCATE FIRE HYDRANT
17. ADJUST EXISTING FRAME AND COVER
18. REMOVE EXISTING 12" DI WATER MAIN
19. 20" DI OFFSET OF EXISTING WATER MAIN (CITY OF PORTSMOUTH)
20. 6" GATE VALVE AND BOX
21. 2" AIR RELEASE VALVE AND BOX (CITY OF PORTSMOUTH)
22. REMOVE EXISTING WATER METER AND BOX
23. ADJUST EXISTING SANITARY SEWER CLEANOUT
24. 12" X 6" TEE
25. CONNECT TO EXISTING SANITARY MANHOLE
26. CONNECT TO EXSITING WATER MAIN
27. REMOVE EXISTING VALVE AND BOX
28. REMOVE EXISTING 6" DI WATER MAIN
29. SANITARY MANHOLE
30. RECONNECT TO EXISTING PRIVATE WATER SERVICE LINE
31. RECONNECT TO EXISTING PRIVATE SANITARY SEWER LATERAL
32. REMOVE EXISTING SANITARY SEWER CLEANOUT
33. 6" BEND (45 DEGREE)
34. CUT AND CAP WATER SERVICE LINE AT CORPORATION STOP, CRIMP WATER SERVICE LINE, AND CLOSE CORPORATION STOP VALVE
35. REMOVE EXISTING SANITARY MANHOLE
36. REMOVE EXISTING 8" SANITARY SEWER
37. REMOVE EXISTING FIRE HYDRANT
38. FIRE HYRDRANT (RELOCATED)
39. CONNECT TO EXISTING 6" WATER MAIN
40. 8" PVC SANITARY SEWER
41. CUT-IN 2" GATE VALVE ON EXISTING 2" SANITARY FORCE MAIN AT PROPOSED RIGHT-OF-WAY
42. REMOVE EXISTING WATER SERVICE LINE
43. WATER SERVICE LINE, 1" TYPE K COPPER
44. 1" GATE VALVE W/HANDWHEEL
45. CONNECT TO EXISTING PRIVATE SANITARY SEWER FORCE MAIN

REFERENCES (PROFILES, DETAIL & DRAINAGE DESCRIPTION SHEETS, ETC.)	
Plan Sheet	5
Utility Profile	10(5A)
Drainage Descr.	2C
Entrance Profile	8(1)
Pavement Markings, Marker & Signing Plan	9(5)
Lighting & Landscape Plan	11(5)

SCALE 0 25' 50'
SCALE 0 10' 20'

PROJECT	SHEET NO.
0337-133-101	10(5)

$TIME$STAMP$

d4146010(5).dgn 5/20/2016 1:36:35 PM

DGN $REF001 $REF002 $REF003 $REF004 $REF005 $REF006
$DGNLEV $LEV001 $LEV002 $LEV003 $LEV004 $LEV005 $LEV006

PROJECT MANAGER Stacey Earley, P.E., City of Suffolk (757) 514-7703
SURVEYED BY P.W.I.INC. (757) 368-0945
DESIGN SUPERVISED BY Jay Johnson, P.E., Clark Nexsen (757) 455-5800
DESIGNED BY Clark Nexsen, (757) 455-5800

REVISED	STATE	STATE ROUTE	STATE PROJECT	SHEET NO.
	VA.	337	0337-133-101, PE-102, RW-202, C-502	10(5A)

DESIGN FEATURES RELATING TO CONSTRUCTION OR TO REGULATION AND CONTROL OF TRAFFIC MAY BE SUBJECT TO CHANGE AS DEEMED NECESSARY BY THE DEPARTMENT

VDOT (Division) or Co. Name (Location), Virginia (TECHNICAL DISCIPLINE)

FINAL PLANS

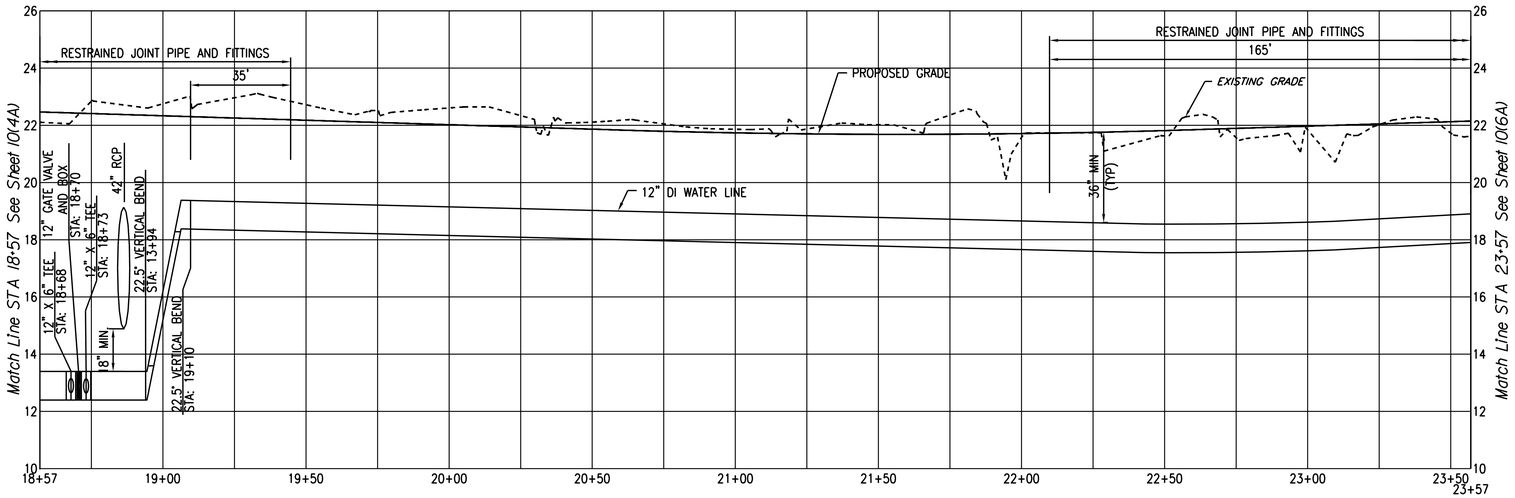

12" WATER LINE PROFILE STATION 18+57 TO 23+57

SCALE: HORIZ. = 1" = 25'
VERT. = 1" = 2.5'

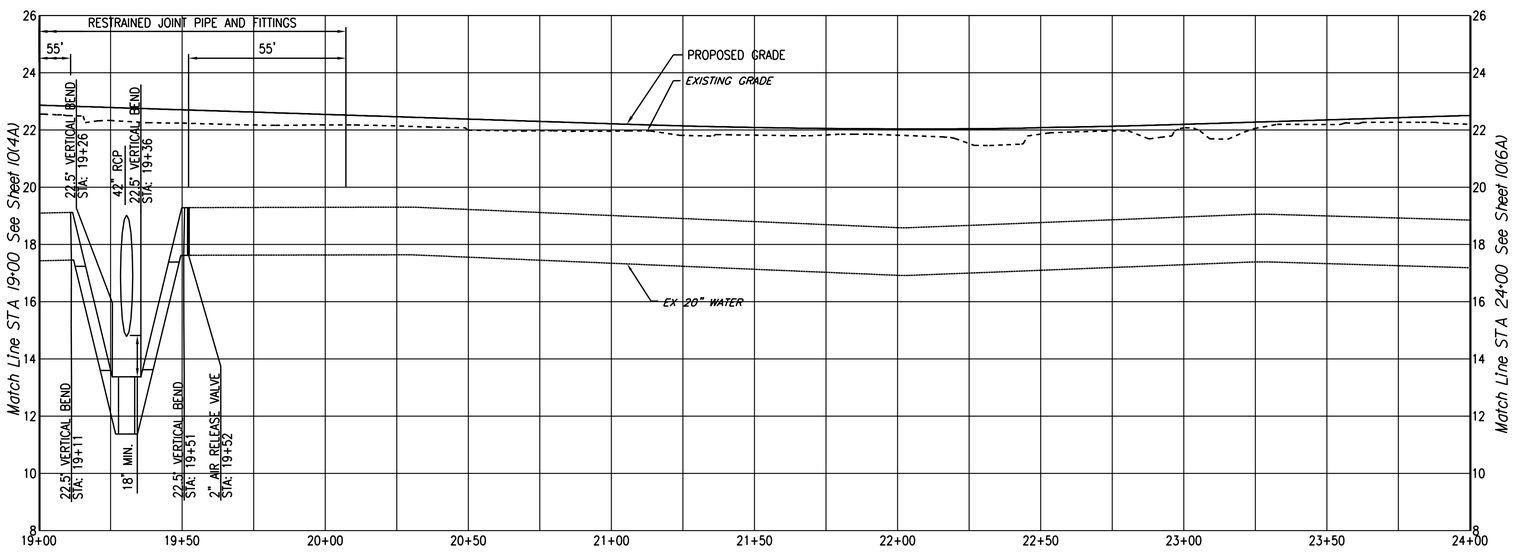

EX. 20" WATER LINE PROFILE STATION 19+00 TO 24+00

SCALE: HORIZ. = 1" = 25'
VERT. = 1" = 2.5'

STATIONS AND GRADES SHOWN ARE REFERENCED TO THE UTILITY PIPING AND NOT TO THE ROADWAY STATIONING

VERT. 1"=2.5' SCALE 0 2.5' 5' 10'

HORIZ. 1"=25' SCALE 0 25' 50'

PROJECT	SHEET NO.
0337-133-101	10(5A)

$TIME$ $STAMP$

d4146010(5a).dgn 5/20/2016 1:36:37 PM

PROJECT MANAGER Stacey Earley, P.E., City of Suffolk (757) 514-7703
SURVEYED BY P.M.J.INC. (757) 368-0945
DESIGN SUPERVISED BY Ian Johnson, P.E., Clark Nexsen (757) 455-5800
DESIGNED BY Clark Nexsen (757) 455-5800

REVISED	STATE	STATE ROUTE	STATE PROJECT	SHEET NO.
	VA.	337	0337-133-101, PE-102, RW-202, C-502	10(5B)

DESIGN FEATURES RELATING TO CONSTRUCTION OR TO REGULATION AND CONTROL OF TRAFFIC MAY BE SUBJECT TO CHANGE AS DEEMED NECESSARY BY THE DEPARTMENT

VDOT (Division) or Co. Name (Location), Virginia (TECHNICAL DISCIPLINE)

FINAL PLANS

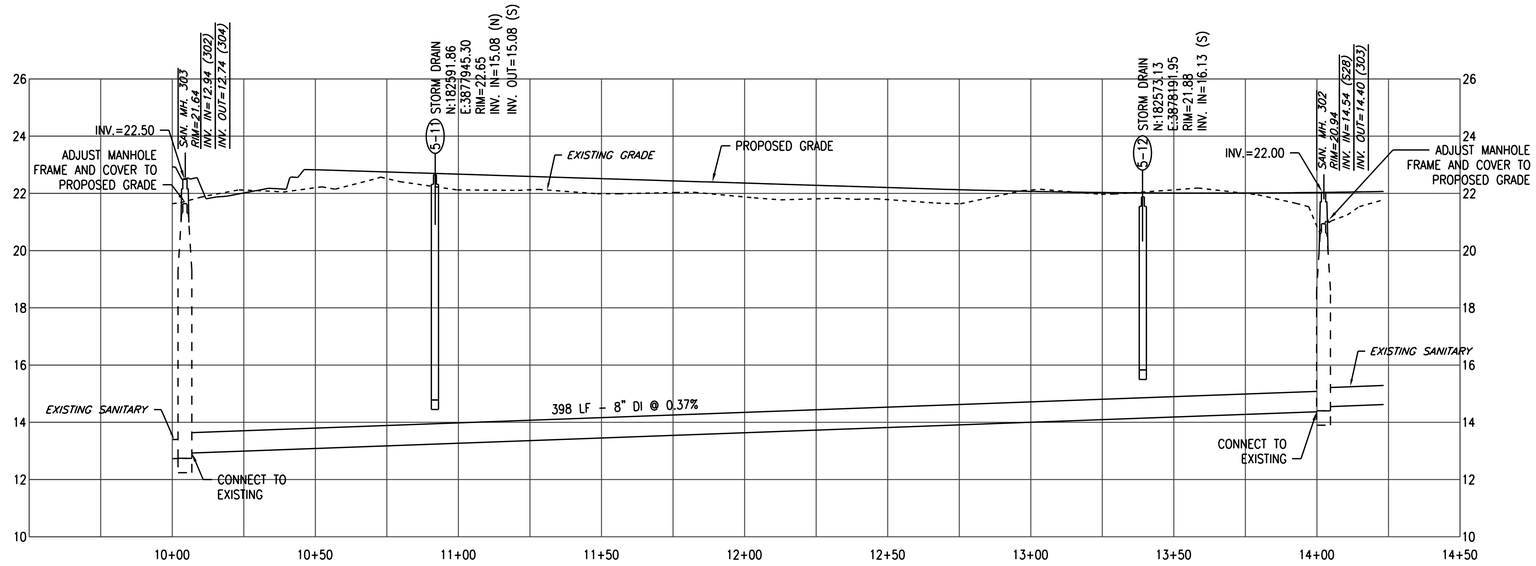

SANITARY SEWER PROFILE

SCALE: HORIZ. = 1" = 25'
VERT. = 1" = 2.5'

STATIONS AND GRADES SHOWN ARE REFERENCED TO THE UTILITY PIPING AND NOT TO THE ROADWAY STATIONING

VERT. 1"=2.5' SCALE 0 2.5' 5' 10'

HORIZ. 1"=25' SCALE 0 25' 50'

PROJECT	SHEET NO.
0337-133-101	10(5B)

$TIME$STAMP$

DGN $REF001 $REF002 $REF003 $REF004 $REF005 $REF006
$DGNLEV $LEV001 $LEV002 $LEV003 $LEV004 $LEV005 $LEV006

PROJECT MANAGER Sherry Earley P.E. City of Suffolk (757) 514-7703
SURVEYED BY EMI INC. (757) 368-0945
DESIGN SUPERVISED BY Ina Johnson P.E. Clark Nexsen (757) 455-5800
DESIGNED BY Clark Nexsen (757) 455-5800

FINAL PLANS

VDOT (Division) or Co. Name (Location), Virginia (TECHNICAL DISCIPLINE)	VDOT (Division) or Co. Name (Location), Virginia (TECHNICAL DISCIPLINE)

REVISED	STATE	ROUTE	PROJECT	SHEET NO.
	VA.	337	0337-133-101, PE-102 RW-202, C-502	10(6)

DESIGN FEATURES RELATING TO CONSTRUCTION OR TO REGULATION AND CONTROL OF TRAFFIC MAY BE SUBJECT TO CHANGE AS DEEMED NECESSARY BY THE DEPARTMENT

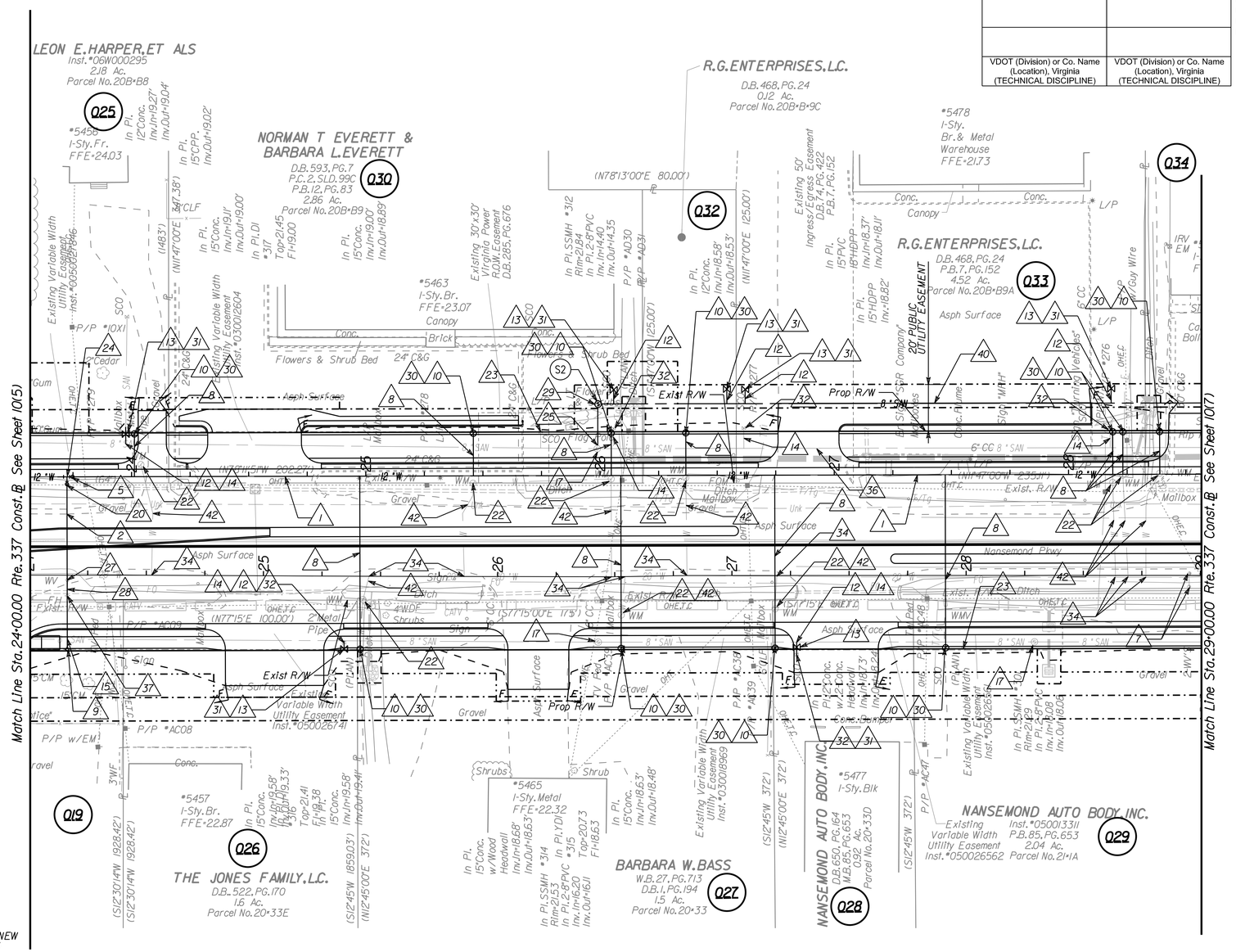

LEGEND

1. 12" DI WATER MAIN
2. 6" DI WATER MAIN (RESTRAINED MJ)
3. 8" DI SANITARY SEWER; MATCH EXISTING INVERTS AND SLOPE
4. 12" BEND (45 DEGREE)
5. 12" GATE VALVE AND BOX
6. RESTRAINED MECHANICAL JOINT CAP ND BLOW-OFF
7. ADJUST EXISTING VALVE BOX
8. WATER SERVICE LINE, 3/4" TYPE K COPPER
9. FIRE HYDRANT
10. 5/8" WATER METER, SETTER, AND BOX
11. CUT AND CAP EXISTING 12" WATER MAIN
12. SANITARY SEWER LATERAL; INSTALL AT MIN. 1% SLOPE AND 36" COVER
13. SANITARY SEWER CLEANOUT
14. REMOVE EXISTING SANITARY SEWER LATERAL
15. PROVIDE 18" MINIMUM VERTICAL SEPARATION AT NEW WATER MAIN & EXISTING SEWER MAIN CROSSING
16. RELOCATE FIRE HYDRANT
17. ADJUST EXISTING FRAME AND COVER
18. REMOVE EXISTING 12" DI WATER MAIN
19. 20" DI OFFSET OF EXISTING WATER MAIN (CITY OF PORTSMOUTH)
20. 6" GATE VALVE AND BOX
21. 2" AIR RELEASE VALVE AND BOX (CITY OF PORTSMOUTH)
22. REMOVE EXISTING WATER METER AND BOX
23. ADJUST EXISTING SANITARY SEWER CLEANOUT
24. 12" X 6" TEE
25. CONNECT TO EXISTING SANITARY MANHOLE
26. CONNECT TO EXSITING WATER MAIN
27. REMOVE EXISTING VALVE AND BOX
28. REMOVE EXISTING 6" DI WATER MAIN
29. SANITARY MANHOLE
30. RECONNECT TO EXISTING PRIVATE WATER SERVICE LINE
31. RECONNECT TO EXISTING PRIVATE SANITARY SEWER LATERAL
32. REMOVE EXISTING SANITARY SEWER CLEANOUT
33. 6" BEND (45 DEGREE)
34. CUT AND CAP WATER SERVICE LINE AT CORPORATION STOP, CRIMP WATER SERVICE LINE, AND CLOSE CORPORATION STOP VALVE
35. REMOVE EXISTING SANITARY MANHOLE
36. REMOVE EXISTING 8" SANITARY SEWER
37. REMOVE EXISTING FIRE HYDRANT
38. FIRE HYRDRANT (RELOCATED)
39. CONNECT TO EXISTING 6" WATER MAIN
40. 8" PVC SANITARY SEWER
41. CUT-IN 2" GATE VALVE ON EXISTING 2" SANITARY FORCE MAIN AT PROPOSED RIGHT-OF-WAY
42. REMOVE EXISTING WATER SERVICE LINE
43. WATER SERVICE LINE, 1" TYPE K COPPER
44. 1" GATE VALVE W/HANDWHEEL
45. CONNECT TO EXISTING PRIVATE SANITARY SEWER FORCE MAIN

REFERENCES (PROFILES, DETAIL & DRAINAGE DESCRIPTION SHEETS, ETC.)	
Plan Sheet	6
Utility Profile	10(6A)
Drainage Descr.	2C
Entrance Profile	8(1)
Pavement Markings, Marker & Signing Plan	9(6)
Lighting & Landscape Plan	11(6)

SCALE 0 25' 50'

PROJECT	SHEET NO.
0337-133-101	10(6)

$TIME$STAMP$

d4146010(6).dgn 5/20/2016 1:36:38 PM

PROJECT MANAGER Stacey Earley, P.E., City of Suffolk (757) 514-7703
SURVEYED BY P.W.I.INC. (757) 368-0945
DESIGN SUPERVISED BY Jay Johnson, P.E., Clark Nexsen (757) 455-5800
DESIGNED BY Clark Nexsen, (757) 455-5800

REVISED	STATE	STATE ROUTE	STATE PROJECT	SHEET NO.
	VA.	337	0337-133-101, PE-102, RW-202, C-502	10(6A)

DESIGN FEATURES RELATING TO CONSTRUCTION OR TO REGULATION AND CONTROL OF TRAFFIC MAY BE SUBJECT TO CHANGE AS DEEMED NECESSARY BY THE DEPARTMENT

VDOT (Division) or Co. Name (Location), Virginia (TECHNICAL DISCIPLINE)

FINAL PLANS

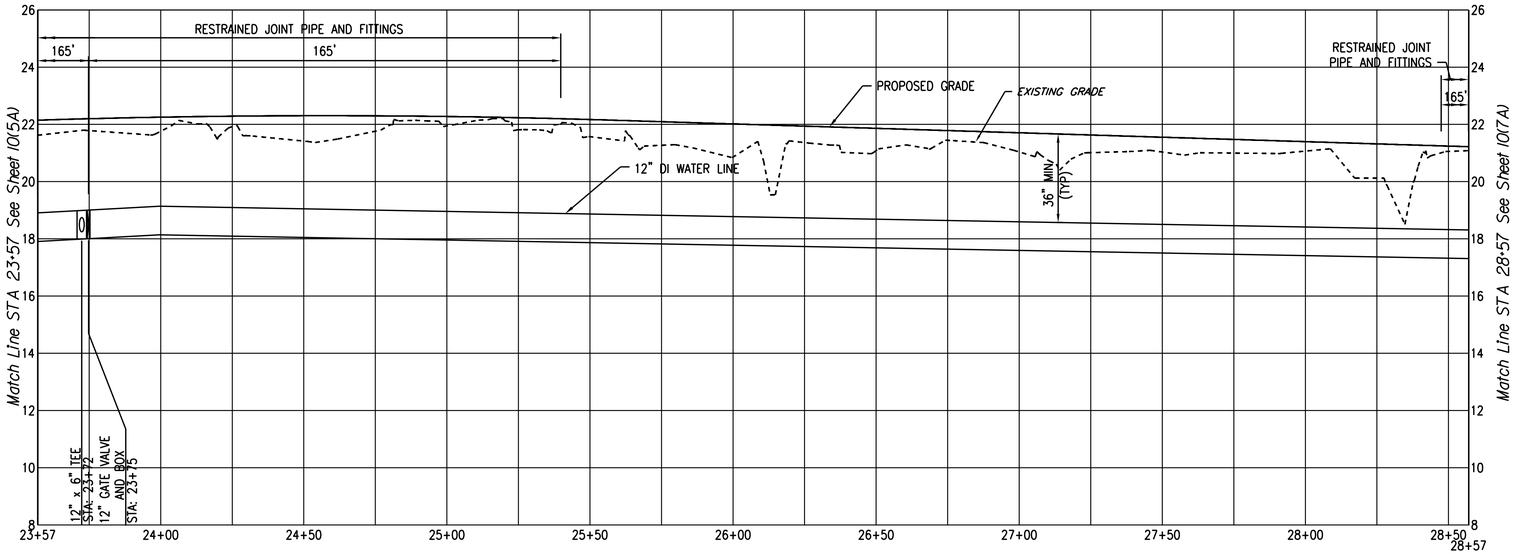

12" WATER LINE PROFILE STATION 23+57 TO 28+57

SCALE: HORIZ. = 1" = 25'
VERT. = 1" = 2.5'

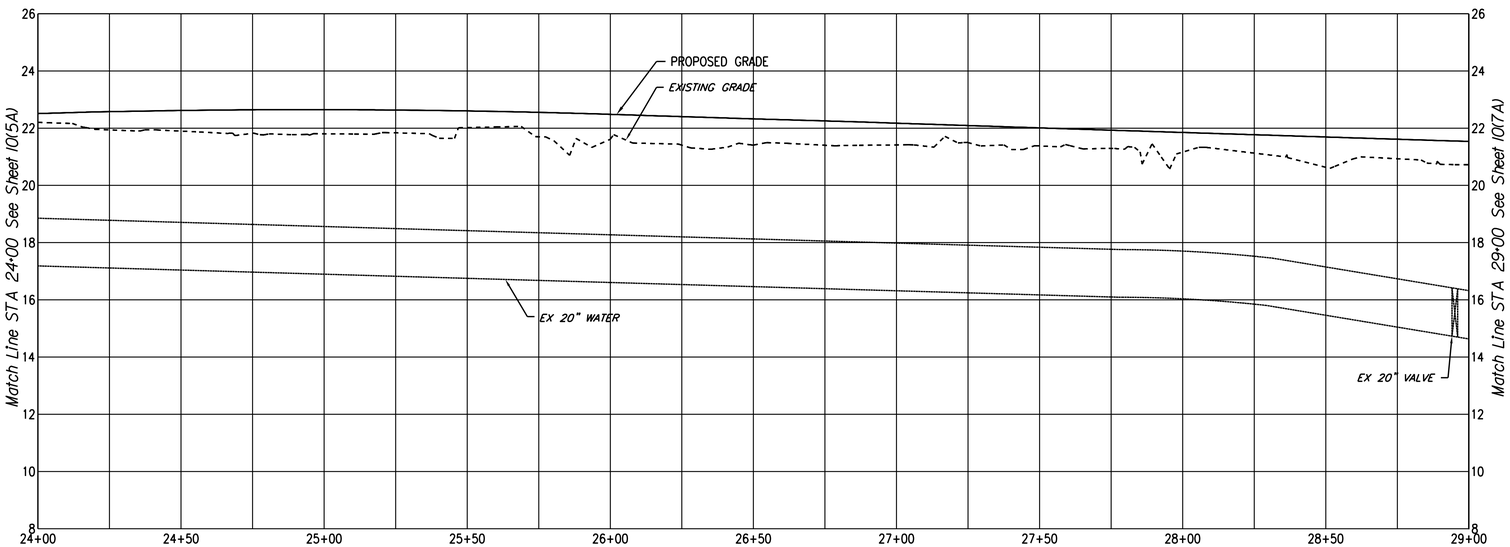

EX.20" WATER LINE PROFILE STATION 24+00 TO 29+00

SCALE: HORIZ. = 1" = 25'
VERT. = 1" = 2.5'

STATIONS AND GRADES SHOWN ARE REFERENCED TO THE UTILITY PIPING AND NOT TO THE ROADWAY STATIONING

SCALE
VERT. 1"=2.5' 0 2.5' 5' 10'
SCALE
HORIZ. 1"=25' 0 25' 50'

PROJECT	SHEET NO.
0337-133-101	10(6A)

$TIME$ $TIMF$

DGN $REF001 $REF002 $REF003 $REF004 $REF005 $REF006
$DGNLEV $LEV001 $LEV002 $LEV003 $LEV004 $LEV005 $LEV006

PROJECT MANAGER Sherry Earley, P.E., City of Suffolk (757) 514-7703
SURVEYED BY PMI, INC. (757) 368-0945
DESIGN SUPERVISED BY Ian Johnson, P.E., Clark Nexsen (757) 455-5800
DESIGNED BY Clark Nexsen (757) 455-5800

FINAL PLANS

VDOT (Division) or Co. Name (Location), Virginia (TECHNICAL DISCIPLINE)	VDOT (Division) or Co. Name (Location), Virginia (TECHNICAL DISCIPLINE)

REVISED	STATE	STATE ROUTE	STATE PROJECT	SHEET NO.
	VA.	337	0337-133-101, PE-102 RW-202, C-502	10(7)

DESIGN FEATURES RELATING TO CONSTRUCTION OR TO REGULATION AND CONTROL OF TRAFFIC MAY BE SUBJECT TO CHANGE AS DEEMED NECESSARY BY THE DEPARTMENT

LEGEND

1. 12" DI WATER MAIN
2. 6" DI WATER MAIN (RESTRAINED MJ)
3. 8" DI SANITARY SEWER; MATCH EXISTING INVERT AND SLOPE
4. 12" BEND (45 DEGREE)
5. 12" GATE VALVE AND BOX
6. RESTRAINED MECHANICAL JOINT CAP AND BLOW-OFF
7. ADJUST EXISTING VALVE BOX
8. WATER SERVICE LINE, 3/4" TYPE K COPPER
9. FIRE HYDRANT
10. 5/8" WATER METER, SETTER, AND BOX
11. CUT AND CAP EXISTING 12" WATER MAIN
12. SANITARY SEWER LATERAL; INSTALL AT MIN. 1% SLOPE AND 36" COVER
13. SANITARY SEWER CLEANOUT
14. REMOVE EXISTING SANITARY SEWER LATERAL
15. PROVIDE 18" MINIMUM VERTICAL SEPARATION AT NEW WATER METER MAIN & EXISTING SEWER MAIN CROSSING
16. RELOCATE FIRE HYDRANT
17. ADJUST EXISTING FRAME AND COVER
18. REMOVE EXISTING 12" DI WATER MAIN
19. 20" DI OFFSET OF EXISTING WATER MAIN (CITY OF PORTSMOUTH)
20. 6" GATE VALVE AND BOX
21. 2" AIR RELEASE VALVE AND BOX (CITY OF PORTSMOUTH)
22. REMOVE EXISTING WATER METER AND BOX
23. ADJUST EXISTING SANITARY SEWER CLEANOUT
24. 12" X 6" TEE
25. CONNECT TO EXISTING SANITARY MANHOLE
26. CONNECT TO EXSITING WATER MAIN
27. REMOVE EXISTING VALVE AND BOX
28. REMOVE EXISTING 6" DI WATER MAIN
29. SANITARY MANHOLE
30. RECONNECT TO EXISTING PRIVATE WATER SERVICE LINE
31. RECONNECT TO EXISTING PRIVATE SANITARY SEWER LATERAL
32. REMOVE EXISTING SANITARY SEWER CLEANOUT
33. 6" BEND (45 DEGREE)
34. CUT AND CAP WATER SERVICE LINE AT CORPORATION STOP, CRIMP WATER SERVICE LINE, AND CLOSE CORPORATION STOP VALVE
35. REMOVE EXISTING SANITARY MANHOLE
36. REMOVE EXISTING 8" SANITARY SEWER
37. REMOVE EXISTING FIRE HYDRANT
38. FIRE HYRDRANT (RELOCATED)
39. CONNECT TO EXISTING 6" WATER MAIN
40. 8" PVC SANITARY SEWER
41. CUT-IN 2" GATE VALVE ON EXISTING 2" SANITARY FORCE MAIN AT PROPOSED RIGHT-OF-WAY
42. REMOVE EXISTING WATER SERVICE LINE
43. WATER SERVICE LINE, 1" TYPE K COPPER
44. 1" GATE VALVE W/HANDWHEEL
45. CONNECT TO EXISTING PRIVATE SANITARY SEWER FORCE MAIN

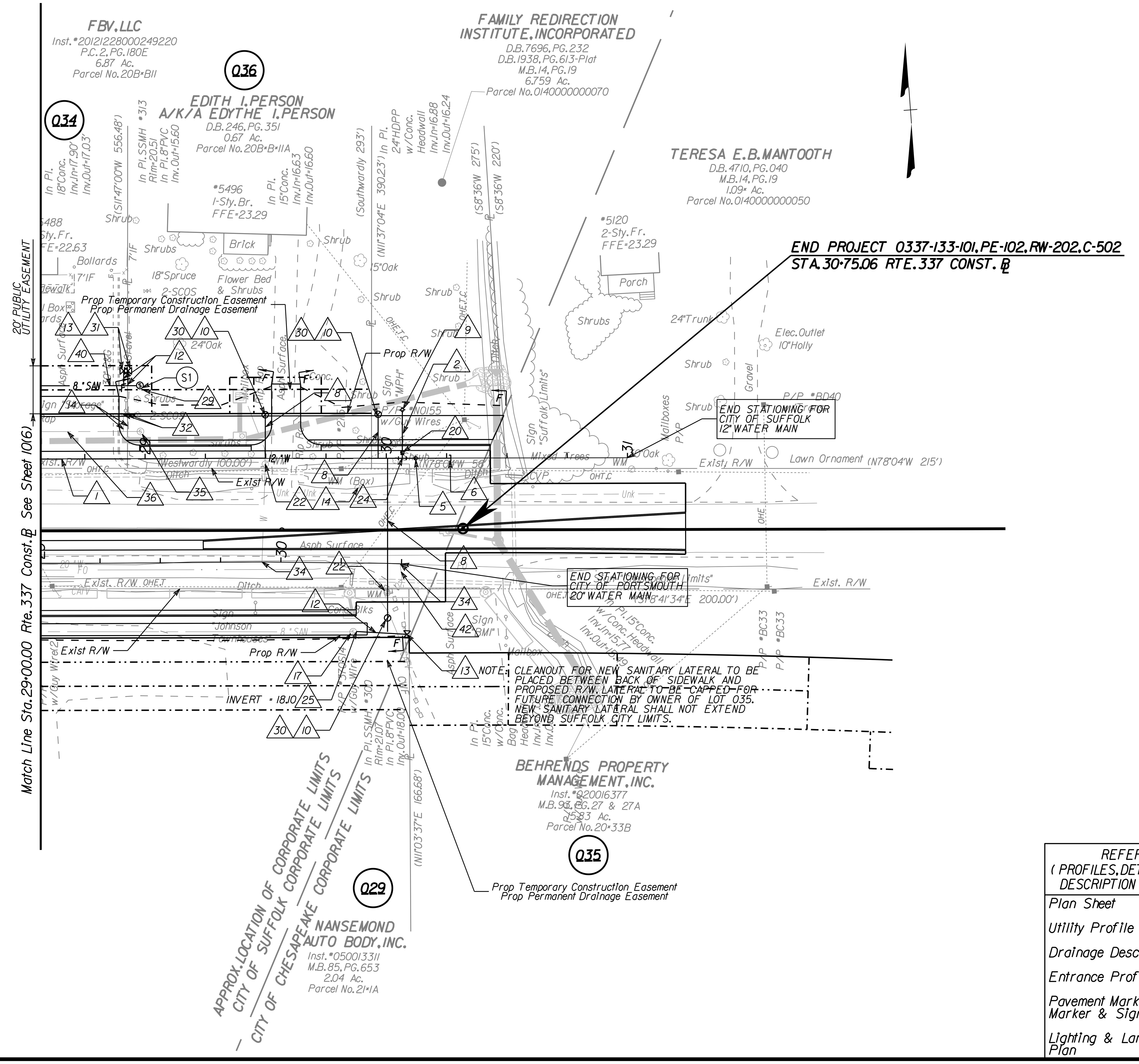

REFERENCES (PROFILES, DETAIL & DRAINAGE DESCRIPTION SHEETS, ETC.)	
Plan Sheet	7
Utility Profile	10(7A)
Drainage Descr.	2C
Entrance Profile	8(1)
Pavement Markings, Marker & Signing Plan	9(7)
Lighting & Landscape Plan	11(7)

SCALE 0 25' 50'

PROJECT	SHEET NO.
0337-133-101	10(7)

$TIME$STAMP$

d4146010(7).dgn 5/20/2016 1:36:40 PM

PROJECT MANAGER Stacey Earley, P.E., City of Suffolk (757) 514-7703
SURVEYED BY P.M.J.INC. (757) 368-0945
DESIGN SUPERVISED BY Jon Johnson, P.E., Clark Nexsen (757) 455-5800
DESIGNED BY Clark Nexsen, (757) 455-5800.

REVISED	STATE	ROUTE	STATE PROJECT	SHEET NO.
	VA.	337	0337-133-101, PE-102, RW-202, C-502	10(7A)

DESIGN FEATURES RELATING TO CONSTRUCTION OR TO REGULATION AND CONTROL OF TRAFFIC MAY BE SUBJECT TO CHANGE AS DEEMED NECESSARY BY THE DEPARTMENT

VDOT (Division) or Co. Name (Location), Virginia (TECHNICAL DISCIPLINE)

FINAL PLANS

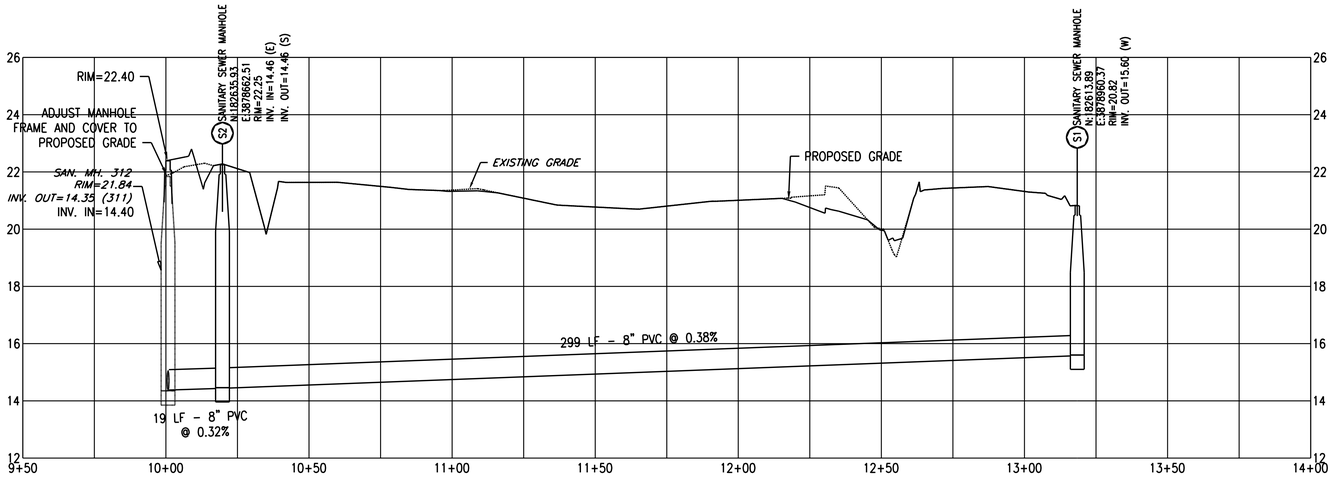

SANITARY SEWER PROFILE
SCALE: HORIZ. = 1" = 25'
VERT. = 1" = 2.5'

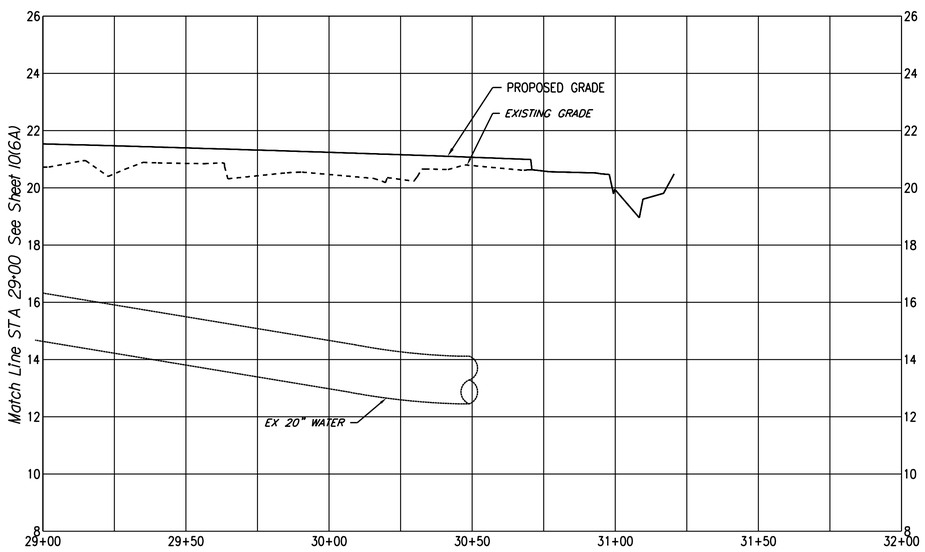

EX. 20" WATER LINE PROFILE STATION 29+00 TO 32+00
SCALE: HORIZ. = 1" = 25'
VERT. = 1" = 2.5'

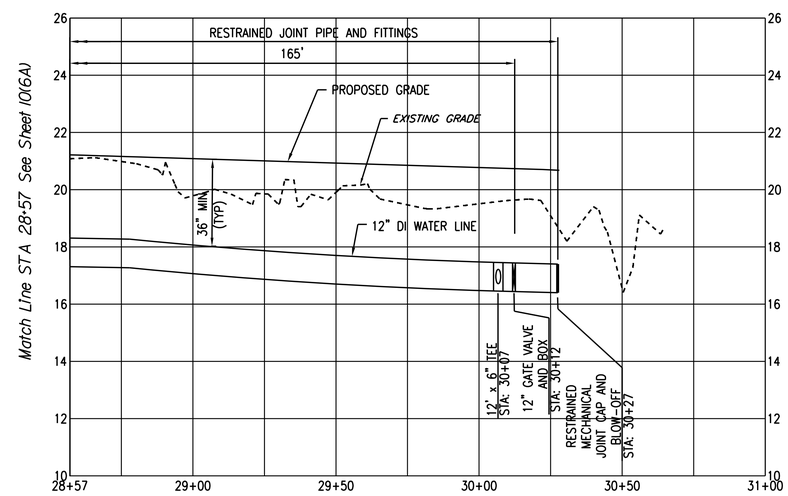

12" WATER LINE PROFILE STATION 28+57 TO 31+00
SCALE: HORIZ. = 1" = 25'
VERT. = 1" = 2.5'

STATIONS AND GRADES SHOWN ARE REFERENCED TO THE UTILITY PIPING AND NOT TO THE ROADWAY STATIONING

VERT. 1"=2.5' SCALE 0 2.5' 5' 10'
HORIZ. 1"=25' SCALE 0 25' 50'

PROJECT	SHEET NO.
0337-133-101	10(7A)

$TIME$STAMP$

PROJECT MANAGER Sherry Earley P.E. City of Suffolk (757) 514-7703
SURVEYED BY EMI INC. (757) 368-0945
DESIGN SUPERVISED BY Ian Johnston P.E. Clark Nexsen (757) 455-5800
DESIGN BY Clark Nexsen (757) 455-5800

LIGHTING & LANDSCAPE ARCHITECTURE DETAILS

REVISED	STATE	ROUTE	PROJECT	SHEET NO.
	VA.	337	0337-133-101, PE-102 RW-202, C-502	11(1)

DESIGN FEATURES RELATING TO CONSTRUCTION OR TO REGULATION AND CONTROL OF TRAFFIC MAY BE SUBJECT TO CHANGE AS DEEMED NECESSARY BY THE DEPARTMENT

VDOT (Division) or Co. Name (Location), Virginia (TECHNICAL DISCIPLINE)

VDOT (Division) or Co. Name (Location), Virginia (TECHNICAL DISCIPLINE)

FINAL PLANS

General Notes

1. All planting shall be in accordance with VDOT Road and Bridge Specifications dated January 2007, and the 2008 VDOT Road and Bridge Standards.
2. All planting and site work shall be within the right of way.
3. The planting season for the project shall be from: _____ through: _____
4. All plants must be in place by _____ in order that replacements may be made prior to _____.
5. Size of plants indicated on this summary sheet refers to size of plants delivered to the project site, not after they have been pruned.
6. Plants shall be set in the planting pit, at the proper depth, on tamped soil mix. Soil shall then be filled around the roots to approximately 75% of the depth of the pit, tamped, and thouroughly watered. After settlement of the soil, the remainder of the pit shall be filled with soil mix, fertilized, tamped, and again watered, all within the same day of planting. The same procedure shall be followed in planting replacements.
7. During the establishment period the contractor shall water each plant with the following minimum quantities of water for each watering, unless otherwise directed by the engineer.
   - (A) Deciduous tree over 10' Ht. - 12 gallons per pit
   - (B) Deciduous tree 10' Ht. or less - 6 gallons per pit
   - (C) Evergreen trees - 8 gallons per pit
   - (D) Shrubs over 18" Ht. - 2 gallons per pit
   - (E) Shrubs under 18" Ht. - 1 gallon per pit
   - (F) Ground covers and vines - 0.25 gallon per pit
   - (G) NS seed areas - 6 gallons per sq. yd.

   The Contractor shall water all living plants every 4 weeks during the period between April 1 and May 31; every 2 weeks during the period between June 1 and September 30; and every 4 weeks during the period between October 1 and November 30. For Contractor's bidding purposes, this assumes a total of 14 times for trees, shrubs and ground covers, and 4 times for NS seed areas.
8. Should the ball size exceed the minimum size given, the pit size need not be increased provided that there is sufficient space between the ball and the side of the pit to backfill and tamp properly.
9. The Engineer shall be given the opportunity to inspect and approve all plant material at its source prior to digging or delivery. If this opportunity is waived, a representative sample of each species may be required for approval prior to shipment of the total quantity.
10. Utility data has not been collected for this project. Prior to any construction, excavation, or landscaping, the contractor shall assume the responsibility of locating and verifying all utilities, above and/or below ground, public and/or private that may exist and cross through the areas of construction.
11. The Contractor shall coordinate, through the Engineer, the location and definiation of VDOT assets that may exist in the project area.
12. Major trees shall not be planted under overhead wires at any time.
13. Location of plant materials on the plans are schematic only and shall be adjusted as required for changes due to actual field conditions when directed by the Engineer.
14. On center spacing of plant material shall be indicated in the Landscape Summary or plan, unless otherwise directed by the Engineer.
15. The location of all plant material shall be staked in the field by the Contractor for approval by the Engineer prior to excavation of planting pits and/or beds and installation of any plant material.
16. All landscape areas to be mulched, except those to be seeded.
17. The mulching material for this project shall be:

    SHREDDED HARDWOOD BARK

    (See Standard 1201.07 for Mulch Specifications)
18. Definition of detail symbol: 1 / 2(A) — DETAIL NUMBER / SHEET NUMBER
19. Definition of abbreviation:

    CAL. - Caliper
    HGT. - Height
    B&B - Balled & Burlapped
    CONT. - Container
    B.R. - Bareroot
    EA. - Each
    L.F. - Linear Feet
    C.Y. - Cubic Yard
    S.F. - Square Foot
    HR - Hour
20. Planting pits for container materials shall be twice the width of the container and equal to the depth of the container.
21. All non-standard wildflower and grass seeds must adhere to specifications as stated in section 244.02(c) of the 2002 VDOT Road and Bridge Specifications manual.
22. All non-standard wildflower and grass seeding shall be completed in accordance with VDOT Specification Section 603 and in accordance with the Wildflower Plot Preparation and Planting Special Provision.
23. All non-standard ground cover planting shall be completed in accordance with VDOT Specification Section 605 and in accordance with the Ground Cover Plot Preparation and Planting Special Provision.
24. The Contractor will be responsible to satisfactorily maintain areas until the contract has been completed. Reseed when necessary and control noxious prohibited weed growth. Reseed and mulch, where mulch is required, areas that fail to show a uniform stand of vegetation. After seeding work has been satisfactorily completed, failures that have visible eroded areas shall be redressed and then reseeded, as specified for the original treatment.
25. See Roadside Development for seed mixes.

WATERING KEY	BOTANICAL NAME	COMMON NAME	PLAN NAME	QTY.	UNIT	SIZE	MIN. PIT SIZE DIAM.X DEPTH	ROOT COND.	HGT. RANGE	MIN. WIDTH SPREAD OF BRANCHING	MIN BALL DIA.	MIN. BALL DEPTH	MIN NO. RUNNERS/ STOLONS	HT. OF BRANCH ING	SPACING	ADDITIONAL REMARKS
F	Calamagrostis Acutiflora 'Karl Foerster'	Karl Foerster Feather Reed Grass	CA	668	EACH	#1	X	CONT	X	X	X	X	X	X	24" O.C.	X
A	Cornus X Rutgans	Stellar Pink Dogwood	CFR	6	EACH	2 CAL.	60x18	B&B	12'-14'	X	24"	18"	X	6'-7'	12' O.C. min	X
D	Cornus Sericea	Red Osier Dogwood	CS	32	EACH	#3	X	CONT.	X	10"	X	X	X	X	5' O.C. min.	X
D	Cornus Sericea Flavirimea	Yellow Twig Dogwood	CSF	21	EACH	#3	X	CONT.	X	10"	X	X	X	X	5' O.C. min.	X
F	Hemerocallis Stella D'Oro	Stella D'Oro Lily	H	898	EACH	#1	X	CONT.	X	X	X	X	X	X	24" O.C.	X
F	Liriope Muscari	Big Blue Lilyturf	LM	2385	EACH	#1	X	CONT.	X	X	X	X	X	X	12" O.C.	X
A	Nyssa Sylvatica	Black Tupelo	NS	7	EACH	2 CAL.	60x18	B&B	10'-12'	X	24"	18"	X	6'-7'	SEE PLAN	X
A	Tilia Americana 'Redmond'	American Linden	TA	3	EACH	2 CAL.	60x18	B&B	14'	X	24"	18"	X	6'-7'	SEE PLAN	X
D	Viburnum Carlesii	Koreanspice Viburnum	VC	27	EACH	#5	X	CONT.	X	28"	X	X	X	X	8' O.C. min	X
F	Panicum Virgatum 'Red Strainbush'	Red Rays Switchgrass	PVR	397	EACH	#1	X	CONT.	X	X	X	X	X	X	24" O.C.	X
F	Pontederia Cordata	Pickerelweed	PC	886	SY	2"		PLUGS							24" O.C.	
G	Andropogon Gerardii 'Niagra'	Niagra Big Bluestem	AG	9	LBS			SEED							NA	
G	Panicum Virgatum 'Shawnee'	Shawnee Panicgrass	PVS	6	LBS			SEED							NA	
G	Basin Floor Seed Mix A	See Specifications sheet 11(1)	--	18	LBS			SEED							NA	

MIX REQUIREMENTS THIS PROJECT

RECOMMENDATIONS FOR THE APPLICATION OF SEED MIXTURES (CORE MIX AND ADDITIVES), FERTILIZER, LIME, ETC. ARE TO BE OBTAINED FROM THE VDOT DISTRICT ROADSIDE MANAGER.

NON STANDARD MIX REQUIREMENTS THIS PROJECT

SEED MIX A - Basin Floor Seed Mix

COMMON NAME	BOTANICAL NAME	PLS SEEDING RATE lbs. Per 1,000 SF	MIN. PLS
Common Milkweed	Asclepsis syriaca	0.05	70%
Cupplant	Silphium perfoliatum	0.05	70%
Flat-top Aster	Aster umbellatus	0.05	70%
Fox Sedge	Carex vulpinoidea	0.05	70%
Maryland Senna	Senna marilandica	0.15	70%
Nodding Bur-Marigold	Bidens cernua	0.15	70%
"Riverbank" Wild Rye	Elymus riparius	0.05	70%
"Shelter" Switchgrass	Panicum virgatum "Shelter"	0.25	80%
Silky Wild Rye	Elymus villosus	0.05	70%
Spotted Joe Pye Weed	Eupatorium maculatum	0.05	80%
Tioga Deertongue	Panicum clandestinum	0.05	80%
Wild Bergamot	Monarda fistulosa	0.05	80%

Seed Mix B Rate of Application = 1 lb Per 1,000 SF
See Plan Sheet: 11(5)

ITEM: 9804 - 0022 - SEED PVS - Panicum Virgatum

COMMON NAME	BOTANICAL NAME	PLS SEEDING RATE lbs. Per 1000 SF	MIN. PLS
Shawnee Switchgrass	Panicum virgatum Shawnee	1	100%

Seed PVS Rate of Application = 1 lbs. Per 1000 square feet
See Plan Sheet: 11(5)

ITEM: SEED AG - Andropogon gerardii "Niagara"

COMMON NAME	BOTANICAL NAME	PLS SEEDING RATE lbs. Per 1000 SF	MIN. PLS
"Niagara" Big Bluestem	Andropogon gerardii "Niagara"	1	100%

Seed AG Rate of Application = 1 lbs. Per 1000 square feet
See Plan Sheet: 11(5)

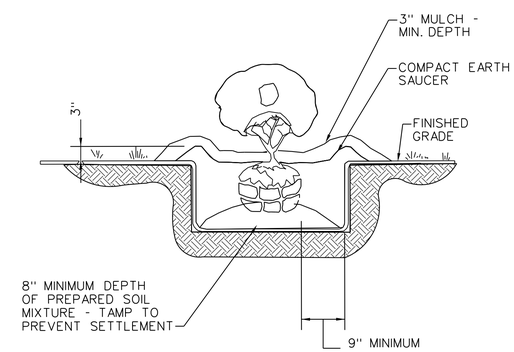

SHRUB PLANTING DETAIL

NO SCALE

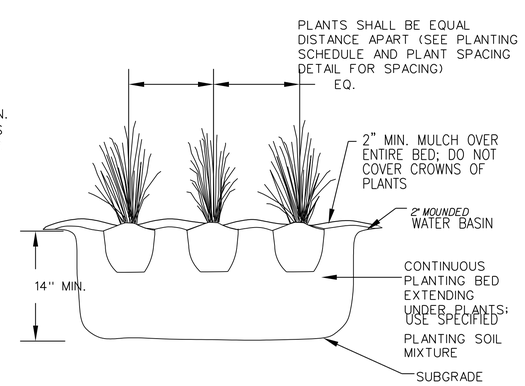

GROUNDCOVER PLANTING DETAIL

NO SCALE

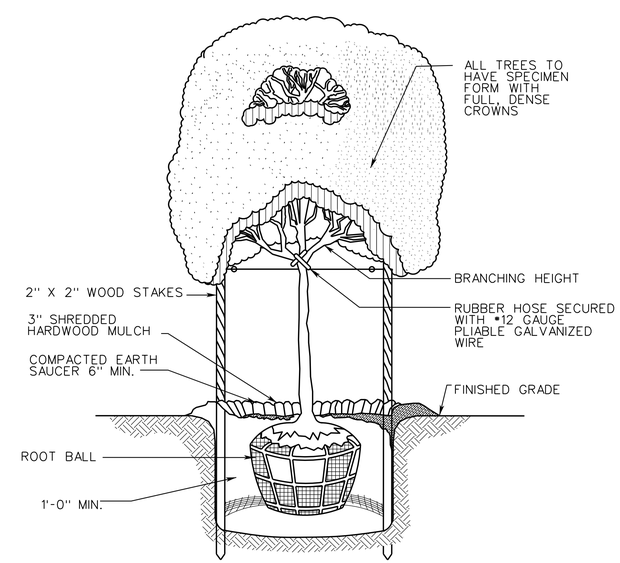

TREE PLANTING DETAIL

NO SCALE

PROJECT	SHEET NO.
0337-133-101	11(1)

PROJECT MANAGER Sherry Earley, P.E., City of Suffolk (757) 514-7703
SURVEYED BY EMI, INC. (757) 368-0945
DESIGN SUPERVISED BY Ina Johnston, P.E., Clark Nexsen (757) 455-5800
DESIGN BY Clark Nexsen (757) 455-5800

FINAL PLANS

REVISED	STATE	ROUTE	PROJECT	SHEET NO.
	VA.	337	0337-133-101, PE-102 RW-202, C-502	11(3)

DESIGN FEATURES RELATING TO CONSTRUCTION OR TO REGULATION AND CONTROL OF TRAFFIC MAY BE SUBJECT TO CHANGE AS DEEMED NECESSARY BY THE DEPARTMENT

VDOT (Division) or Co. Name (Location), Virginia (TECHNICAL DISCIPLINE)	VDOT (Division) or Co. Name (Location), Virginia (TECHNICAL DISCIPLINE)

POLE SHALL HAVE AN EPA RATING GREATER THAN OR EQUAL TO THE SUM OF ALL FIXTURES MOUNTED TO IT AT A WIND RATING OF 110mph WITH A 1.3 GUST FACTOR

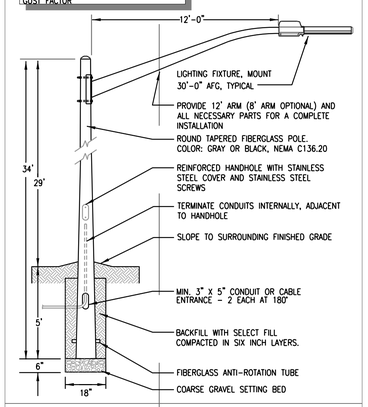

FIBERGLASS POLE WITH DIRECT BURIED POLE BASE DETAIL

STREET LIGHTING

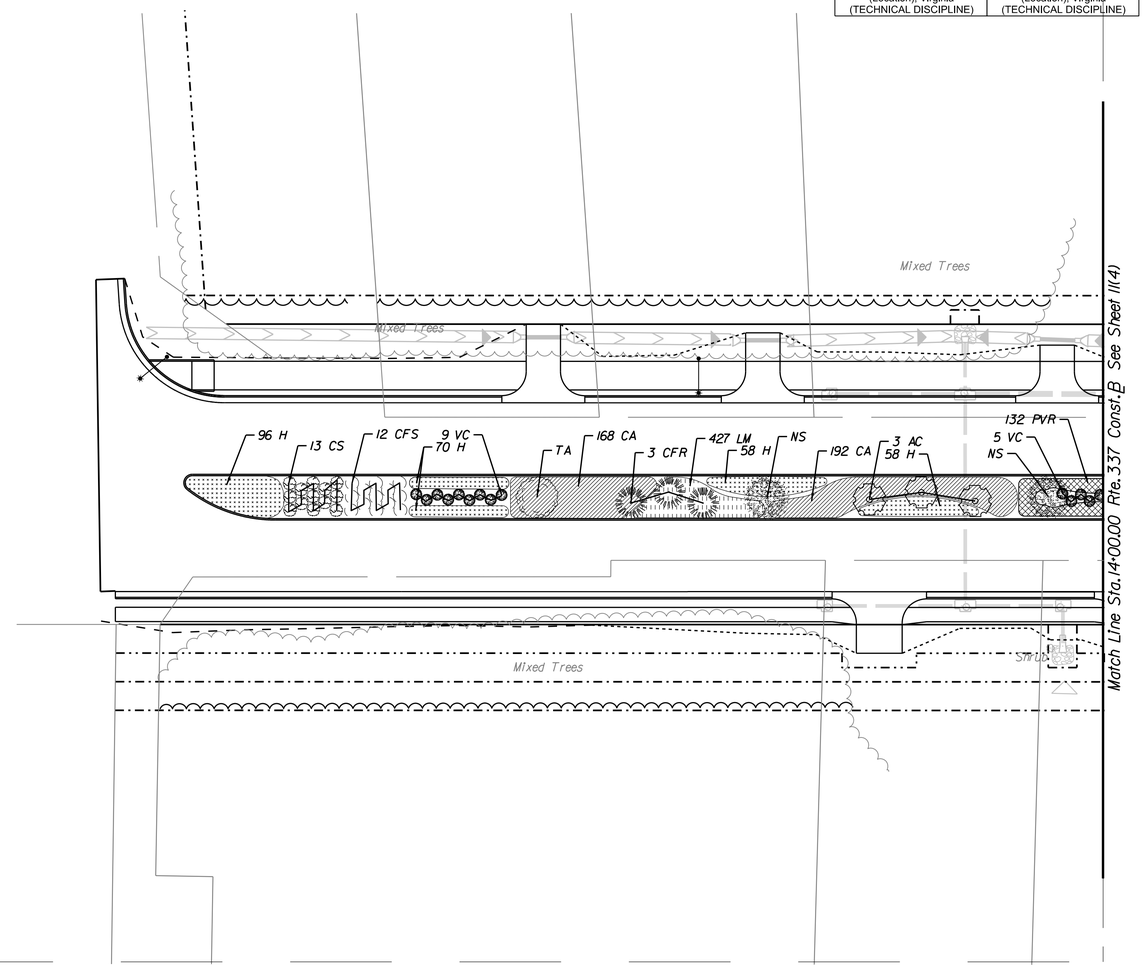

LANDSCAPING LEGEND

CA - Calamagrostis Acutiflora 'Karl Foerster' / Karl Foerster Feather Reed Grass
CFR - Cornus X Rutgans / Stellar Pink Dogwood
CS - Cornus Sericea / Red Osier Dogwood
CSF - Cornus Sericea Flavirimea / Yellow Twig Dogwood
H - Hemerocallis Stella D'Oro / Stella D'Oro Lily
LM - Liriope Muscari / Big Blue Lilyturf
NS - Nyssa Sylvatica / Black Tupelo
PVR - Panicum Virgatum 'Rofstrahbustt/Red Rays Switchgrass
TA - Tilia Americana 'Redmond' / American Linden
VC - Viburnum Carlesii / Koreanspice Viburnum
AG - Andropogon Gerardii 'Nigra' / Niagra Big Bluestem
PVS - Panicum Virgatum 'Shawnee' / Shawnee Panicgrass

LIGHTING LEGEND

Direct buried, fiberglass pole with enclosed flat lens luminaire, type III distribution, 250W HPS, mounted at 30'-0" above finished pavement on 12'-0" long arm.

REFERENCES
(PROFILES, DETAIL & DRAINAGE DESCRIPTION SHEETS, ETC.)

Mainline Plan	3
Drainage Descr.	2C
Entrance Profile	8(1)
Pavement Markings	9(3)
Utility Plan	10(3)
Landscape Details	11(1)

SCALE 0 25' 50'

PROJECT	SHEET NO.
0337-133-101	11(3)

$TIME$STAMP$

PROJECT MANAGER Sherry Earley, P.E., City of Suffolk (757) 514-7703
SURVEYED BY EMI, INC. (757) 368-0945
DESIGN SUPERVISED BY Ian Johnston, P.E., Clark Nexsen (757) 455-5800
DESIGNED BY Clark Nexsen (757) 455-5800

FINAL PLANS

VDOT (Division) or Co. Name (Location), Virginia (TECHNICAL DISCIPLINE)	VDOT (Division) or Co. Name (Location), Virginia (TECHNICAL DISCIPLINE)

REVISED	STATE	ROUTE	PROJECT	SHEET NO.
	VA.	337	0337-133-101, PE-102 RW-202, C-502	11(4)

DESIGN FEATURES RELATING TO CONSTRUCTION OR TO REGULATION AND CONTROL OF TRAFFIC MAY BE SUBJECT TO CHANGE AS DEEMED NECESSARY BY THE DEPARTMENT

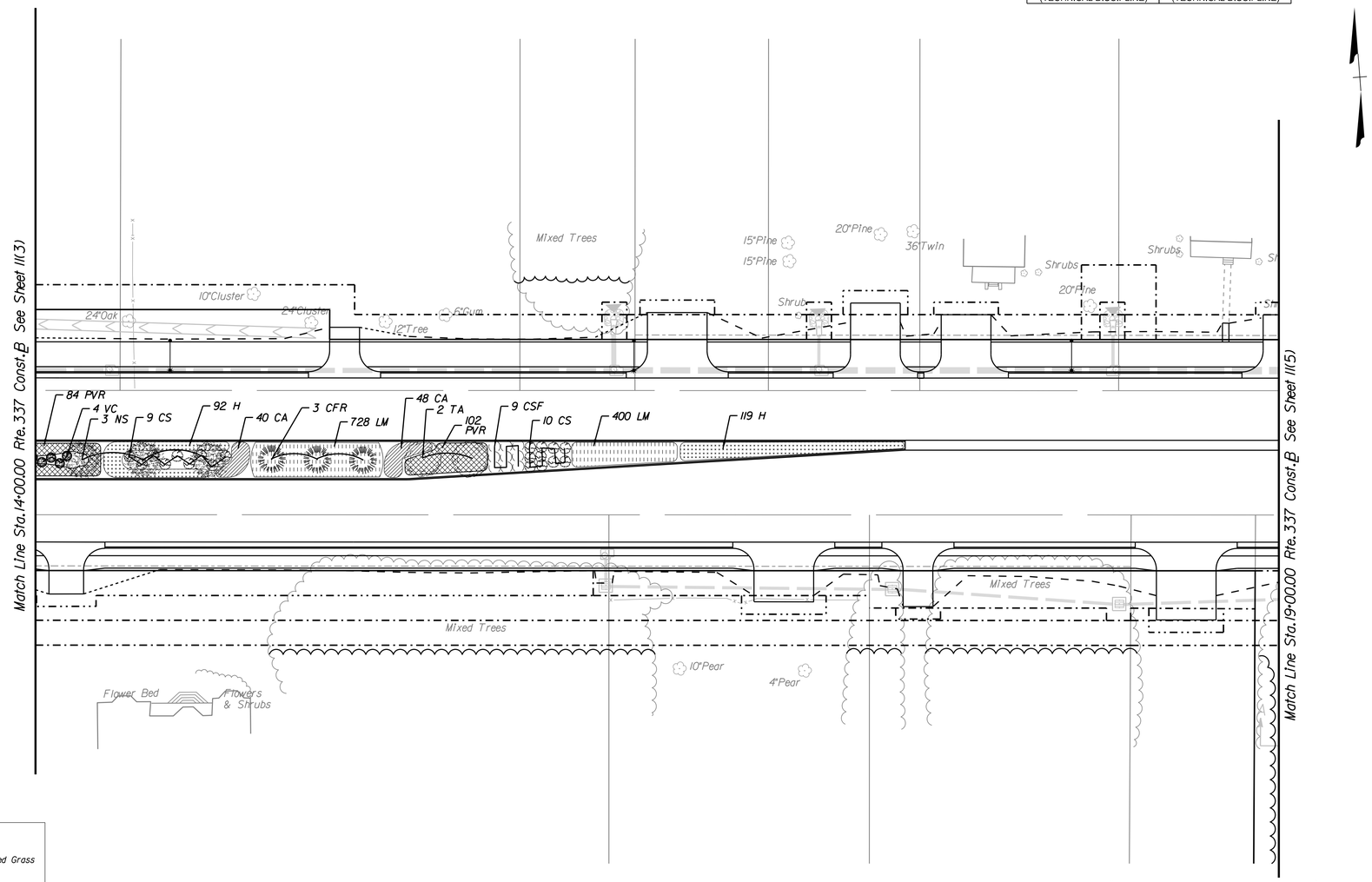

LANDSCAPING LEGEND

CA - Calamagrostis Acutiflora 'Karl Foerster' / Karl Foerster Feather Reed Grass
CFR - Cornus X Rutgans / Stellar Pink Dogwood
CS - Cornus Sericea / Red Osier Dogwood
CSF - Cornus Sericea Flaviriimea / Yellow Twig Dogwood
H - Hemerocallis Stella D'Oro / Stella D'Oro Lily
LM - Liriope Muscari / Big Blue Lilyturf
NS - Nyssa Sylvatica / Black Tupelo
PVR - Panicum Virgatum 'Rofstrahlbusht'/Red Rays Switchgrass
TA - Tilia Americana 'Redmond' / American Linden
VC - Viburnum Carlesii / Koreanspice Viburnum
AG - Andropogon Gerardii 'Nigra' / Niagra Big Bluestem
PVS - Panicum Virgatum 'Shownee' / Shownee Panicgrass

LIGHTING LEGEND

Direct burled, fiberglass pole with enclosed flat lens luminaire, type III distribution, 250W HPS, mounted at 30'-0" above finished pavement on 12'-0" long arm.

REFERENCES
(PROFILES, DETAIL & DRAINAGE DESCRIPTION SHEETS, ETC.)

Mainline Plan	4
Drainage Descr.	2C
Entrance Profile	8(1)
Pavement Markings	9(4)
Utility Plan	10(4)
Landscape Details	11(1)

SCALE
0 25' 50'

PROJECT	SHEET NO.
0337-133-101	11(4)

$TIME$ $STAMP$

DGN $REF001 $REF002 $REF003 $REF004 $REF005 $REF006
$DGNLEV $LEV001 $LEV002 $LEV003 $LEV004 $LEV005 $LEV006

PROJECT MANAGER Sherry Earley, P.E., City of Suffolk (757) 514-7703
SURVEYED BY EMI, INC. (757) 368-0945
DESIGN SUPERVISED BY Ian Johnston, P.E., Clark Nexsen (757) 455-5800
DESIGNED BY Clark Nexsen (757) 455-5800

FINAL PLANS

VDOT (Division) or Co. Name (Location), Virginia (TECHNICAL DISCIPLINE)	VDOT (Division) or Co. Name (Location), Virginia (TECHNICAL DISCIPLINE)

REVISED	STATE	ROUTE	PROJECT	SHEET NO.
	VA.	337	0337-133-101, PE-102 RW-202, C-502	11(5)

DESIGN FEATURES RELATING TO CONSTRUCTION OR TO REGULATION AND CONTROL OF TRAFFIC MAY BE SUBJECT TO CHANGE AS DEEMED NECESSARY BY THE DEPARTMENT

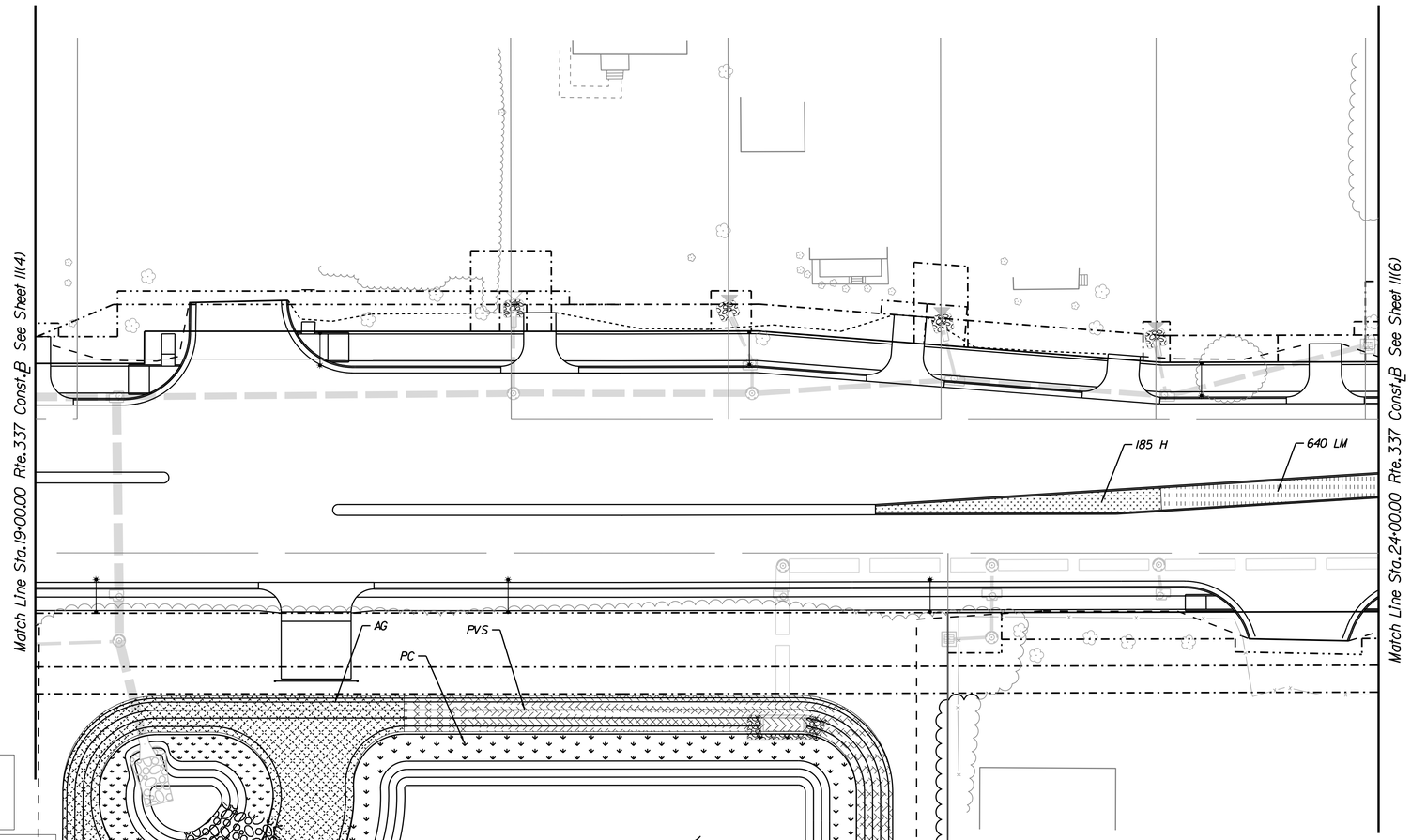

LIGHTING LEGEND

Direct buried, fiberglass pole with enclosed flat lens luminaire, type III distribution, 250W HPS, mounted at 30'-0" above finished pavement on 12'-0" long arm.

LANDSCAPING LEGEND

CA - Calamogrostis Acutiflora 'Karl Foerster' / Karl Foerster Feather Reed Grass
CFR - Cornus X Rutgans / Stellar Pink Dogwood
CS - Cornus Sericea / Red Osier Dogwood
CSF - Cornus Sericea Flaviriimea / Yellow Twig Dogwood
H - Hemerocallis Stella D'Oro / Stella D'Oro Lily
LM - Liriope Muscari / Big Blue Lilyturf
NS - Nyssa Sylvatica / Black Tupelo
PVR - Panicum Virgatum "Rofstrahlbustt/Red Rays Switchgrass
TA - Tilia Americana 'Redmond' / American Linden
VC - Viburnum Carlesii / Koreanspice Viburnum
AG - Andropogon Gerardii 'Nigra' / Niagra Big Bluestem
PVS - Panicum Virgatum 'Shawnee' / Shawnee Panicgrass
PC - Pontederia Cordata / Pickerelweed

REFERENCES (PROFILES, DETAIL & DRAINAGE DESCRIPTION SHEETS, ETC.)	
Mainline Plan	5
Drainage Descr.	2C
Entrance Profile	8(1)
Pavement Markings	9(5)
Utility Plan	10(5)
Landscape Details	11(1)

SCALE 0 25' 50'

PROJECT	SHEET NO.
0337-133-101	11(5)

$TIME$STAMP$

d4146011(5).dgn 5/20/2016 1:36:45 PM

PROJECT MANAGER Sherry Earley, P.E., City of Suffolk (757) 514-7703
SURVEYED BY EMI, INC. (757) 368-0945
DESIGN SUPERVISED BY Ian Johnston, P.E., Clark Nexsen (757) 455-5800
DESIGNED BY Clark Nexsen (757) 455-5800

FINAL PLANS

VDOT (Division) or Co. Name (Location), Virginia (TECHNICAL DISCIPLINE)	VDOT (Division) or Co. Name (Location), Virginia (TECHNICAL DISCIPLINE)

REVISED	STATE	ROUTE	PROJECT	SHEET NO.
	VA.	337	0337-133-101, PE-102 RW-202, C-502	11(6)

DESIGN FEATURES RELATING TO CONSTRUCTION OR TO REGULATION AND CONTROL OF TRAFFIC MAY BE SUBJECT TO CHANGE AS DEEMED NECESSARY BY THE DEPARTMENT

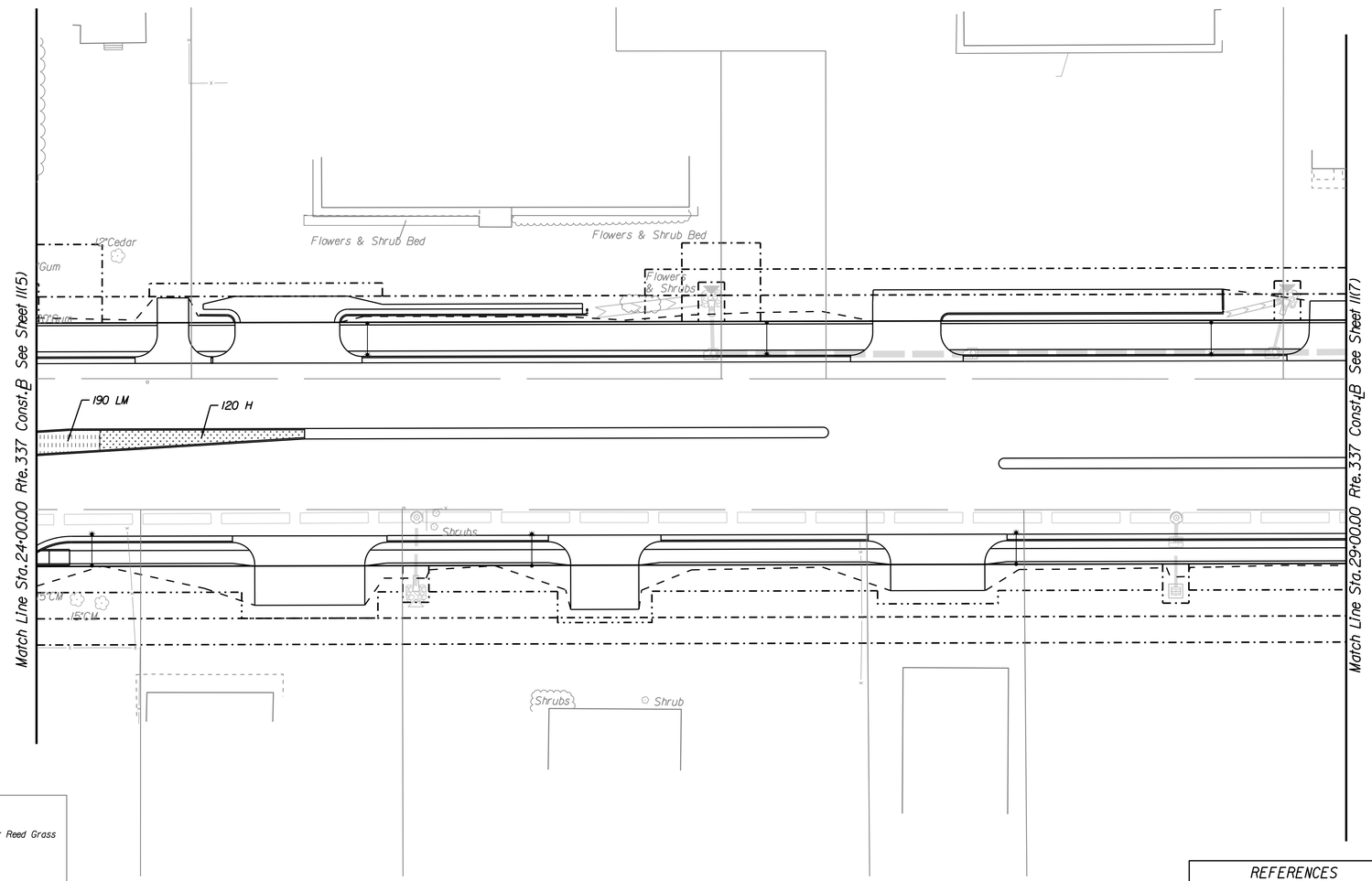

LANDSCAPING LEGEND

CA - Calamagrostis Acutiflora 'Karl Foerster' / Karl Foerster Feather Reed Grass
CFR - Cornus X Rutgans / Stellar Pink Dogwood
CS - Cornus Sericea / Red Osier Dogwood
CSF - Cornus Sericea Flavirimea / Yellow Twig Dogwood
H - Hemerocallis Stella D'Oro / Stella D'Oro Lily
LM - Liriope Muscari / Big Blue Lilyturf
NS - Nyssa Sylvatica / Black Tupelo
PVR - Panicum Virgatum 'Rotstrahlbusch'/Red Rays Switchgrass
T.A - Tilia Americana 'Redmond' / American Linden
VC - Viburnum Carlesii / Koreanspice Viburnum
AG - Andropogon Gerardii 'Nigra' / Niagra Big Bluestem
PVS - Panicum Virgatum 'Shownee' / Shownee Panicgrass

LIGHTING LEGEND

Direct buried, fiberglass pole with enclosed flat lens luminaire, type III distribution, 250W HPS, mounted at 30'-0" above finished pavement on 12'-0" long arm.

REFERENCES
(PROFILES, DETAIL & DRAINAGE DESCRIPTION SHEETS, ETC.)

Mainline Plan	6
Drainage Descr.	2C
Entrance Profile	8(1)
Pavement Markings	9(6)
Utility Plan	10(6)
Landscape Details	11(1)

SCALE
0 25' 50'

PROJECT	SHEET NO.
0337-133-101	11(6)

$TIME$STAMP$

PROJECT MANAGER Sherry Earley, P.E., City of Suffolk (757) 514-7703
SURVEYED BY EMI, INC. (757) 368-0945
DESIGN SUPERVISED BY Ian Johnston, P.E., Clark Nexsen (757) 455-5800
DESIGNED BY Clark Nexsen (757) 455-5800

FINAL PLANS

VDOT (Division) or Co. Name (Location), Virginia (TECHNICAL DISCIPLINE)	VDOT (Division) or Co. Name (Location), Virginia (TECHNICAL DISCIPLINE)

REVISED	STATE	ROUTE	PROJECT	SHEET NO.
	VA.	337	0337-133-101, PE-102 RW-202, C-502	11(7)

DESIGN FEATURES RELATING TO CONSTRUCTION OR TO REGULATION AND CONTROL OF TRAFFIC MAY BE SUBJECT TO CHANGE AS DEEMED NECESSARY BY THE DEPARTMENT

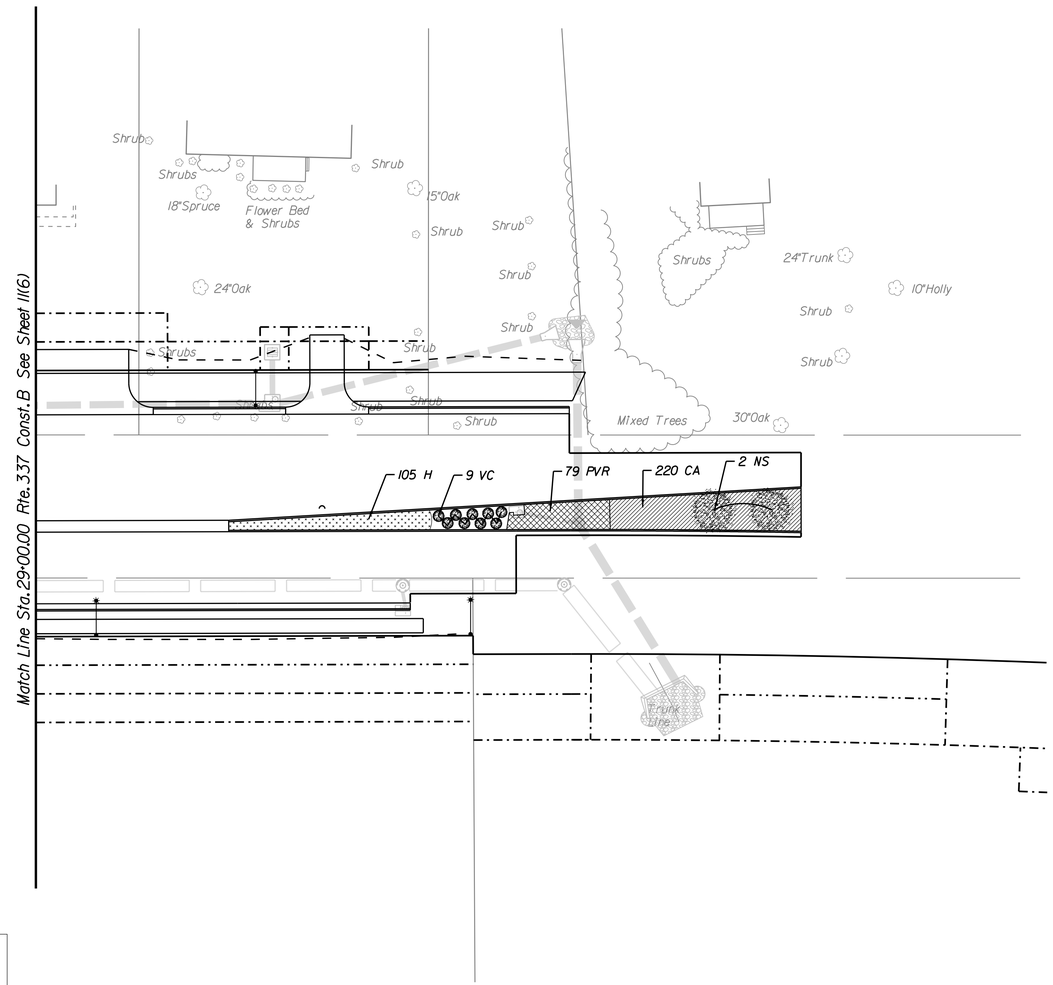

LANDSCAPING LEGEND

CA - Calamogrostis Acutiflora 'Karl Foerster' / Karl Foerster Feather Reed Grass
CFR - Cornus X Rutgans / Stellar Pink Dogwood
CS - Cornus Sericea / Red Oster Dogwood
CSF - Cornus Sericea Flaviriimea / Yellow Twig Dogwood
H - Hemerocallis Stella D'Oro / Stella D'Oro Lily
LM - Liriope Muscari / Big Blue Lilyturf
NS - Nyssa Sylvatica / Black Tupelo
PVR - Panicum Virgatum 'Rafstrahlbusth'/Red Rays Switchgrass
TA - Tilia Americana 'Redmond' / American Linden
VC - Viburnum Carlesii / Koreanspice Viburnum
AG - Andropogon Gerardii 'Nigra' / Niagra Big Bluestem
PVS - Panicum Virgatum 'Shawnee' / Shawnee Panicgrass

LIGHTING LEGEND

Direct buried, fiberglass pole with enclosed flat lens luminaire, type III distribution, 250W HPS, mounted at 30'-0" above finished pavement on 12'-0" long arm.

REFERENCES
(PROFILES, DETAIL & DRAINAGE DESCRIPTION SHEETS, ETC.)

Mainline Plan	7
Drainage Descr.	2C
Entrance Profile	8(1)
Pavement Markings	9(7)
Utility Plan	10(7)
Landscape Details	11(1)

SCALE 0 25' 50'

PROJECT	SHEET NO.
0337-133-101	11(7)

$TIME$ $TIMF$