SHEET INDEX

NO.	DESCRIPTION
1	TITLE SHEET
1A	ALIGNMENT DATA
1B	RIGHT OF WAY DATA
2	GENERAL NOTES
2A	TYPICAL SECTIONS
3	EXISTING CONDITIONS
3A	ROADWAY PLAN AND PROFILE

CITY OF SUFFOLK REALIGNMENT OF COLONIAL AVENUE

SUFFOLK, VA

State Project Number: U000-133-R89 (UPC 107264)
From: Grove Avenue
To: Northbrook Avenue

PLAN STATUS

DATE	INITIAL	DESCRIPTION
07/01/16	APF	PRELIMINARY DESIGN (30%)

ROADWAY DESIGN CRITERIA

FUNCTIONAL CLASSIFICATION: URBAN LOCAL STREET (GS-8)
DESIGN SPEED: 25 MPH

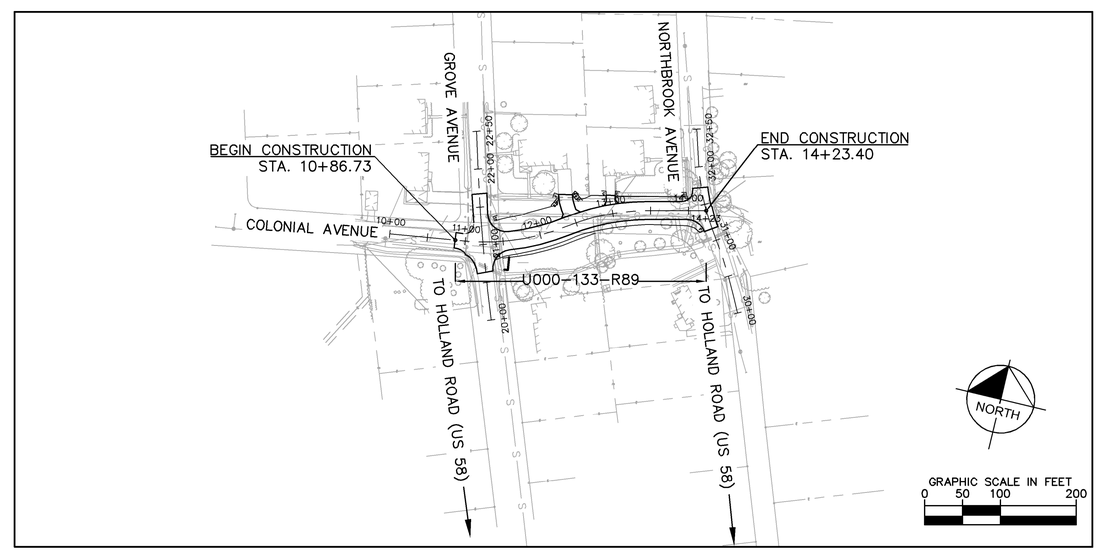

UTILITY AND GOVERNING AGENCIES CONTACT LIST

GAS
VIRGINIA NATURAL GAS
544 S. INDEPENDENCE BLVD.
VIRGINIA BEACH, VIRGINIA 23452
(757) 616-7529
CONTACT: KEVIN STARKE

ELECTRIC
DOMINION VIRGINIA POWER
(252) 331-6148
CONTACT: BOBBY WOOD

TELEPHONE/COMMUNICATIONS
VERIZON
2920 ELMHURST LANE
2ND FLOOR
PORTSMOUTH, VIRGINIA 23701
(757) 663-6721
CONTACT: JIM FULTON

PUBLIC UTILITIES
CITY OF SUFFOLK
442 W. WASHINGTON STREET
SUFFOLK, VIRGINIA 23434
(757) 514-7019
CONTACT: STEWART LASSITER

PUBLIC WORKS
CITY OF SUFFOLK
442 W. WASHINGTON STREET
SUFFOLK, VIRGINIA 23434
(757) 514-7703
CONTACT: SHERRY EARLEY

MISS UTILITY *
MISS UTILITY OF VIRGINIA
204 RIVERS BEND BOULEVARD
CHESTER, VIRGINIA 23831
CONTACT NUMBER: 811

* CONTRACTOR TO NOTIFY MISS UTILITY 72 HOURS PRIOR TO ANY EXCAVATION, AS REQUIRED BY LAW.

THE COMPLETE ELECTRONIC PDF VERSION OF THE PLAN ASSEMBLY AS AWARDED HAS BEEN SEALED AND SIGNED USING DIGITAL SIGNATURES AND THE OFFICIAL PLAN ASSEMBLY IN ELECTRONIC FORMAT IS STORED IN THE VDOT CENTRAL OFFICE PLAN LIBRARY, INCLUDING ALL SUBSEQUENT REVISIONS, WILL BE THE OFFICIAL CONSTRUCTION PLANS. FOR INFORMATION RELATIVE TO ELECTRONIC FILES AND LAYERED PLANS, SEE THE GENERAL NOTES.

DESIGN FEATURES RELATING TO CONSTRUCTION OR TO REGULATION AND CONTROL OF TRAFFIC MAY BE SUBJECT TO CHANGE AS DEEMED NECESSARY BY THE CITY.

THIS PROJECT IS TO BE CONSTRUCTED IN ACCORDANCE WITH THE DEPARTMENT'S 2016 ROAD AND BRIDGE SPECIFICATIONS, 2008 ROAD AND BRIDGE STANDARDS, 2009 MUTCD, 2011 VIRGINIA SUPPLEMENT TO THE MUTCD, 2011 VIRGINIA WORK AREA PROTECTION MANUAL AND AS AMENDED BY CONTRACT PROVISIONS AND THE COMPLETE ELECTRONIC PDF VERSION OF THE PLAN ASSEMBLY.

THE ORIGINAL APPROVED TITLE SHEET(S), INCLUDING ORIGINAL SIGNATURES, ARE FILED IN THE VDOT CENTRAL OFFICE PLAN LIBRARY. ANY MISUSE OF ELECTRONIC FILES, INCLUDING SCANNED SIGNATURES, IS ILLEGAL AND ENFORCED TO THE FULL EXTENT OF THE LAW.

SURVEYOR:
PRECISION MEASUREMENTS, INC.
851 SEAHAWK CIRCLE
SUITE 103
VIRGINIA BEACH, VIRGINIA 23452
TEL. (757) 368-0945
FAX (757) 368-9375
CONTACT: RICHARD THOMAS, LS

811 Know what's below. Call before you dig.

ENGINEER:
KIMLEY-HORN AND ASSOCIATES, INC.
4500 MAIN STREET
SUITE 500
VIRGINIA BEACH, VIRGINIA 23462
TEL. (757) 213-8600
FAX (757) 213-8601
CONTACT: ANDREW FARTHING, P.E.

LOCALLY ADMINISTERED PROJECTS
CITY OF SUFFOLK

RECOMMENDED FOR APPROVAL FOR RIGHT OF WAY ACQUISTION

DATE — DIRECTOR OF PUBLIC WORKS

RECOMMENDED FOR APPROVAL FOR CONSTRUCTION

DATE — DIRECTOR OF PUBLIC WORKS

No.	REVISIONS	DATE

Kimley»Horn
© 2016 KIMLEY-HORN AND ASSOCIATES, INC.
4500 MAIN STREET, SUITE 500, VIRGINIA BEACH, VA 23462
PHONE: 757-213-8600 FAX: 757-213-8601
WWW.KIMLEY-HORN.COM

Kimley-Horn and Associates, Inc.
Virginia Beach, Virginia
Roadway Engineer

KHA PROJECT 117019024
DATE 07/01/2016
SCALE AS SHOWN
DESIGNED BY APF
DRAWN BY DFL
CHECKED BY WFM

TITLE SHEET

REALIGNMENT OF COLONIAL AVENUE

SUFFOLK VA

SHEET NUMBER
1

Plotted By:Lynch, Dillon Layout:1 July 05, 2016 09:30:33am K:\VAS RDW\117019024 - Colonial Ave\CADD\PlanSheets\1 TITLE SHEET.dwg
This document, together with the concepts and designs presented herein, as an instrument of service, is intended only for the specific purpose and client for which it was prepared. Reuse of and improper reliance on this document without written authorization and adaptation by Kimley-Horn and Associates, Inc. shall be without liability to Kimley-Horn and Associates, Inc.

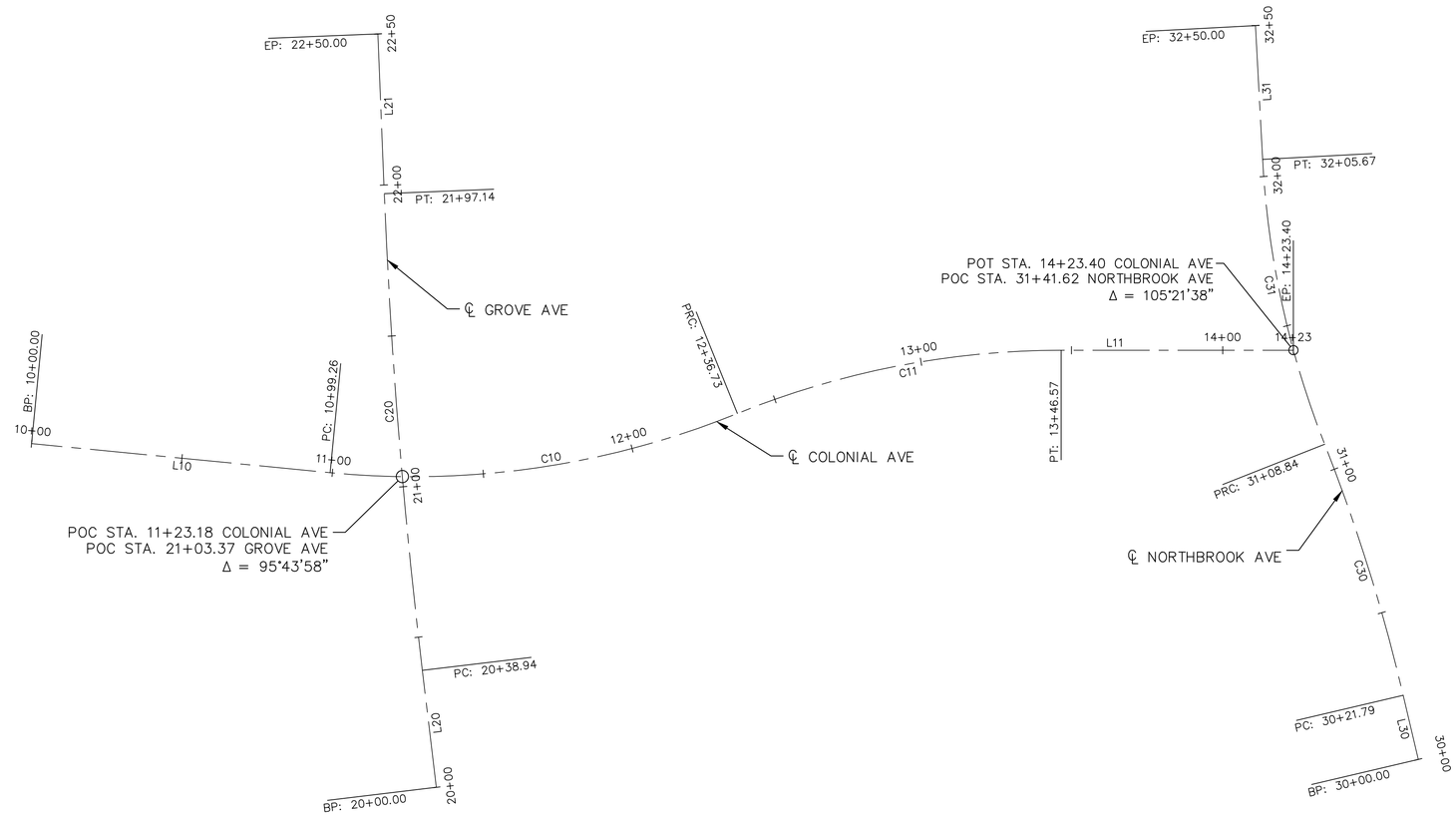

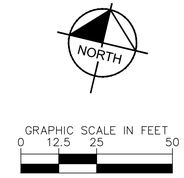

ALIGNMENT COLONIAL AVE LAYOUT DATA														
NO.	BEGIN STATION	BEGIN NORTHING	BEGIN EASTING	LENGTH	END STATION	END NORTHING	END EASTING	TANGENT BEARING	CHORD BEARING	CHORD LENGTH	PI STATION	DELTA	TANGENT	RADIUS
L10	10+00.00	3428786.74	12027334.90	99.26'	10+99.26	3428800.45	12027433.21	N82° 03' 46.18"E	N/A	N/A	N/A	N/A	N/A	N/A
C10	10+99.26	3428800.45	12027433.21	137.47'	12+36.73	3428850.91	12027559.65	N/A	N68° 14' 40.13"E	136.14'	11+69.36	Δ 27.6367	70.10	285
C11	12+36.73	3428850.91	12027559.65	109.84'	13+46.57	3428896.23	12027658.95	N/A	N65° 27' 59.25"E	109.15'	12+92.34	Δ 22.0806	55.61	285
L11	13+46.57	3428896.23	12027658.95	76.83'	14+23.40	3428914.16	12027733.66	N76° 30' 24.41"E	N/A	N/A	N/A	N/A	N/A	N/A

ALIGNMENT GROVE AVE LAYOUT DATA														
NO.	BEGIN STATION	BEGIN NORTHING	BEGIN EASTING	LENGTH	END STATION	END NORTHING	END EASTING	TANGENT BEARING	CHORD BEARING	CHORD LENGTH	PI STATION	DELTA	TANGENT	RADIUS
L20	20+00.00	3428707.46	12027491.66	38.94'	20+38.94	3428743.97	12027478.13	N20° 19' 29.99"W	N/A	N/A	N/A	N/A	N/A	N/A
C20	20+38.94	3428743.97	12027478.13	158.20'	21+97.14	3428894.34	12027429.10	N/A	N18° 03' 32.27"W	158.16'	21+18.08	Δ 4.5321	79.14	2000
L21	21+97.14	3428894.34	12027429.10	52.86'	22+50.00	3428945.20	12027414.72	N15° 47' 34.56"W	N/A	N/A	N/A	N/A	N/A	N/A

ALIGNMENT NORTHBROOK AVE LAYOUT DATA														
NO.	BEGIN STATION	BEGIN NORTHING	BEGIN EASTING	LENGTH	END STATION	END NORTHING	END EASTING	TANGENT BEARING	CHORD BEARING	CHORD LENGTH	PI STATION	DELTA	TANGENT	RADIUS
L30	30+00.00	3428792.24	12027805.42	21.79'	30+21.79	3428811.71	12027795.62	N26° 43' 36.08"W	N/A	N/A	N/A	N/A	N/A	N/A
C30	30+21.79	3428811.71	12027795.62	87.05'	31+08.84	3428886.34	12027750.98	N/A	N30° 52' 57.99"W	86.97'	30+65.39	Δ 8.3122	43.60	600
C31	31+08.84	3428886.34	12027750.98	96.83'	32+05.67	3428973.15	12027709.03	N/A	N25° 47' 31.30"W	96.41'	31+57.68	Δ 18.4937	48.84	300
L31	32+05.67	3428973.15	12027709.03	44.33'	32+50.00	3429015.65	12027696.41	N16° 32' 42.70"W	N/A	N/A	N/A	N/A	N/A	N/A

No.	REVISIONS	DATE

Kimley»Horn

© 2016 KIMLEY-HORN AND ASSOCIATES, INC.
4500 MAIN STREET, SUITE 500, VIRGINIA BEACH, VA 23462
PHONE: 757-213-8600 FAX: 757-213-8601
WWW.KIMLEY-HORN.COM

Kimley-Horn and Associates, Inc.
Virginia Beach, Virginia
Roadway Engineer

KHA PROJECT 117019024
DATE 07/01/2016
SCALE AS SHOWN
DESIGNED BY APF
DRAWN BY DFL
CHECKED BY WFM

ALIGNMENT DATA

REALIGNMENT OF COLONIAL AVENUE

SUFFOLK VA

SHEET NUMBER
1A

This document, together with the concepts and designs presented herein, as an instrument of service, is intended only for the specific purpose and client for which it was prepared. Reuse of and improper reliance on this document without written authorization and adaptation by Kimley-Horn and Associates, Inc. shall be without liability to Kimley-Horn and Associates, Inc.

PARCEL NO.	LANDOWNER	SHEET NO.	AREA								
			TOTAL	FEE TAKING	FEE REMAINDER	EASEMENTS					
						PERMANENT	DRAINAGE	PERM. SLOPES	TEMP. ENTRANCE	TEMP. CONST.	PROFFERS
			ACRES	ACRES	ACRES	ACRES	ACRES	ACRES	ACRES	ACRES	YES/NO
1	M.S. Epperson, III	3A	0.288	0.000	0.288	0	0	0	0	0	NO
2	Thomas B. Johnson	3A	0.255	0.000	0.255	0	0	0	0	0	NO
3	Seaboard Enterprises, L.L.C.	3A	0.247	0.061	0.186	0	0.002	0	0	0	NO
4	Raymond E. Holmes, Jr.	3A	0.204	0.000	0.204	0	0	0	0	0	NO

No.	REVISIONS	DATE

Kimley»Horn

© 2016 KIMLEY-HORN AND ASSOCIATES, INC.
4500 MAIN STREET, SUITE 500, VIRGINIA BEACH, VA 23462
PHONE: 757-213-8600 FAX: 757-213-8601
WWW.KIMLEY-HORN.COM

Kimley-Horn and Associates, Inc.
Virginia Beach, Virginia
Roadway Engineer

KHA PROJECT 117019024
DATE 07/01/2016
SCALE AS SHOWN
DESIGNED BY APF
DRAWN BY DFL
CHECKED BY WFM

RIGHT OF WAY DATA

REALIGNMENT OF COLONIAL AVENUE

SUFFOLK VA

SHEET NUMBER
1B

This document, together with the concepts and designs presented herein, as an instrument of service, is intended only for the specific purpose and client for which it was prepared. Reuse of and improper reliance on this document without written authorization and adaptation by Kimley-Horn and Associates, Inc. shall be without liability to Kimley-Horn and Associates, Inc.

This document, together with the concepts and designs presented herein, as an instrument of service, is intended only for the specific purpose and client for which it was prepared. Reuse of and improper reliance on this document without written authorization and adaptation by Kimley-Horn and Associates, Inc. shall be without liability to Kimley-Horn and Associates, Inc.

CITY OF SUFFOLK NOTES

GENERAL NOTES

1. THE CONTRACTOR SHALL REMOVE ALL REMOVED/DEMOLISHED MATERIAL FROM THE PROJECT SITE AND DISPOSE OF THE SAME IN A LEGAL MANNER AND/OR DELIVER TO THE CITY THOSE ITEMS SO DESIGNATED.
2. THE CONTRACTOR SHALL BE RESPONSIBLE FOR THE REMOVAL, REPLACEMENT, AND TEMPORARY RELOCATION OF EXISTING SIGNS UNLESS OTHERWISE INDICATED.
3. UNFORESEEN EXISTING ABANDONED STRUCTURES OR UTILITY LINES THAT ARE ENCOUNTERED DURING CONSTRUCTION SHALL NOT BE REMOVED WITHOUT AUTHORIZATION FROM THE CITY OR THE UTILITY OWNER.
4. AREAS OUTSIDE THE LIMITS OF THE PROPOSED WORK DISTURBED BY THE CONTRACTOR'S OPERATIONS SHALL BE RESTORED BY THE CONTRACTOR TO THEIR ORIGINAL CONDITIONS AT THE CONTRACTOR'S EXPENSE. ALL AREAS DISTURBED DURING CONSTRUCTION NOT COVERED WITH BUILDINGS, STRUCTURES, OR PAVEMENTS, SHALL BE TOPSOILED AND SEEDED AS REQUIRED BY THE VIRGINIA EROSION AND SEDIMENT CONTROL HANDBOOK (VESCH).
5. ALL CONSTRUCTION METHODS AND MATERIALS SHALL CONFORM TO THE PLANS AND SPECIFICATIONS AND TO ALL CURRENT APPLICABLE CODES AS WELL AS:
   - CITY OF SUFFOLK PUBLIC WORKS PUBLIC FACILITIES MANUAL (2014 EDITION)
   - CITY OF SUFFOLK PUBLIC UTILITIES PUBLIC FACILITIES MANUAL (2016 EDITION)
   - VDOT ROAD AND BRIDGE STANDARDS (2008 EDITION)
   - VDOT ROAD AND BRIDGE SPECIFICATIONS (2016 EDITION)
   - FHWA MANUAL ON UNIFORM TRAFFIC CONTROL DEVICES (2009 EDITION)
   - VIRGINIA SUPPLEMENT TO THE MUTCD (2011 EDITION)
   - VIRGINIA WORK AREA PROTECTION MANUAL (2011 EDITION)
   - VIRGINIA EROSION AND SEDIMENT CONTROL HANDBOOK (1992 EDITION)
6. THE CONTRACTOR SHALL BE RESPONSIBLE FOR REPAIRING OR REPLACING, AT HIS OWN EXPENSE, ANY EXISTING UTILITIES, PAVEMENT, CONCRETE ITEMS, PIPES, LANDSCAPING, AND OTHER ITEMS THAT ARE DAMAGED DURING CONSTRUCTION.
7. PRIOR TO CONSTRUCTION OR EXCAVATION, THE CONTRACTOR IS RESPONSIBLE FOR LOCATING AND PROTECTING ALL UNDERGROUND AND OVERHEAD UTILITIES (PUBLIC OR PRIVATE) THAT MAY EXIST AND CROSS THROUGH THE AREA OF CONSTRUCTION. A MINIMUM OF 72 HOURS PRIOR TO EXCAVATING, MISS UTILITY OF VIRGINIA (811) MUST BE CONTACTED.

EROSION AND SEDIMENT CONTROL NOTES

1. UNLESS OTHERWISE INDICATED, ALL VEGETATIVE AND STRUCTURAL EROSION AND SEDIMENT CONTROL PRACTICES WILL BE CONSTRUCTED AND MAINTAINED ACCORDING TO MINIMUM STANDARDS AND SPECIFICATIONS OF THE VIRGINIA EROSION AND SEDIMENT CONTROL HANDBOOK (3RD EDITION, 1992) AND THE CITY OF SUFFOLK EROSION AND SEDIMENT CONTROL ORDINANCE.
2. THE CONTRACTOR SHALL APPLY PERMANENT OR TEMPORARY SOIL STABILIZATION TO ALL DENUDED OR DISTURBED AREAS WITHIN 7 DAYS AFTER FINAL GRADE IS REACHED ON ANY PORTION OF THE SITE. SOIL STABILIZATION MUST ALSO BE APPLIED TO DENUDED OR DISTURBED AREAS WHICH MAY NOT BE AT FINAL GRADE BUT WHICH WILL REMAIN UNDISTURBED FOR LONGER THAN 14 DAYS. SOIL STABILIZATION MEASURES INCLUDE VEGETATIVE ESTABLISHMENT, MULCHING AND THE EARLY APPLICATION OF GRAVEL BASE MATERIAL ON AREAS TO BE PAVED.
3. ALL EROSION AND SEDIMENT CONTROL MEASURES ARE TO BE PLACED PRIOR TO OR AS THE FIRST STEP IN LAND DISTURBANCE.
4. THE CONTRACTOR SHALL INSPECT ALL EROSION CONTROL MEASURES PERIODICALLY AND AFTER EACH RUNOFF PRODUCING RAINFALL EVENT. ANY NECESSARY REPAIRS TO MAINTAIN THE EFFECTIVENESS OF THE EROSION CONTROL DEVICES AND CLEANUP OF SEDIMENTATION ARE THE RESPONSIBILITY OF THE CONTRACTOR AND SHALL BE MADE IMMEDIATELY.
5. THE CONTRACTOR SHALL LIMIT SITE ACCESS BY CONSTRUCTION VEHICLES TO ENTRANCES PROTECTED BY A STONE CONSTRUCTION ENTRANCE (VESCH STD. & SPEC. 3.02) OR AN APPROVED COMPARABLE CONTROL MEASURE. SEDIMENT SHALL BE REMOVED FROM PAVED AREAS ON A DAILY BASIS.
6. STOCKPILES OF SOIL AND OTHER ERODIBLE MATERIALS SHALL BE STABILIZED OR PROTECTED WITH SEDIMENT TRAPPING MEASURES. THE CONTRACTOR IS RESPONSIBLE FOR THE TEMPORARY PROTECTION AND PERMANENT STABILIZATION FOR STOCKPILES ON SITE AS WELL AS FOR MATERIALS TRANSPORTED FROM THE PROJECT SITE.
7. THE CONTRACTOR SHALL MONITOR AND TAKE PRECAUTIONS TO CONTROL DUST, INCLUDING (BUT NOT LIMITED TO) USE OF WATER, MULCH OR CHEMICAL DUST ADHESIVES AND CONTROL OF CONSTRUCTION SITE TRAFFIC.
8. EFFLUENT FROM DEWATERING OPERATIONS SHALL BE FILTERED OR PASSED THROUGH AN APPROVED SEDIMENT TRAPPING DEVICE, OR BOTH, AND DISCHARGED IN A MANNER THAT DOES NOT ADVERSELY AFFECT ADJACENT PROPERTIES, WETLANDS, WATERWAYS OR THE STORM DRAINAGE SYSTEM.
9. THE CONTRACTOR IS RESPONSIBLE FOR INSTALLATION AND MAINTENANCE OF ANY ADDITIONAL CONTROL MEASURES NECESSARY TO PREVENT EROSION AND SEDIMENTATION AS DETERMINED NECESSARY BY THE PLAN APPROVING AUTHORITY.
10. TEMPORARY EROSION AND SEDIMENT CONTROL MEASURES ARE NOT TO BE REMOVED UNTIL ALL DISTURBED AREAS ARE STABILIZED. AFTER STABILIZATION IS COMPLETE, ALL MEASURES SHALL BE REMOVED WITHIN 14 DAYS. TRAPPED SEDIMENT SHALL BE SPREAD AND SEEDED.

CLEARING & DEMOLITION

1. THE CONTRACTOR SHALL PERFORM CLEARING ACTIVITIES AS NOTED AND SHOWN ON THESE PLANS.
2. INSTALL ALL EROSION AND SEDIMENT CONTROL DEVICES AND TREE PROTECTION PRIOR TO BEGINNING CLEARING AND EXCAVATION WORK.
3. THE CONTRACTOR SHALL TAKE ALL PRECAUTIONS TO AVOID UNNECESSARY DAMAGE TO EXISTING ROAD SURFACES.
4. ALL EXISTING ITEMS TO REMAIN WHICH ARE DAMAGED DURING CONSTRUCTION SHALL BE RESTORED TO THEIR ORIGINAL CONDITION AT THE EXPENSE OF THE CONTRACTOR.
5. ALL CLEARING, GRUBBING, AND GRADING SHALL BE PERFORMED IN ACCORDANCE WITH CURRENT VDOT SPECIFICATIONS AND STANDARDS.

DRAINAGE

1. ALL STORM SEWER PIPES, DROP INLETS AND CURB INLETS SHALL BE CLEANED OF DEBRIS AND ERODED MATERIALS AT THE LAST STAGES OF CONSTRUCTION, THE COST OF WHICH SHALL BE INCIDENTAL TO OTHER ITEMS.
2. STORM SEWER PIPES AS SHOWN ON THE PLANS ARE MEASURED FROM THE CENTERLINE OF EACH STRUCTURE AND INVERT ELEVATIONS ARE ESTABLISHED BASED ON THIS CENTER LINE DISTANCE. LENGTH CALL OUTS FOR PIPES WITH FLARED END SECTIONS WILL BE MEASURED TO THE END OF THE END SECTION. CONTRACTOR SHALL LOCATE ALL END SECTIONS TO MATCH THE BANK SLOPE AND THE ACTUAL PIPE LENGTH SHALL BE ADJUSTED AS NECESSARY.
3. ALL DROP INLETS SHALL HAVE VDOT STD. IS-1 SHAPING.
4. POSITIVE DRAINAGE SHALL BE MAINTAINED AT ALL TIMES.
5. PRE-CAST STRUCTURES SHALL BE BUILT AND ASSEMBLED IN ACCORDANCE WITH VDOT STANDARD 103.01 AND .02 AND OTHER APPLICABLE STANDARDS.
6. TEMPORARY DRAINAGE DURING CONSTRUCTION TO BE PROVIDED BY THE CONTRACTOR TO RELIEVE AND PREVENT FLOODING IN AREAS THAT MAY CAUSE DAMAGE TO ROADWAYS OR ADJACENT PROPERTIES.

UTILITIES

1. THIS PLAN DOES NOT GUARANTEE THE EXISTENCE, NON-EXISTENCE, SIZE, TYPE, LOCATION, LOCATION, ALIGNMENT OR DEPTH OF ANY OR ALL UNDERGROUND UTILITIES OR OTHER FACILITIES. WHERE SURFACE FEATURES (MANHOLES, CATCH BASINS, VALVES, ETC.) ARE UNAVAILABLE OR INCONCLUSIVE, INFORMATION SHOWN MAY BE FROM UTILITY OWNER RECORDS AND/OR ELECTRONIC LINE TRACING, THE RELIABILITY OF WHICH IS UNCERTAIN. THE CONTRACTOR SHALL PERFORM WHATEVER TEST EXCAVATION OR OTHER INVESTIGATION IS NECESSARY TO VERIFY TIE-IN INVERTS, LOCATIONS AND CLEARANCES, AND SHALL REPORT IMMEDIATELY ANY DISCREPANCIES TO KIMLEY-HORN AND ASSOCIATES, INC. AT 213-8600. UTILITY COMPANIES SHALL BE NOTIFIED 48 HOURS IN ADVANCE OF ANY EXCAVATION IN THE PROXIMITY OF THEIR UTILITIES. THE CONTRACTOR CONTRACTOR SHALL BE RESPONSIBLE FOR REPAIRING AT HIS EXPENSE ANY EXISTING UTILITIES DAMAGED DURING CONSTRUCTION.
2. CONTRACTOR SHALL CONFORM TO THE "OVERHEAD HIGH VOLTAGE ACT" (EFFECTIVE JULY 1, 1989) AND SHALL CONTACT THE NECESSARY AUTHORITIES PRIOR TO START OF CONSTRUCTION.
3. THE CONTRACTOR IS RESPONSIBLE FOR THE PROTECTION OF ALL UTILITIES TO REMAIN IN PLACE.
4. ALL CONSTRUCTION METHODS & MATERIALS SHALL CONFORM WITH THE CURRENT SPECIFICATIONS AND STANDARDS OF THE DEPARTMENT OF PUBLIC UTILITIES, CITY OF SUFFOLK, VIRGINIA (DPU). DPU'S CONSTRUCTION STANDARDS ARE SET FORTH IN THEIR CONSTRUCTION SPECIFICATIONS AND STANDARD FOR WATER AND SANITARY SEWERAGE FACILITIES, A COPY OF WHICH MUST BE PURCHASED FROM DPU BY THE CONTRACTOR AND KEPT AT THE JOB SITE AT ALL TIMES. REFERENCE TO VDOT SHALL MEAN THE CURRENT STANDARDS AND/OR SPECIFICATIONS OF VDOT.

UTILITIES

5. THE CONTRACTOR SHALL BE RESPONSIBLE FOR REPLACING WITH MATCHING MATERIALS ANY PAVEMENT, DRIVEWAYS, WALKS, CURBS, ETC., THAT MUST BE CUT OR THAT ARE DAMAGED DURING CONSTRUCTION.
6. THE CONTRACTOR SHALL BE REQUIRED TO EXCAVATE BELOW PLAN GRADE ANY MATERIALS WHICH ARE UNSUITABLE FOR FOUNDATIONS, SUB GRADES, PIPE TRENCH BOTTOMS OR OTHER PURPOSES AND BACKFILL THESE AREAS WITH AN APPROVED MATERIAL. THE EXTENT OF UNDERCUTTING AND BACKFILLING SHALL BE DETERMINED BY DPU OR VDOT AS TO AREAS WITHIN STREET RIGHT-OF-WAY AND THE ENGINEER IN OTHER AREAS. COMPENSATION SHALL BE AS SET FORTH IN THE CONTRACT DOCUMENTS.
7. SUB-SURFACE UTILITY WARNING TAPE AS MANUFACTURED BY THE GRIFFOLYN COMPANY, OR EQUAL, SHALL BE PLACED AT AN ELEVATION NOT LESS THAN 6-INCHES NOR MORE THAN 12-INCHES BELOW THE PROPOSED FINISHED GRADE ABOVE NON-CONDUCTIVE SEWER, WATER AND SEWER FORCE MAINS IN PUBLIC RIGHTS-OF-WAY OR EASEMENTS. THE TAPE SHALL BE OF A DURABLE, METALIZED, PLASTIC FILM SIMILAR TO "TERRA-TAPE D" FOR IDENTIFICATION BY ELECTRONIC PIPE LOCATING DEVICE AS WELL AS VISUAL IDENTIFICATION. THE TAPE FOR SEWER FORCE MAIN LINE SHALL BE BRIGHT GREEN WITH THE FOLLOWING IMPRINTED LEGEND "CAUTION-SEWER LINE BELOW". THE TAPE FOR WATERLINES SHALL BE BRIGHT BLUE WITH THE FOLLOWING IMPRINTED LEGEND "CAUTION-WATER LINE BELOW." IN ADDITION TO THE DETECTABLE TAPE, 12 GAGE COPPER WIRE SHALL BE INSTALLED ALONG THE PIPE FOR PURPOSES OR POSITIVE IDENTIFICATION AND LOCATION, AS REQUIRED BY THE DEPARTMENT OF PUBLIC UTILITIES.
8. SEE SECTION 1.4/ SEPARATION OF WATER AND SANITARY SEWER OF THE CITY OF SUFFOLK CONSTRUCTION SPECIFICATIONS AND STANDARDS FOR PROPER SEPARATION OF WATER AND SEWER LINES.
9. WATER MAIN SERVICE PIPE.

   A. ALL WATER AND SANITARY SEWER WORK SHALL CONFORM TO CITY OF SUFFOLK DEPARTMENT OF PUBLIC UTILITIES CONSTRUCTION SPECIFICATIONS AND STANDARDS.

   B. DUCTILE IRON PIPE. DUCTILE IRON PIPE SHALL BE CENTRIFUGAL CAST PIPE MANUFACTURED IN ACCORDANCE WITH ANSI SPECIFICATIONS A21.51. DUCTILE IRON PIPE SHALL BE CEMENT-MORTAR LINED INSIDE IN ACCORDANCE WITH ANSI SPECIFICATIONS A21.4-74. CEMENT FOR THE MORTAR SHALL BE TYPE II PORTLAND CEMENT. THE STANDARD SEAL COAT OF BITUMINOUS MATERIAL SHALL BE APPLIED TO THE EXTERIOR OF THE PIPE. DUCTILE IRON PIPE SHALL BE CLASS 50.

   C. JOINTS FOR DUCTILE IRON PIPE SHALL BE ONE OF THE FOLLOWING:

   (1) RUBBER GASKET (PUSH-ON) TYPE JOINT. RUBBER GASKET TYPE JOINTS SHALL BE MANUFACTURED IN ACCORDANCE WITH ANSI SPECIFICATIONS A21.11-72 AND DESIGNED TO LOCK AGAINST DISPLACEMENT WITHOUT CAULKING. THE GASKET SHALL BE A RESILIENT RUBBER OF HEAVY SECTION, HIGH DUROMETER, AND SINGLE MOLDED AND SHALL BE INSTALLED IN ACCORDANCE WITH THE PIPE MANUFACTURER'S RECOMMENDATIONS. THE GASKET LUBRICANT SHALL BE A NON-TOXIC, TASTELESS, ODORLESS GREASE THAT WILL NOT SUPPORT BACTERIA. EACH GASKET LUBRICANT CONTAINER SHALL BE LABELED WITH THE TRADE NAME AND THE PIPE MANUFACTURER'S NAME.

   (2) MECHANICAL JOINT. STANDARD MECHANICAL JOINTS SHALL BE MANUFACTURED IN ACCORDANCE WITH ANSI SPECIFICATIONS A21.11-72 (AWWA SPECIFICATIONS C111-72). THE MECHANICAL JOINT BOLTS SHALL BE A U.S. STANDARD SIZE, HIGH STRENGTH, CORROSION RESISTANT STEEL ALLOY WITH HEXAGON NUTS.

   MECHANICAL JOINTS SHALL BE USED FOR THE CONNECTION OF ALL FITTINGS, VALVES, AND HYDRANTS.

   FITTINGS SHALL BE MANUFACTURED DUCTILE IRON AND SHALL BE IN ACCORDANCE WITH THE REQUIREMENTS OF ANSI SPECIFICATIONS A21.10-71 (AWWA SPECIFICATIONS C110-71). FITTINGS SHALL BE COMPATIBLE WITH THE PIPE AND SHALL PROVIDE AT LEAST EQUAL RESISTANCE TO INTERNAL AND EXTERNAL LOADS ON THE PIPE, FITTINGS SHALL BE BITUMINOUS COATED ON THE OUTSIDE AND CEMENT MORTAR LINED ON THE INSIDE ACCORDING TO AWWA SPECIFICATIONS A21.4-74 (ANSI SPECIFICATIONS C104-74).

   IN LIEU OF THE FITTINGS SPECIFIED ABOVE, AWWA C-153 CLASS 350 DUCTILE IRON COMPACT FITTINGS MAY BE SUBSTITUTED.

   D. AWWA POLYVINYL-CHLORIDE PIPE. PIPE SHALL BE MANUFACTURED IN ACCORDANCE WITH AWWA SPECIFICATIONS C900-81 TO DUCTILE IRON PIPE OUTSIDE DIAMETER DIMENSIONS AND BE APPROVED BY UNDERWRITERS LABORATORIES. CLASS 150 PIPE SHALL MEET THE REQUIREMENTS OF DR 18. JOINTS SHALL CONSIST OF AN INTEGRAL WALL SECTION WITH SOLID CROSS SECTION RUBBER GASKET CONFORMING TO ASTM DESIGNATION D-1869. PIPE SHALL BE CLEARLY MARKED TO SHOW CLASS, SIZE, MANUFACTURER'S NAME. FITTINGS FOR POLYVINYL-CHLORIDE PIPE SHALL BE MANUFACTURED OF CAST OR DUCTILE IRON.
10. GATE VALVES TWO INCHES AND SMALLER SHALL BE INSIDE SCREW, SOLID BRONZE, TAPERED SEAT, AND DOUBLE DISC CONSTRUCTION FOR 250 PSI WORKING PRESSURE. THE VALVES SHALL BE SUITABLE FOR THE SERVICE REQUIRED. LARGER GATE VALVES SHALL CONFORM TO AWWA SPECIFICATION C509 AND SHALL BE IRON BODY, BRONZE MOUNTED, NON-RISING STEM WITH AN OIL RESERVOIR ENCLOSED BETWEEN TWO "O" RINGS, ONE BELOW AND ONE ABOVE THE THRUST COLLAR ON THE OPERATING STEM. GATE VALVES SHALL BE RESILIENT SEATED WEDGE STYLE AND SHALL BE UL AND FM APPROVED, WITH TOTALLY ENCAPSULATED WEDGE, AND SHALL BE KENNEDY 8000 SERIES, M&H VALVE CO. RS SERIES, MUELLER 2360 SERIES, US PIPE MODEL A-USPO, OR APPROVED EQUAL. GATE VALVES SHALL BE FOR USE WITH DUCTILE IRON OR PVC PIPE OR ON FIRE HYDRANT SETTINGS AND SHALL HAVE AWWA C111 MECHANICAL JOINTS. GATE VALVES SHALL BE NUT OPERATED AND SHALL OPEN LEFT.
11. FIRE HYDRANTS SHALL BE KENNEDY K81A, MUELLER A421 OR APPROVED EQUAL. PAINTED WITH ONE COAT ZINC CHROMATE PRIMER, 2 FINISH COATS OF CITY APPR. ALLUM.
12. WATER MAINS SHALL HAVE A MINIMUM COVER OF 36", UNLESS OTHERWISE NOTED ON THE PLANS.
13. THE METHOD OF THRUST RESTRAINT REQUIRED FOR ALL BENDS, TEES, OFFSETS, OR PLUGGED ENDS FOR WATER LINES OR FORCE MAINS ARE THE USE OF MEGA-LUG RETAINER GLANDS (OR APPROVED EQUAL) OR LOCKING RESTRAINED JOINT PIPE. VALVES SHALL BE RESTRAINED IN BOTH DIRECTIONS AS A DEAD END.
14. WATER SERVICE LINES TO BE INSTALLED AS SHOWN, TO ELIMINATE NEED FOR PAVEMENT PATCHING WHEN BUILDING CONNECTION IS MADE.
15. FOR LINES LAID ON CURVES, DEFLECTIONS AT JOINTS SHALL NOT EXCEED MANUFACTURER'S RECOMMENDATIONS.
16. CONTRACTOR SHALL NOTIFY THE CITY OF SUFFOLK DEPARTMENT OF PUBLIC UTILITIES AT (757) 514-7078 AT LEAST 48 HOURS PRIOR TO COMMENCEMENT OF WORK ANY SEWER OR WATER MAIN INSTALLATION.
17. HYDRANTS SHALL BE PRECEDED IN LINE BY AN APPROVED VALVE AND VALVE BOX. THE HYDRANTS SHALL HAVE AN EIGHT INCH MECHANICAL JOINT INLET AND MAIN VALVE OPENING OF 5-½ INCHES MINIMUM. HYDRANTS SHALL BE EQUIPPED WITH TWO 2-½ INCH HOSE CONNECTIONS AND ONE 4-½ INCH PUMPER CONNECTION WITH NATIONAL STANDARD THREADS. HOSE NIPPLES SHALL BE BRONZE OR NON-CORROSIVE METAL AND THE NIPPLE CAPS SHALL BE SECURELY CHAINED TO THE BARREL. THE DIRECTION OF OPENING SHALL BE LEFT AND BE CAST ON THE HEAD OF THE HYDRANT.
18. ALL SERVICES SHALL BE METERED FOR THE INDICATION OF WATER CONSUMPTION IN CUBIC FEET. EACH WATER METER INSTALLATION SHALL INCLUDE TAP, CORPORATION STOP, METER BOX, COPPER SETTER AND METER. THE REGISTER SHALL HAVE STRAIGHT READING DIALS AND SHALL BE COMPLETELY ENCASED, HERMETICALLY SEALED, AND OF A FROST-PROTECTIVE DESIGN. EACH METER SHALL HAVE AN ARROW ON IT TO INDICATE THE DIRECTION OF FLOW AND SHALL HAVE THE MANUFACTURER'S SERIAL NUMBER STAMPED ON THE REGISTER LID. METERS SHALL BE SENSUS TECHNOLOGIES, INC. WITH TOUCHREAD PIT LID REGISTER AND REMOTE MODULE. METERS SHALL CONFORM TO AWWA C-700 AND C707, LATEST EDITION. INDIVIDUAL METER SHALL BE PROVIDED TO THE DEPARTMENT OF PUBLIC UTILITIES AT THE CONTRACTOR'S EXPENSE.
19. THE CONTRACTOR WILL BE RESPONSIBLE FOR GRADE AND CONDITION OF THE WATER AND SEWER SETTINGS UNTIL ISSUANCE OF OCCUPANCY PERMITS.
20. BACKFILL MATERIAL SHALL BE PLACED EVENLY AND CAREFULLY AROUND THE PIPE AND SHALL BE SOLIDLY HAND TAMPED IN 6 INCH LAYERS UP TO A LEVEL OF AT LEAST ONE FOOT ABOVE THE TOP OF THE PIPE. THE REMAINDER OF THE TRENCH SHALL BE BACKFILLED AND COMPACTED BY MECHANICAL TAMPERS AND SHALL ACHIEVE A DENSITY OF AT LEAST 95 PERCENT OF THE MAXIMUM DENSITY OR AS SPECIFIED IN SECTION 303 OF THE 2007 VDOT ROAD AND BRIDGE SPECIFICATIONS.
21. LOCKING FIRE DEPARTMENT CONNECTION CAPS SHALL BE REQUIRED ON WATER BASED FIRE PROTECTION SYSTEMS.
22. THE CONTRACTOR SHALL ENSURE THAT ALL EASEMENTS AND/OR FEE SIMPLE LANDS FOR PUBLIC UTILITIES ARE DEDICATED TO THE CITY OF SUFFOLK AND PROPERLY PLATTED AND RECORDED. THE RECORDATION OF EASEMENTS OR FEE SIMPLE LAND APPLIES TO ALL WATER AND SEWER MAINS, FIRE HYDRANTS, DETECTOR CHECKS, METERS, SERVICE CLEANOUTS, AND ANY OTHER PUBLIC WATER AND SEWER INFRASTRUCTURE WHICH IS IDENTIFIED ON THE APPROVED SITE/SUBDIVISION/ ENGINEERING PLAN AS INTENDING TO BE DEDICATED TO THE CITY OF SUFFOLK. EASEMENT OR LAND RECORDING SHALL BE ACCOMPLISHED THROUGH THE FINAL SUBDIVISION PLATTING PROCESS AS PART OF THE CITY'S UNIFIED DEVELOPMENT ORDINANCE PROCESS. ALTERNATIVELY AND WHEN THE WATER AND SEWER SYSTEM IS INTENDED TO BE ACCEPTED BY THE CITY AND BECOME OPERATIONAL PRIOR TO FINAL PLATTING, UTILITY EASEMENTS OR FEE SIMPLE LANDS ARE TO BE PROVIDED BY SEPARATE PLATS IN ACCORDANCE WITH THE DEPARTMENT OF PUBLIC UTILITIES REQUIREMENTS. IN THESE CASES, THE PLAT SHALL BE SUBMITTED DIRECTLY TO THE DEPARTMENT OF PUBLIC UTILITIES ENGINEERING DIVISION FOR REVIEW AND APPROVAL. THE DEPARTMENT OF PUBLIC UTILITIES WILL PROVIDE THE OWNER WITH SAMPLE LANGUAGE FOR THE LEGAL DESCRIPTION. CERTIFICATE OF OCCUPANCY, UTILITY CONNECTIONS AND/OR ACCEPTANCE OF THE UTILITY SYSTEM BY THE CITY MAY PROCEED UPON EVIDENCE OF APPROPRIATE RECORDATION.
23. SEWER INFRASTRUCTURE IS DESIGNED IN ACCORDANCE WITH THE HAMPTON ROADS REGIONAL TECHNICAL STANDARDS, PURSUANT TO THE REGIONAL CONSENT ORDER OF SEPTEMBER 2007.

UTILITIES (CONTINUED)

24. SEWER MAIN SERVICE PIPE:

   A. THE SEWER FORCE MAIN SHALL BE DUCTILE IRON (D.I.) PIPE CAPABLE OF 150 PSI WORKING PRESSURE. ALL FITTINGS SHALL BE DUCTILE IRON PIPE.

   B. EXCEPT WHERE OTHERWISE NOTED, WATER AND SEWER FORCE MAINS SHALL BE LAID WITH A MINIMUM COVER OF 36 INCHES.

   C. FOR DUCTILE IRON PIPE, USE SPECIAL CLASS 50 MINIMUM WALL THICKNESS. FLANGED JOINTS, IF USED, SHALL BE CLASS 125 PER ANSI B16.1. STANDARD FITTINGS IN ACCORDANCE WITH AWWA C110 ARE PREFERRED. APPROVAL FOR THE USE OF FITTINGS MANUFACTURED IN ACCORDANCE WITH AWWA C-153 SHALL BE REVIEWED AND APPROVED BY HRSD PROJECT MANAGER AND/OR ENGINEER.

CITY OF SUFFOLK TRAFFIC ENGINEERING GENERAL NOTES

1. A LAND USE PERMIT MUST BE OBTAINED FROM THE CITY OF SUFFOLK, DEPARTMENT OF PUBLIC WORKS BEFORE ANY CONSTRUCTION IS STARTED WITHIN THE EXISTING CITY RIGHT OF WAY. CONTACT THE CITY FOR THE PERMIT FEE AND BOND AMOUNT. ALL LAND USE PERMIT APPLICATIONS MUST HAVE TWO (2) SETS OF APPROVED PLANS, A CHECK FOR THE PROCESSING FEE MADE PAYABLE TO THE CITY TREASURER, AND SURETY IN THE REQUIRED AMOUNT.
2. THE CONTRACTOR IS RESPONSIBLE FOR THE RELOCATION OF ANY UTILITIES OR PAVEMENT MARKINGS WITHIN THE EXISTING RIGHT OF WAY OR PROPOSED RIGHT OF WAY REQUIRED BY THE DEVELOPMENT OF THE SITE/SUBDIVISION.
3. PRIOR TO ANY CONSTRUCTION, THE CONTRACTOR SHALL CONSULT WITH THE ENGINEER TO VERIFY THE FINAL APPROVAL OF THE PLANS, OR ANY REVISED PLANS, BY THE VARIOUS AGENCIES (PUBLIC UTILITIES, PUBLIC WORKS, ETC.).
4. CITY OF SUFFOLK APPROVAL OF THESE PLANS WILL EXPIRE IN FIVE (5) YEARS FROM THE DATE OF APPROVAL.
5. THE TRAFFIC ENGINEER IS TO RECEIVE WRITTEN NOTIFICATION 48 HOURS PRIOR TO THE START OF ANY TRAFFIC ENGINEERING RELATED WORK. A PRE-CONSTRUCTION MEETING WILL BE REQUIRED PRIOR TO ANY TRAFFIC ENGINEERING RELATED WORK ON THE SITE. THE CONTRACTOR SHALL ATTEND THE PRE-CONSTRUCTION MEETING. THE CONTRACTOR SHALL HAVE A PROPOSED PROGRESS SCHEDULE OF WORK TO DISCUSS AT THE MEETING.
6. ANY ERRORS, CONFLICTS, OR DISCREPANCIES FOUND ON THE APPROVED PLANS SHALL BE REPORTED TO THE ENGINEER AND THE CITY TRAFFIC ENGINEER FOR RESOLUTION BEFORE PROCEEDING FURTHER WITH WORK.
7. THE CONTRACTOR (SUB-CONTRACTOR) SHALL VERIFY IN THE FIELD THE ELEVATIONS OF ALL POINTS OF CONNECTION OF PROPOSED WORK TO EXISTING ITEMS, PRIOR TO THE CONSTRUCTION IN THE FIELD.
8. ALL MATERIALS AND CONSTRUCTION WITHIN THE PROPOSED PUBLIC RIGHT OF WAY, SHALL BE IN ACCORDANCE WITH THE CURRENT CITY OF SUFFOLK SPECIFICATIONS AND STANDARDS.
9. ANY REQUEST FOR A CHANGE OF SPECIFIED MATERIALS OR DESIGN FROM THE APPROVED PLANS WILL NEED TO BE SUBMITTED TO THE CITY TRAFFIC ENGINEER. A LETTER MUST ACCOMPANY THE PROPOSED CHANGES AND INCLUDE REVISED PLAN SHEETS AND/OR DESIGN CALCULATIONS FOR REVIEW AND APPROVAL BY THE CITY TRAFFIC ENGINEER.
10. A PROFESSIONAL ENGINEER OR PROFESSIONAL GEOLOGIST WILL SUBMIT A COMPLETE REPORT WITH BORING DATA AND RECOMMENDATIONS TO THE CITY FOR APPROVAL OF HIS PROPOSED METHOD OF CONSTRUCTION. THIS REPORT SHALL BE IN CONFORMANCE WITH VDOT ROAD AND BRIDGE SPECIFICATION. THE REPORT WILL SHOW THE BORE LOCATIONS, TYPES OF SOILS ENCOUNTERED, AND ANY RECOMMENDATIONS.
11. WHEN SOILS OCCUR THAT ARE UNSUITABLE FOR FOUNDATIONS, BACKFILL, OR OTHER WORK REQUIREMENT PURPOSES, THE CONTRACTOR SHALL EXCAVATE SAID MATERIAL UNDER DIRECTION OF THE SOILS ENGINEER, BY UNDERCUTTING SUCH MATERIAL BELOW THE PROPOSED GRADES SHOWN ON THE PLANS. THE CONTRACTOR SHALL NOTIFY THE ENGINEER AND THE CITY TRAFFIC ENGINEER UPON DISCOVERY OF THE UNSUITABLE MATERIAL. CONCURRENCE OF THE ENGINEER SHALL BE OBTAINED BEFORE ADDITIONAL WORK IS UNDERTAKEN.
12. ALL EROSION AND SEDIMENT CONTROL MEASURES SHALL BE THE RESPONSIBILITY OF THE CONTRACTOR. ALL EROSION CONTROL MEASURES WILL BE IN PLACE AND REVIEWED BY THE CONTRACTOR DAILY AND AFTER ALL INCLEMENT WEATHER TO ENSURE COMPLIANCE FOR THE CONTROL OF ANY EROSION AND SILTATION. ANY CORRECTIONS OR REPAIRS WILL BE MADE IMMEDIATELY. IN ACCORDANCE WITH CITY OF SUFFOLK PFM, THE CITY REQUIRES AN INDIVIDUAL CERTIFIED BY THE VIRGINIA DEPARTMENT OF CONSERVATION AND RECREATION, HOLDING A RESPONSIBLE LAND DISTURBER CERTIFICATION, TO BE IN CHARGE OF THE LAND DISTURBING ACTIVITY AND ON THE WORK SITE AT ALL TIMES.
13. THE CONTRACTOR AND SUBCONTRACTOR(S) SHALL HAVE A COPY OF THE CURRENT PROJECT STANDARDS AND SPECIFICATIONS AT THE SITE. THE CONTRACTOR SHALL HAVE AT LEAST ONE (1) SET OF APPROVED PLANS WITH ALL APPROVED REVISIONS. THE LAND USE PERMIT WILL BE AT THE SITE AT ALL TIMES.
14. THE CONTRACTOR WILL BE RESPONSIBLE FOR REPLACING, WITH MATCHING MATERIALS, ANY PAVEMENT, CURB AND GUTTER, DRIVEWAY PIPE, SIDEWALK, ETC. THAT ARE DAMAGED DURING THE CONSTRUCTION OF THE PROJECT.
15. CERTIFICATION AND SOURCE OF MATERIALS ARE TO BE SUBMITTED TO THE CITY TRAFFIC ENGINEER. ALL MATERIALS MUST MEET CITY OF SUFFOLK SPECIFICATIONS AND STANDARDS.
16. THE GEOTECHNICAL ENGINEER AND/OR HIS CERTIFIED MATERIALS TECHNICIANS WILL PERFORM COMPACTION (DENSITY) TESTS FOR REVIEW BY THE CITY OF SUFFOLK. ALL TESTS WILL BE PERFORMED IN ACCORDANCE WITH THE CURRENT PFM SPECIFICATIONS AND STANDARDS. BACKFILL MATERIAL FOR PIPE, STRUCTURES, AND UTILITIES LOCATED WITHIN THE PROPOSED RIGHT OF WAY WILL BE COMPACTED AND TESTED AS THE FILL MATERIAL IS PLACED IN UNIFORM LIFTS. A MINIMUM OF 95% DENSITY WITH THE SOILS STANDARD PROCTOR WILL BE OBTAINED WITH THE PROPER MOISTURE CONTENT ON EMBANKMENT AND FILLS MATERIAL. FOR THE FINAL 6" OF THE FINISHED SUBGRADE, 100% DENSITY WILL BE OBTAINED. THE TEST RESULTS WILL BE SUBMITTED TO THE CITY OF SUFFOLK FOR REVIEW AND COMPLIANCE OF THE MATERIALS, PRIOR TO THE CONTRACTOR REQUESTING AN INSPECTION FOR A PROOF ROLL ON THE SUBGRADE, AGGREGATE STONE, BASE MIX (ASPHALT) OR THE PLACEMENT OF THE SURFACE MIX.
17. ALL TRAFFIC ENGINEERING EASEMENTS SHALL BE LABELED AS "TRAFFIC CONTROL EASEMENTS" AND SHALL BE DEDICATED TO THE CITY OF SUFFOLK.
18. ALL CONCRETE SHALL BE CLASS A3 (3,500 PSI WITH AIR ENTRAINED ADDITIVE) AND TESTED BY THE OWNER'S GEOTECHNICAL ENGINEER FOR CONFORMANCE TO CITY OF SUFFOLK PFM SPECIFICATIONS AND STANDARDS.
19. ALL UNDERGROUND UTILITIES ARE TO BE IN PLACED PRIOR TO THE PLACEMENT OF THE BASE MATERIAL AND SHALL HAVE A MINIMUM COVERING OF 36". ON CURB AND GUTTER STREETS, THE AREA DIRECTLY BEHIND THE CURB TO THE RIGHT OF WAY LINE SHALL BE RELATIVELY FLAT AT THE PRIVATE ENTRANCE LOCATION. THE CONTRACTOR SHOULD CUT EMBANKMENTS TO THE RIGHT OF WAY LINE PRIOR TO THE INSTALLATION OF ALL UNDERGROUND UTILITIES TO INSURE A MINIMUM 36" OF COVER.
20. ALL HOT MIX (ASPHALT) COURSES SHALL BE PLACED IN ACCORDANCE WITH CITY PFM. THE WEATHER LIMITATIONS OF A 40° F SURFACE TEMPERATURE OR 50° F AND RISING AIR TEMPERATURE SHALL BE FOLLOWED. THE GEOTECHNICAL ENGINEER SHALL TEST THE MATERIAL TO ENSURE COMPLIANCE WITH CURRENT PFM SPECIFICATION AND THE SUPPLIER'S JOB MIX DESIGN. THE GEOTECHNICAL ENGINEER SHALL ALSO PERFORM A ROLLER PATTERN AND A CONTROL STRIP FOR THE THEORETICAL DENSITY (COMPACTION) OF THE MATERIAL IN CONFORMANCE WITH THE CURRENT CITY PFM SPECIFICATIONS.
21. ALL UTILITY CABINETS, PEDESTALS, AND STREETLIGHTS SHALL BE LOCATED IN ACCORDANCE WITH CLEAR ZONE REQUIREMENTS, AS NOTED IN THE CURRENT PFM. THERE SHALL NOT BE ANY CABINETS, PEDESTALS, OR FIRE HYDRANTS LOCATED ON THE SHOULDER.
22. NO EASEMENTS SHALL ENCROACH UPON THE PROPOSED R/W, ANY EASEMENTS LOCATED WITHIN THE PROPOSED R/W MUST BE REMOVED FROM THE PLAT PRIOR TO THE RECORDATION OF THE PLAT. A DEED OF QUIT CLAIM WILL BE REQUIRED ON ANY EASEMENTS LOCATED WITHIN THE PROPOSED R/W PRIOR TO THE ACCEPTANCE OF THE STREETS INTO THE CITY ROAD SYSTEM.
23. CONTACT CITY TRAFFIC ENGINEER 72 HOURS IN ADVANCE OF ALL PAVEMENT MARKINGS/SIGN INSTALLATIONS AT (757) 514-7603. FAILURE TO DO SO MAY RESULT IN ADDITIONAL COST TO THE CONTRACTOR.
24. TRAFFIC ON EXISTING ROADWAYS MUST BE MAINTAINED DURING CONSTRUCTION WHEN ANY WORK IS BEING PERFORMED WITHIN THE EXISTING RIGHT OF WAY. THE MAINTENANCE OF TRAFFIC PLAN FOR THIS WORK MUST BE IN CONFORMANCE WITH THE VIRGINIA WORK AREA PROTECTION MANUAL AND ANY OTHER SPECIAL PROVISIONS LISTED IN THE CITY LAND USE PACKAGE FOR THIS SITE.
25. DURING THE CONSTRUCTION, THE CONTRACTOR SHALL RECORD ON A SET OF THE PLANS THE AS-BUILT LOCATIONS AND DIMENSIONS OF ALL CONSTRUCTED ITEMS. THE CONTRACTOR SHALL PROVIDE THE ENGINEER AS-BUILT LOCATIONS AND DIMENSIONS SHOWN AS MARK-UPS AND NOTES ON A COMPLETE SET OF PLANS. EACH SHEET SHALL BE MARKED "AS-BUILT" OR "RECORD DRAWINGS" AND DATED. ALL AS-BUILT INFORMATION SHALL BE "BLOCKED' OR "FRAMED" FOR IDENTIFICATION AS FINAL AS-BUILT INFORMATION.
26. TRAFFIC FACILITIES SHALL BE LOCATED BY A DISTANCE MEASURED FROM THE CENTERLINE OF THE STREET, WHERE APPLICABLE, AND A DISTANCE OVER TO THE STRUCTURE, ALSO MEASURED FROM THE CENTERLINE OF THE STREET. A TOLERANCE OF TEN FEET (10') FOR DRAWINGS AT A SCALE OF TWENTY FEET (20') OR MORE AND FIVE FEET (5') FOR A DRAWING AT A SCALE LESS THAN TWENTY FEET (20') WILL BE ALLOWED FOR THE DRAWN LOCATION OF STRUCTURES. WHERE THE AS-BUILT LOCATION OF A STRUCTURE IS AT A GREATER DISTANCE THAN THAT INDICATED ABOVE FROM IT'S PLANNED LOCATION, THE STRUCTURE SHALL BE REDRAWN AT ITS AS-BUILT LOCATION, ERASING OR HATCHING OUT THE STRUCTURE AT ITS PLANNED LOCATION.

CITY OF SUFFOLK PAVEMENT MARKING STANDARDS

1. INSTALLATION AND MATERIALS FOR ALL PAVEMENT MARKINGS AND LEGENDS WILL BE IN ACCORDANCE WITH THE CITY OF SUFFOLK DEPARTMENT OF PUBLIC WORKS/TRAFFIC ENGINEERING DIVISION SPECIFICATIONS SET FORTH IN THIS DOCUMENT UNLESS OTHERWISE STATED ON THE PLANS OR IN CONTRACT DOCUMENTS.
2. THE CONTRACTOR WILL NOTE ALL SPECIAL PROVISIONS OF THE CONTRACT SPECIFICALLY WITH THE REGARD TO RATE OF APPLICATION, MAINTENANCE OF TRAFFIC, RESTRICTED WORKING HOURS, AND OR RESTRICTED WEATHER CONDITIONS.
3. THE CONTRACTOR WILL REMOVE ALL PREVIOUS PAVEMENT MARKINGS WHICH IN THE OPINION OF THE ENGINEER WILL CONFLICT WITH THE NEW PAVEMENT MARKINGS. ALL ERADICATION WILL BE IN CONFORMANCE WITH THE VDOT SPECIFICATIONS.
4. BEFORE ANY MARKINGS WILL BE APPLIED IN THE RIGHT OF WAY, THE CITY TRAFFIC ENGINEER'S OFFICE MUST BE NOTIFIED 72 HOURS IN ADVANCE. IF THIS OFFICE IS NOT NOTIFIED AND THE MARKINGS DO NOT MEET WITH WHAT THE CITY TRAFFIC ENGINEER'S OFFICE CONSIDERS PROPER, THE MARKINGS WILL BE ERADICATED AND REPLACED AT THE SOLE EXPENSE OF THE CONTRACTOR.
5. NO PAVEMENT MARKINGS WILL BE APPLIED UNTIL 48 HOURS AFTER RAINFALL, UNLESS OTHERWISE DIRECTED BY THE CITY TRAFFIC ENGINEER'S OFFICE.
6. SNOW PLOWABLE PAVEMENT MARKERS WILL BE INSTALLED ONLY BY DIRECTION OF THE CITY TRAFFIC ENGINEER'S OFFICE.
7. ONLY ALKYD BASED THERMOPLASTIC IS TO BE USED UNLESS OTHERWISE DIRECTED BY THE CITY TRAFFIC ENGINEER'S OFFICE.
8. ALL PAVEMENT MARKINGS INSTALLED IN THE CITY'S RIGHT OF WAY WHETHER "TEMPORARY OR PERMANENT" WILL CONTAIN GLASS BEADS.

MAINTENANCE OF TRAFFIC

1. ALL MAINTENANCE OF TRAFFIC MEASURES SHALL BE IN ACCORDANCE WITH CURRENT EDITIONS OF THE MANUAL ON UNIFORM TRAFFIC DEVICES AND THE VIRGINIA WORK AREA PROTECTION MANUAL.
2. THE CONTRACTOR SHALL BE RESPONSIBLE FOR ALL WORK ZONE SIGNING AND ANY OTHER TRAFFIC CONTROL DEVICES NECESSARY TO PERFORM THE WORK. UPON COMPLETION OF THE WORK, THE CONTRACTOR SHALL IMMEDIATELY REMOVE ALL SUCH TEMPORARY DEVICES.
3. TRAFFIC SAFETY PLANS MUST BE SUBMITTED TO THE CITY OF SUFFOLK PUBLIC WORKS NO LESS THAN 72 HOURS PRIOR TO COMMENCEMENT OF WORK WITHIN THE RIGHT-OF-WAY. ALL PLANS MUST BE APPROVED BY PUBLIC WORKS PRIOR TO COMMENCEMENT.
4. ALL WORK AREAS AND LANE CLOSURES SHALL BE IN ACCORDANCE WITH THE VIRGINIA WORK AREA PROTECTION MANUAL DATED AUGUST 2011 AND SHALL BE DIRECTED OR APPROVED BY CITY OF SUFFOLK PUBLIC WORKS DEPARTMENT – ENGINEERING DIVISION. NO LANE CLOSURE OPERATION SHALL BE CONDUCTED WITHOUT A RECEIVED WRITTEN REQUEST 48 TO 72 HOURS PRIOR TO THE OPERATION. ONCE THE REQUEST HAS BEEN APPROVED, WORK MAY COMMENCE. HOURS OF CLOSURE SHALL BE CONDUCTED BETWEEN 9:00 AM AND 4:00 PM MONDAY THROUGH FRIDAY. LANE CLOSURES WILL NOT BE PERMITTED ON SATURDAYS, SUNDAYS, STATE RECOGNIZED HOLIDAYS AND OTHER DAYS DEEMED BY THE CITY OF SUFFOLK TO BE THE SAME AS HOLIDAYS. LANE CLOSURES WILL BE PROHIBITED FROM NOON PRIOR TO A THREE DAY WEEKEND TO NOON THE FOLLOWING WORK DAY. THE CONTRACTOR SHALL NOT CONDUCT OPERATIONS WHEN THE WEATHER CAUSES UNSAFE CONDITIONS FOR THE TRAVELING PUBLIC AS DETERMINED BY THE PUBLIC WORKS DEPARTMENT – ENGINEERING DIVISION. THE PUBLIC WORKS ENGINEERING DEPARTMENT RESERVES THE RIGHT TO CHANGE ANY OR ALL OF THE WORKING HOURS WHEN SUCH CHANGES ARE IN BEST INTEREST OF THE TRAVELING PUBLIC. THE CONTRACTOR MAY REQUEST A CHANGE IN THE HOURS OF OPERATION IF THE REQUESTED TIME WILL BE SAFE FOR THE TRAVELING PUBLIC. THIS REQUEST MUST BE APPROVED BY THE PUBLIC WORKS ENGINEERING DEPARTMENT PRIOR TO CONDUCTING SUCH OPERATION. ALL SIGNS, EQUIPMENT AND MATERIAL WILL BE REMOVED FROM THE CITY OF SUFFOLK'S RIGHT-OF-WAY PRIOR TO THE END OF THE LANE CLOSURE TIME INDICATED. FOR WORK ON ROUTES 10/32, 13, 17, 58, 337, AND 460, THERE SHALL BE AT LEAST ONE LANE OPEN AT ALL TIMES.

VDOT GENERAL NOTES

GRADING

G-1 THE GRADE LINE DENOTES TOP OF FINISHED PAVEMENT UNLESS SHOWN OTHERWISE ON TYPICAL SECTIONS OR PLANS.

G-3 EARTHWORK QUANTITIES ON THIS PROJECT ARE BASED ON ANTICIPATED SETTLEMENT AND MAY REQUIRE ADJUSTING DURING CONSTRUCTION. PAYMENT WILL BE MADE ONLY FOR QUANTITIES ACTUALLY MOVED.

G-4 THE COST OF REMOVAL OF ALL EXISTING CONCRETE ITEMS LOCATED IN THE AREA TO BE GRADED, INCLUDING, BUT NOT LIMITED TO THE FOLLOWING, SHALL BE INCLUDED IN THE PRICE BID FOR REGULAR EXCAVATION: CURB & GUTTER, SIDEWALK, ENTRANCES, PIPES

G-6 THE BORROW MATERIAL FOR THIS PROJECT SHALL BE A MINIMUM CBR 15 OR AS APPROVED BY THE MATERIALS ENGINEER.

DRAINAGE

D-1 THE HORIZONTAL LOCATION OF ALL DRAINAGE STRUCTURES SHOWN ON THESE PLANS IS APPROXIMATE ONLY, WITH THE EXCEPTION OF STRUCTURES SHOWING SPECIFIC STATIONS, SPECIAL DESIGN BRIDGES, AND STORM SEWER SYSTEMS.

D-2 THE HORIZONTAL LOCATION AND INVERT ELEVATIONS SHOWN FOR PROPOSED CULVERTS AND STORM SEWER OUTFALL PIPES ARE BASED ON EXISTING SURVEY DATA AND REQUIRED DESIGN CRITERIA. IF, DURING CONSTRUCTION, IT IS FOUND THAT THE HORIZONTAL LOCATION OR INVERT ELEVATIONS SHOWN ON THE PLANS DIFFER SIGNIFICANTLY FROM THE HORIZONTAL LOCATION OR ELEVATIONS OF THE STREAM OR SWALE IN WHICH THE CULVERT OR STORM SEWER OUTFALL PIPE IS TO BE PLACED, THE ENGINEER SHALL CONFER WITH, AND GET APPROVAL FROM, THE APPLICABLE DISTRICT DRAINAGE ENGINEER BEFORE INSTALLING THE CULVERT OR STORM SEWER OUTFALL PIPE.

D-3 THE "H" DIMENSIONS SHOWN ON THE PLANS FOR DROP INLETS AND JUNCTION BOXES AND THE "L.F." DIMENSIONS SHOWN FOR MANHOLES ARE FOR ESTIMATING PURPOSES AND ARE BASED ON THE PROPOSED INVERT ELEVATIONS SHOWN FOR THE STRUCTURE AND THE ANTICIPATED TOP (RIM) ELEVATION BASED ON EXISTING OR PROPOSED FINISH GRADE. THE ACTUAL "H" OR "L.F." DIMENSIONS ARE TO BE DETERMINED BY THE CONTRACTOR FROM FIELD CONDITIONS.

D-12 ALL EXISTING DRAINAGE FACILITIES LABELED "TO BE ABANDONED" SHALL BE LEFT IN PLACE, BACKFILLED AND PLUGGED IN ACCORDANCE WITH THE VDOT ROAD AND BRIDGE STANDARD PP-1. BASIS OF PAYMENT WILL BE C.Y. OF FLOWABLE BACKFILL.

D-13 EXISTING DRAINAGE FACILITIES BEING UTILIZED AS A PART OF THE DRAINAGE SYSTEM, AND DESIGNATED ON THE PLANS "TO BE CLEANED OUT", SHALL BE CLEANED AS DIRECTED BY THE ENGINEER. THE COST INCIDENTAL TO THIS SHALL BE INCLUDED IN THE CONTRACT PRICE FOR OTHER ITEMS.

D-14 PROPOSED DROP INLETS WITH A HEIGHT (H) LESS THAN THE STANDARD MINIMUM SHOWN IN THE VDOT ROAD AND BRIDGE STANDARDS SHALL BE CONSIDERED AND PAID FOR AS STANDARD DROP INLETS FOR THE TYPE SPECIFIED. PIPES WITH LESS THAN STANDARD MINIMUM FINISHED HEIGHT OF COVER SHALL BE NOTED AS SUCH IN THE DRAINAGE DESCRIPTION FOR THE PIPE. SPECIFIC PIPE BEDDING AND COVER REQUIREMENTS ARE PROVIDED N THE APPLICABLE PB-1 AND PC-1 STANDARD DRAWINGS OF THE VDOT ROAD AND BRIDGE STANDARDS.

D-17 ST'D. SL-1 SAFETY SLAB LOCATIONS ARE BASED ON THE ASSUMED USE OF PRECAST STRUCTURES. IF CAST-IN-PLACE STRUCTURES ARE UTILIZED, AND THE INTERIOR CHAMBER DIMENSIONS (LENGTH AND WIDTH, OR DIAMETER) ARE LESS THAN 4 FEET, THE SAFETY SLABS SHALL NOT BE INSTALLED.

PAVEMENT

P-2 THE PAVEMENT MATERIALS ON THIS PROJECT WILL BE PAID FOR ON A TONNAGE BASIS. THE WEIGHT WILL VARY IN ACCORDANCE WITH THE SPECIFIC GRAVITY OF THE AGGREGATES AND THE ASPHALTIC CONTENT OF THE MIX ACTUALLY USED TO SECURE THE DESIGN DEPTH. THE WEIGHT OF THE ASPHALT CONCRETE IS BASED ON 95% OF THEORETICAL MAXIMUM DENSITY. (SEE IIM-LD-158)

INCIDENTAL

I-8A CLEARING AND GRUBBING SHALL BE CONFINED TO THOSE AREAS NEEDED FOR CONSTRUCTION. NO TREES OR SHRUBS IN UNGRADED AREAS SHALL BE CUT WITHOUT THE PERMISSION OF THE ENGINEER.

I-9 WHEN NO CENTERLINE ALIGNMENT IS SHOWN FOR A PROPOSED ENTRANCE, THE ENTRANCE SHALL BE CONSTRUCTED IN THE SAME LOCATION AS THE EXISTING ENTRANCE.

I-16 THE "UNDERGROUND UTILITIES" SURVEY DATA ON THIS PROJECT HAS BEEN PROVIDED BY CONSULTANT AND COPIES ARE AVAILABLE FROM THE DEPARTMENT.

EROSION AND SEDIMENT CONTROL (ESC)

E-2 ROCK FOR CHECK DAMS, INLET PROTECTION, EROSION CONTROL STONE, AND RIPRAP SHALL BE IN ACCORDANCE WITH SECTION 203 AND SECTION 414 OF THE APPLICABLE VDOT ROAD AND BRIDGE SPECIFICATIONS.

No.	REVISIONS	DATE

Kimley-Horn

© 2016 KIMLEY-HORN AND ASSOCIATES, INC.
4500 MAIN STREET, SUITE 500, VIRGINIA BEACH, VA 23462
PHONE: 757-213-8600 FAX: 757-213-8601
WWW.KIMLEY-HORN.COM

Kimley-Horn and Associates, Inc.
Virginia Beach, Virginia
Roadway Engineer

KHA PROJECT	DATE	SCALE	DESIGNED BY	DRAWN BY	CHECKED BY
117019024	07/01/2016	AS SHOWN	APF	DFL	WFM

GENERAL NOTES

REALIGNMENT OF COLONIAL AVENUE

SUFFOLK VA

SHEET NUMBER
2

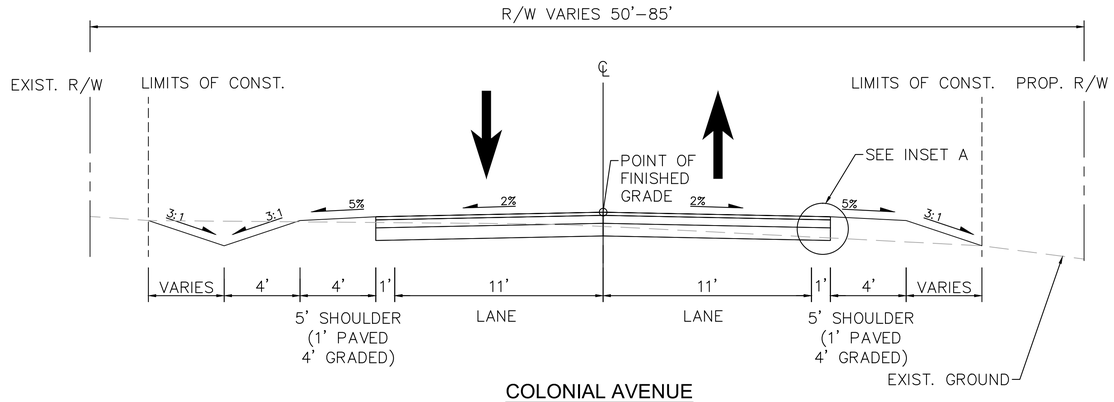

COLONIAL AVENUE

STA. 11+50 TO 13+00

N.T.S.

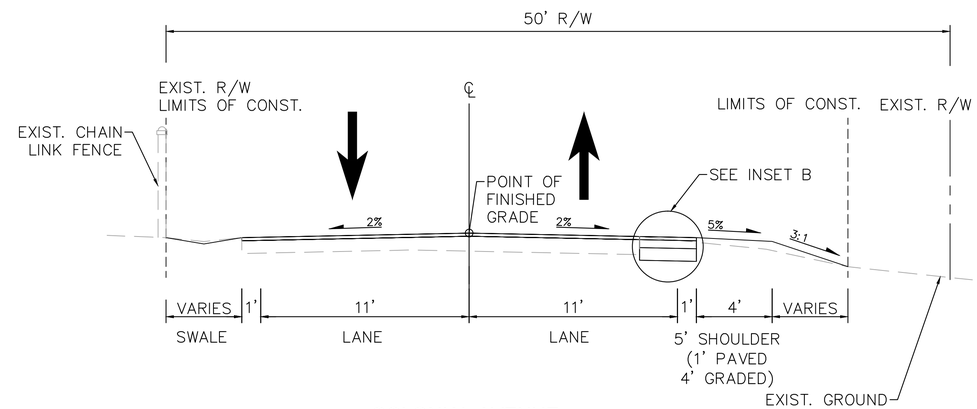

COLONIAL AVENUE

STA. 13+00 TO 14+00

N.T.S.

LEGEND:

1. 2" ASPHALT CONCRETE SURFACE MIX, TYPE SM-9.5A @ 220 LBS/SY
2. 5" ASPHALT CONCRETE BASE MIX, TYPE BM-25.0A @ 550 LBS/SY
3. 8" AGGREGATE SUBBASE, TYPE I, UNTREATED, SIZE 21-B
4. GEOTEXTILE FABRIC MIRAFI 500X
5. SUBGRADE, STABLE AND COMPACTED TO 95% STANDARD PROCTOR AND APPROVED BY THE GEOTECHNICAL ENGINEER
6. 2" TOPSOIL AND SEED
7. EXISTING PAVEMENT (MILL TOP 2" OF EXIST. ASPHALT)

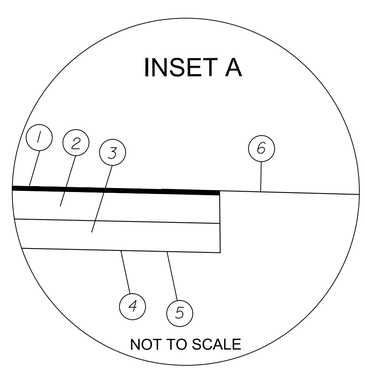

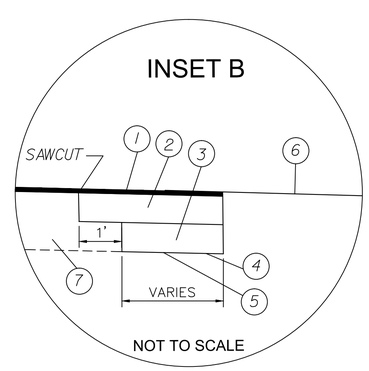

PRIVATE AND COMMERCIAL ENTRANCES

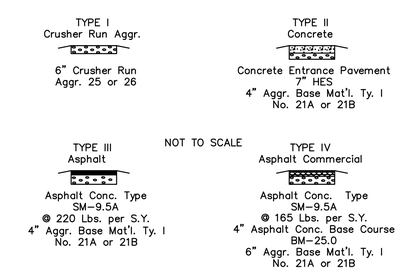

THE TYPE OF ENTRANCE (I, II, III, IV) TO BE CONSTRUCTED WILL BE DETERMINED BY THE EXISTING CONDITION AT THE TIME OF CONSTRUCTION.

No.	REVISIONS	DATE

Kimley»Horn

© 2016 KIMLEY-HORN AND ASSOCIATES, INC.

4500 MAIN STREET, SUITE 500, VIRGINIA BEACH, VA 23462
PHONE: 757-213-8600 FAX: 757-213-8601
WWW.KIMLEY-HORN.COM

Kimley-Horn and Associates, Inc.
Virginia Beach, Virginia
Roadway Engineer

KHA PROJECT 117019024

DATE	07/01/2016
SCALE	AS SHOWN
DESIGNED BY	APF
DRAWN BY	DFL
CHECKED BY	WFM

TYPICAL SECTIONS

REALIGNMENT OF COLONIAL AVENUE

SUFFOLK VA

SHEET NUMBER

2A

This document, together with the concepts and designs presented herein, as an instrument of service, is intended only for the specific purpose and client for which it was prepared. Reuse of and improper reliance on this document without written authorization and adaptation by Kimley-Horn and Associates, Inc. shall be without liability to Kimley-Horn and Associates, Inc.

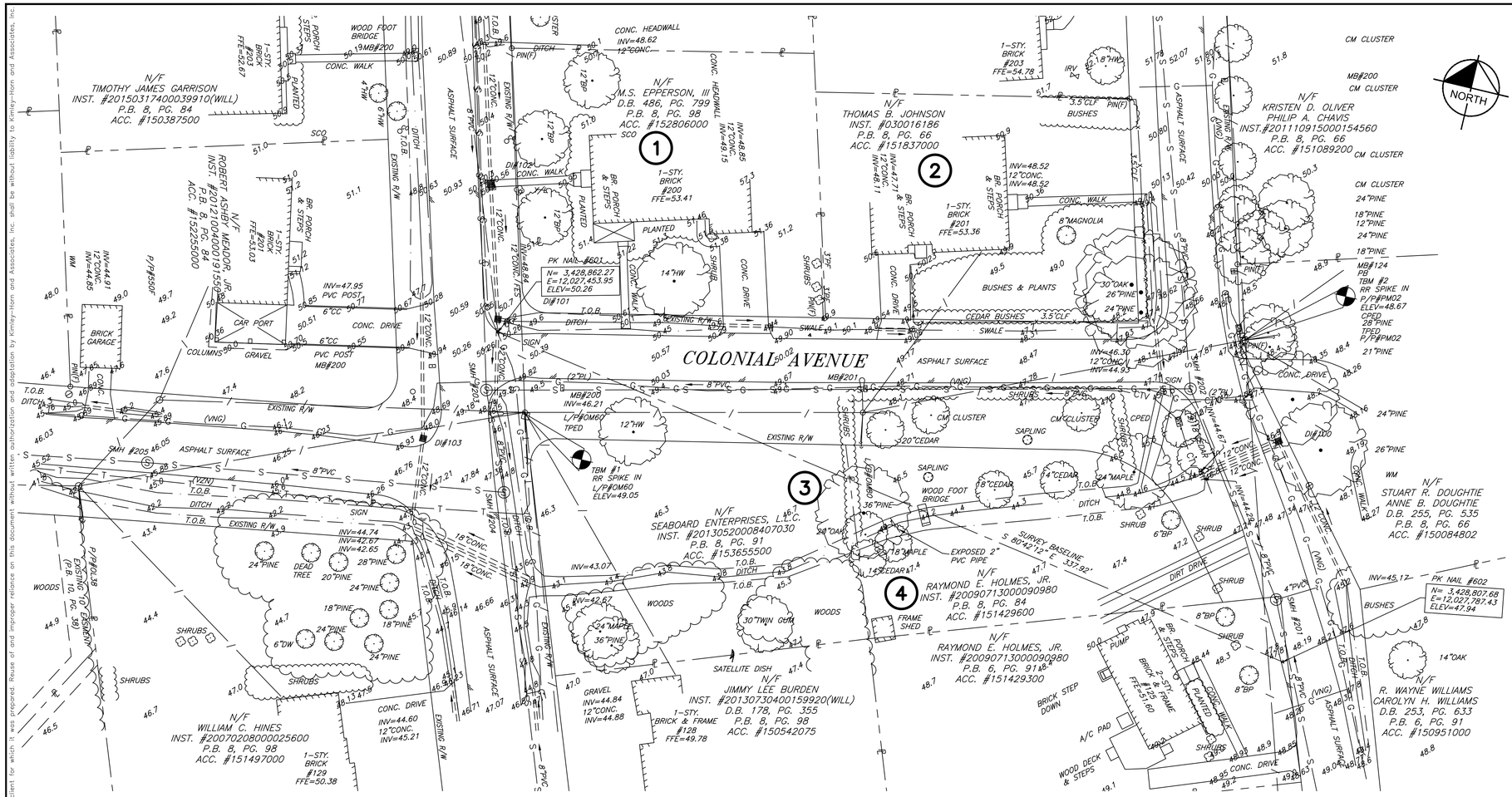

LEGEND

SCO	SANITARY SEWER CLEANOUT
SMH	SANITARY SEWER MANHOLE
WM	WATER METER
	TRAVERSE POINT
	TREE
	SHRUB
P/P	POWER POLE
L/P	LIGHT POLE
Y/L	YARD LIGHT
	BOLLARD
	GUY WIRE
	SIGN
MB	MAILBOX
TBM	TEMPORARY BENCH MARK
CPED	CABLE PEDESTAL
TPED	TELEPHONE PEDESTAL
DI	DROP INLET
/	OVERHEAD WIRES
PF	PLASTIC FENCE
CLF	CHAIN LINK FENCE
T	UNDERGROUND TELEPHONE
CTV	UNDERGROUND CABLE
G	UNDERGROUND GAS
S	SANITARY SEWER PIPE
HW	HARD WOOD
BP	BRADFORD PEAR
CM	CREEP MYRTLE
PL	PLASTIC
PVC	POLYVINYL CHLORIDE
T.O.B.	TOP OF BANK
T.O.S.	TOE OF SLOPE
(VNG)	VIRGINIA NATURAL GAS
(VZN)	VERIZON

STORM STRUCTURE DATA

DI #100
RIM=46.66
INV=44.49(SW)
INV=44.44(SW)
INV=44.54(SE)

DI#101
RIM=49.83
INV=48.26(E)
INV=47.67(SE)
INV=47.72(NW)

DI#102
RIM=50.25
INV=48.36(SE)
UNABLE TO GET
(NW) INVERT

DI#103
RIM=46.84
INV=45.71(NW)
INV=45.54(S)

SANITARY SEWER STRUCTURE DATA

SMH #200
RIM=49.45
INV=43.61(NW)
INV=43.68(SE)

SMH #201
RIM=47.75
INV=41.98(NW)
INV=43.50(NE)
INV=42.05(SE)

SMH #202
RIM=47.62
INV=40.78(NW)
INV=40.69(SW)
INV=40.78(SE)

SMH #203
RIM=49.42
INV=39.98(NW)
INV=39.57(NE)
INV=39.55(SE)

SMH #204
RIM=46.81
INV=39.02(NW)
IN=38.99(SW)
INV=39.14(SE)

SMH #205
RIM=4.96
INV=38.42(NE)
INV=38.32(SW)

SMH #206
RIM=45.67
INV=38.52(NW)
INV=37.48(NE)
INV=37.45(SW)

SMH #207
RIM=56.30
INV=38.42(NW)
INV=38.32(SE)

SMH #208
RIM=54.62
INV=48.19(NW)
INV=48.27(SE)

SMH #209
RIM=54.37
INV=-48.51(NW)
INV=48.48(SE)

SURVEY NOTES:

1. THE MERIDIAN SOURCE OF THIS TOPOGRAPHIC SURVEY IS BASED ON THE CITY OF SUFFOLK GEODETIC CONTROL NETWORK, VIRGINIA STATE PLANE COORDINATE SYSTEM, SOUTH ZONE, NORTH AMERICAN DATUM 1983(1994).
2. ELEVATIONS REFER TO NAVD88 AND WERE ESTABLISHED USING DIFFERENTIAL LEVELING METHODS INITIATED AT CITY OF SUFFOLK CONTROL DISK #147.
3. THIS SURVEY WAS PREPARED TO SHOW EXISTING FEATURES AS OF 06/03/2016 AND DOES NOT CERTIFY TO CHANGES TO SITE CONDITIONS WHICH OCCUR SUBSEQUENT TO THIS DATE AND OR TO PROPOSED IMPROVEMENTS.
4. THIS SURVEY DOES NOT CONSTITUTE A BOUNDARY SURVEY NOR A SUBDIVISION OF LAND.
5. PROPERTY AND RIGHT-OF-WAY LINES WERE ESTABLISHED USING A COMPILATION OF DEEDS OF RECORD, PLATS OF RECORD AND EXISTING FIELD MEASUREMENTS.
6. THIS SURVEY DOES NOT INTEND TO DEPICT ANY WETLANDS, HAZARDOUS WASTE AND ENVIRONMENTAL FEATURES THAT MAY AFFECT SAID PROPERTY.
7. PIPE MATERIAL TYPES ARE DETERMINED BY FIELD OBSERVATIONS TO THE BEST OF OUR ABILITY. PMI DOES NOT WARRANT THE MATERIAL TYPE OF PIPES LOCATED IN CONFINED OR INACCESSIBLE SPACES.
8. THE TOPOGRAPHY AND PHYSICAL FEATURES SHOWN ON THIS MAP WERE OBTAINED UNDER THE DIRECT AND RESPONSIBLE CHARGE AND SUPERVISION OF IVAN R. LINEBERRY. THIS PLAT, MAP, OR DIGITAL GEOSPATIAL DATA INCLUDING METADATA MEETS MINIMUM ACCURACY STANDARDS UNLESS OTHERWISE NOTED.
9. PRECISION MEASUREMENTS, INC, DOES NOT GUARANTEE THAT UTILITIES SHOWN COMPRISE ALL UTILITIES WITHIN THE PROJECT LIMITS.
10. "THE UNDERGROUND UTILITIES SHOWN, IF ANY, HAVE BEEN DESIGNATED BY "MISS-UTILITY" AND THE PAINT DESIGNATION LINES HAVE BEEN LOCATED IN THE FIELD. THE SURVEYOR MAKES NO GUARANTEE THAT THE UNDERGROUND UTILITIES SHOWN COMPRISE ALL SUCH UTILITIES IN THE AREA, EITHER IN SERVICE OR ABANDONED. THE SURVEYOR FURTHER DOES NOT WARRANT THAT THE UNDERGROUND UTILITIES SHOWN ARE IN THE EXACT LOCATION INDICATED, ALTHOUGH HE DOES CERTIFY THAT THEY ARE LOCATED AS ACCURATELY AS POSSIBLE FROM THE INFORMATION AVAILABLE. THE SURVEYOR HAS NOT PHYSICALLY LOCATED THE UNDERGROUND UTILITIES". THE SURVEYOR FURTHER NOTIFIES ALL PARTIES THAT VIRGINIA LAW REQUIRES "MISS-UTILITY" TO BE CONTACTED PRIOR TO ANY EXCAVATION.
11. UTILITY SIZE AND MATERIAL INFORMATION TAKEN FROM AVAILABLE RECORDS.
12. THIS TOPOGRAPHIC SURVEY WAS PREPARED/COMPILED BY:

PRECISION MEASUREMENTS, INC.
SURVEYORS – GPS – GIS – MAPPING – 3-D LASER SCANNING
851 SEAHAWK CIRCLE, SUITE 103
VIRGINIA BEACH, VA. 23452
(757) 368-0945
WWW.PRECISIONMEASUREMENTS.COM
VIRGINIA BEACH – NEWPORT NEWS – RICHMOND, VIRGINIA

No.	REVISIONS	DATE

Kimley»Horn
© 2016 KIMLEY-HORN AND ASSOCIATES, INC.
4500 MAIN STREET, SUITE 500, VIRGINIA BEACH, VA 23462
PHONE: 757-213-8600 FAX: 757-213-8601
WWW.KIMLEY-HORN.COM

Precision Measurements, Inc.
Virginia Beach, Virginia
Land Surveyor

KHA PROJECT 117019024
DATE 07/01/2016
SCALE AS SHOWN
DESIGNED BY APF
DRAWN BY DFL
CHECKED BY WFM

EXISTING CONDITIONS

REALIGNMENT OF COLONIAL AVENUE

SUFFOLK VA

SHEET NUMBER 3

This document, together with the concepts and designs presented herein, as an instrument of service, is intended only for the specific purpose and client for which it was prepared. Reuse of and improper reliance on this document without written authorization and adaptation by Kimley-Horn and Associates, Inc. shall be without liability to Kimley-Horn and Associates, Inc.

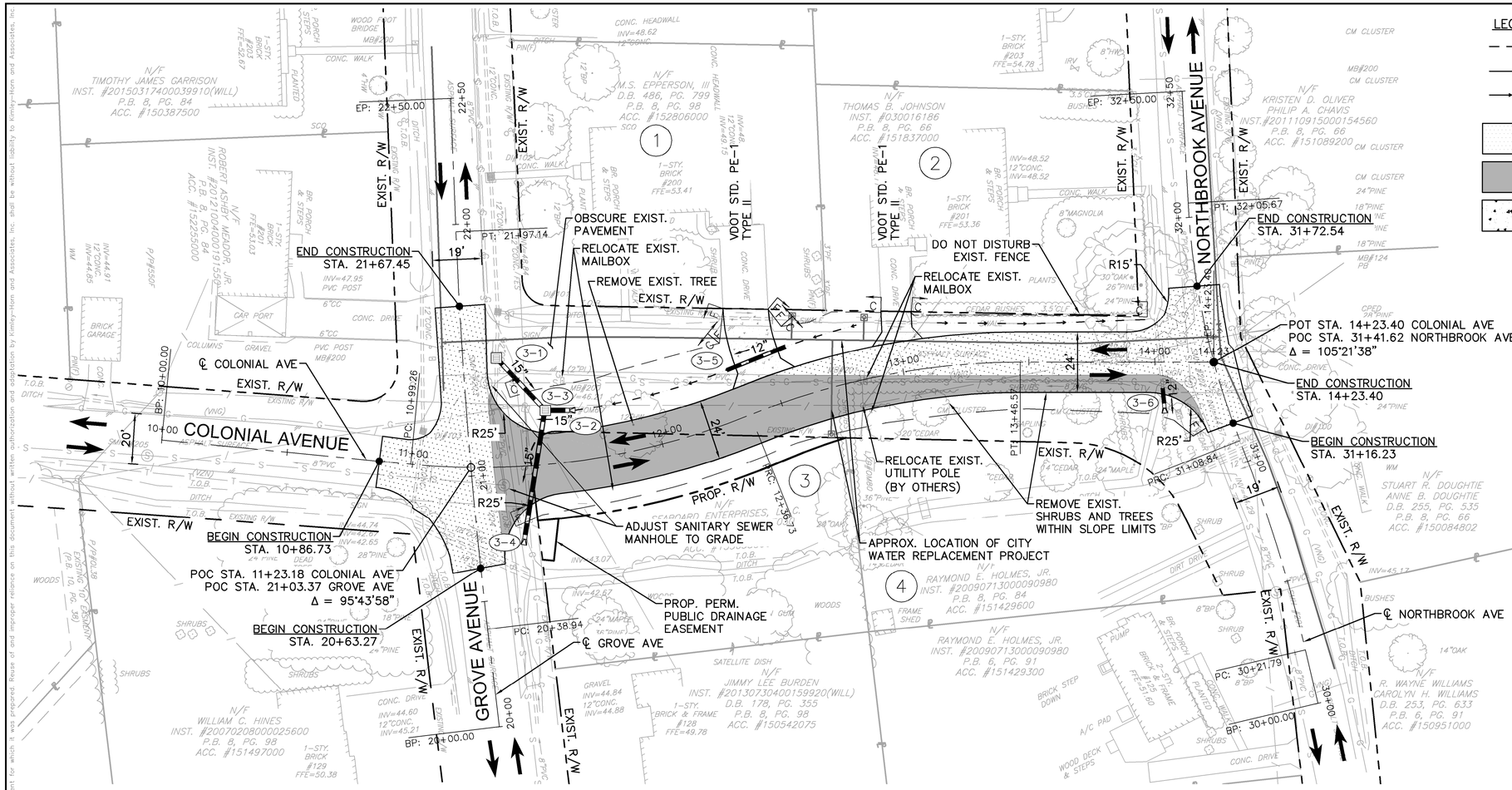

LEGEND

- CUT LINE
- FILL LINE
- PROP. DITCH
- DENOTES EXISTING PAVEMENT MILL & ASPHALT OVERLAY
- DENOTES PROPOSED ASPHALT PAVEMENT
- DENOTES PROPOSED CONCRETE PAVEMENT

DRAINAGE DESCRIPTIONS

(3-1) 1 STD. DI-1 REQ'D.
PROP. TOP ELEV. 49.9
TIE TO EXIST. 12" PIPE
STD. IS-1 REQ'D.

(3-1) TO (3-3) 28'-15" CONC. PIPE CLASS III REQ'D. (1' COVER)
INV. (IN) 46.9 INV. (OUT) 44.5

(3-2) 1 STD. 15" ES-1 REQ'D.
INV. 45.8

(3-2) TO (3-3) 10'-15" CONC. PIPE CLASS III REQ'D. (2' COVER)
INV. (IN) 45.8 INV. (OUT) 44.5

(3-3) 1 STD. DI-1 REQ'D.
H = 3.0' INV. 44.0
STD. IS-1 REQ'D.

(3-3) TO (3-4) 50'-15" CONC. PIPE CLASS III REQ'D. (2' COVER)
INV. (IN) 44.0 INV. (OUT) 43.8

(3-4) 1 STD. 15" ES-1 REQ'D.
INV. 43.8

(3-5) 25'-12" CONC. PIPE CLASS III REQ'D. (1' COVER)
INV. (IN) 47.2 INV. (OUT) 46.8

(3-6) EXISTING PIPE TO BE EXTENDED WITH
6'-12" CONC. PIPE CLASS III (2' COVER)
INV. (IN) 44.9 INV. (OUT) 44.6
1 STD. ES-1 REQ'D.

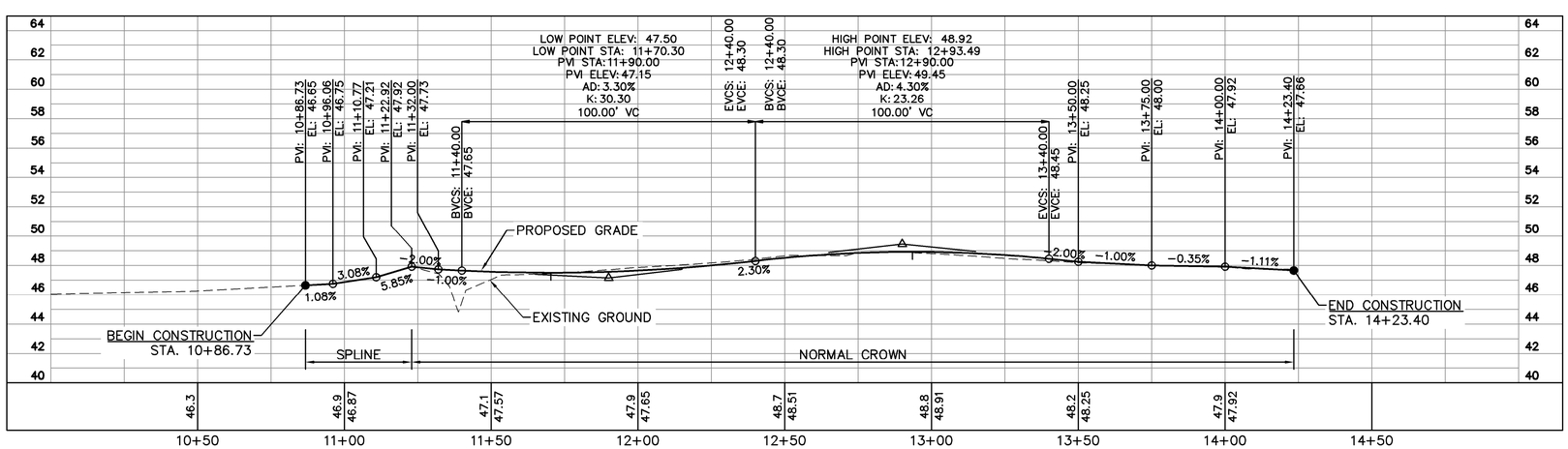

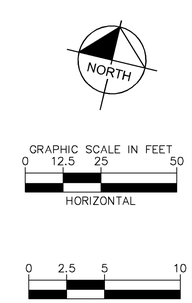

No.	REVISIONS	DATE

Kimley»Horn

© 2016 KIMLEY-HORN AND ASSOCIATES, INC.
4500 MAIN STREET, SUITE 500, VIRGINIA BEACH, VA 23462
PHONE: 757-213-8600 FAX: 757-213-8601
WWW.KIMLEY-HORN.COM

Kimley-Horn and Associates, Inc.
Virginia Beach, Virginia
Roadway Engineer

KHA PROJECT	117019024
DATE	07/01/2016
SCALE	AS SHOWN
DESIGNED BY	APF
DRAWN BY	DFL
CHECKED BY	WFM

ROADWAY PLAN AND PROFILE

REALIGNMENT OF COLONIAL AVENUE

SUFFOLK VA

SHEET NUMBER
3A

This document, together with the concepts and designs presented herein, as an instrument of service, is intended only for the specific purpose and client for which it was prepared. Reuse of and improper reliance on this document without written authorization and adaptation by Kimley-Horn and Associates, Inc. shall be without liability to Kimley-Horn and Associates, Inc.