Public Facilities Manual

Volume II, 2017 Release 1

City of Suffolk Department of Public Utilities │442 W. Washington Street │Suffolk, Virginia 23434

CITY OF SUFFOLK, VIRGINIA
DEPARTMENT OF PUBLIC UTILITIES

PUBLIC FACILITIES MANUAL
VOLUME II

2017 RELEASE 1

Director of Public Utilities

4/14/17
Date

This page intentionally left blank.

TABLE OF CONTENTS

2017 RELEASE 1

This page intentionally left blank.

1.0 INTRODUCTION

1.1 GENERAL

1.2 INTENT

1.3 USE OF THIS MANUAL

1.4 AMENDMENTS

1.5 SEVERABILITY

1.6 REGULATORY REQUIREMENTS AND STANDARDS

1.6.1 CITY CODE

1.6.2 UNIFIED DEVELOPMENT ORDINANCE

1.6.3 VIRGINIA DEPT. OF HEALTH WATERWORKS REGULATIONS

1.6.4 VIRGINIA DEPARTMENT OF ENVIRONMENTAL QUALITY SEWAGE COLLECTION AND TREATMENT (SCAT) REGULATIONS

1.6.5 CONSENT DECREE/RTS

1.6.6 CONFLICTING REGULATORY REQUIREMENTS

1.7 MANUAL ORGANIZATION

1.7.1 CHAPTER 1 – INTRODUCTION

1.7.2 CHAPTER 2 – GENERAL PROVISIONS

1.7.3 CHAPTER 3 – DESIGN

1.7.4 CHAPTER 4 – CONSTRUCTION

1.7.5 CHAPTER 5 – CROSS CONNECTION CONTROL

1.7.6 APPENDICES

2.0 GENERAL PROVISIONS

2.1 DEFINITIONS

2.2 ABBREVIATIONS

3.0 DESIGN

3.1 NEW DEVELOPMENT AND REDEVELOPMENT ENGINEERING/SITE PLAN AND PLAT REVIEW AND APPROVAL

3.1.1 PRE-SUBMITTAL MEETING

3.1.2 SUBMITTAL REVIEW PROCESS

3.1.3 WATER AND SEWER EASEMENTS AND PROPERTY DEDICATION

3.1.4 PERMITS, BONDS AND FEES

3.2 GENERAL DESIGN STANDARDS

3.3 DEPARTMENT OF PUBLIC UTILITIES REVIEW

3.3.1 ENGINEERING REPORTS

3.4 SEPARATION OF WATER LINES AND SANITARY AND STORM SEWER LINE FACILITIES

3.5 UTILITY LINES CROSSING RAILROADS AND MAJOR ROADWAYS

3.6 PROTECTION OF WATER SUPPLIES

3.7 BACKFILL AND COMPACTION

3.8 BACKFLOW PREVENTION

3.9 DESIGN STANDARDS FOR WATER DISTRIBUTION FACILITIES

3.9.1 GENERAL REQUIREMENTS

3.9.2 TECHNICAL DESIGN, WATER DISTRIBUTION FACILITIES

3.10 DESIGN STANDARDS FOR SANITARY COLLECTION FACILITIES

3.10.1 GENERAL REQUIREMENTS

3.10.2 SEWER COLLECTION FACILITIES (GRAVITY)

3.11 SANITARY SEWER PUMP STATIONS

3.11.1 GENERAL REQUIREMENTS

3.11.2 PUMP STATIONS

3.11.3 PUMP STATION ELECTRICAL

3.11.4 CAPACITY DESIGN

3.11.5 PUMP STATION STRUCTURAL DESIGN

3.11.6 PRIVATE GRINDER PUMP STATIONS

3.12 FORCE MAINS

4.0 CONSTRUCTION

4.1 PERMITS

4.2 TIME LIMITS

4.3 PRE-CONSTRUCTION PROCEDURES

4.4 COORDINATION

4.5 PROJECT MEETINGS

4.6 SUBMITTALS

4.7 MATERIALS AND EQUIPMENT

4.8 EXISTING CITY UTILITIES

4.9 EXISTING PRIVATE UTILITIES

4.10 SHUTDOWNS AND TIE-INS

4.11 EARTHWORK

4.11.1 GEOTECHNICAL SUBMITTALS

4.11.2 QUALITY ASSURANCE

4.11.3 PROJECT CONDITIONS

4.11.4 PRODUCTS

4.11.5 EXECUTION

4.12 DUCTILE IRON PIPE

4.13 PVC PIPE

4.14 RESTRAINED JOINTS

4.15 PIPE LAYING

4.16 SPECIAL CROSSINGS

4.17 VALVES AND HYDRANTS

4.18 WATER DISTRIBUTION SYSTEM

4.19 SANITARY SEWER SYSTEM

4.20 FIELD TESTS

4.21 START-UP AND DEMONSTRATION

4.22 PROJECT ACCEPTANCE REQUIREMENTS

4.23 PARTIAL POSSESSION

4.24 TRANSFERRING PROJECT OWNERSHIP TO THE CITY OF SUFFOLK

4.25 RECORD DRAWINGS

4.26 CONSTRUCTION BONDS RELEASE

5.0 CROSS CONNECTION CONTROL

5.1 PURPOSE

5.2 GENERAL PROHIBITION AGAINST CROSS CONNECTIONS

5.3 DEFINITIONS:

5.3.1 APPROVED

5.3.2 PRIVATE WATER SUPPLY

5.3.3 BACKFLOW

5.3.4 BACKFLOW DEVICE

5.3.5 BACKFLOW DEVICE TESTER

5.3.6 BACKPRESSURE

5.3.7 BACKSIPHONAGE

5.3.8 DEPARTMENT

5.3.9 RESPONSIBLE PARTY

5.3.10 CONTAINMENT

5.4 DESIGN

5.4.1 GENERAL

5.4.2 STANDARDS FOR BACKFLOW DEVICES

5.4.3 DETERMINATION OF DEGREE OF HAZARD

5.4.4 IRRIGATION SYSTEMS

5.4.5 FIRE SERVICE

5.4.6 CONSTRUCTION METER AND BACKFLOW DEVICE

5.4.7 BACKFLOW DEVICE SELECTION

5.5 INSTALLATION

5.5.1 LOCATION AND INSTALLATION REQUIREMENTS

5.5.2 TESTING REQUIREMENTS

5.6 MAINTENANCE

5.6.1 INSPECTIONS BY THE DEPARTMENT

5.6.2 NOTICE OF VIOLATION – FAILURE TO CORRECT VIOLATION

APPENDICES

APPENDIX A ABBREVIATIONS

APPENDIX B CHECK LISTS AND FORMS

B-1 PROJECT SUBMITTAL CHECK LIST

B-2 PLAN REVIEW CHECK LIST

B-3 WATER DISTRIBUTION SYSTEM ACCEPTANCE CHECK LIST

B-4 PRESSURE TEST FORM

B-5 SEWER SLOPES CHECK FORM

B-6 SEWER SYSTEM TEST FORM

B-7 SANITARY SEWER SYSTEM ACCEPTANCE CHECK LIST

B-8 FACTORY ACCEPTANCE TEST (FAT) CHECK LIST FOR SANITARY PUMP STATIONS

B-9A PRE- SITE ACCEPTANCE TEST (PRE-SAT) CHECK LIST FOR SANITARY PUMP STATIONS

B-9B SITE ACCEPTANCE TEST (SAT) CHECK LIST FOR SANITARY PUMP STATIONS

B-10 START-UP CHECK LIST FOR SANITARY PUMP STATIONS

B-11 STAND-BY POWER GENERATOR START-UP CHECK LIST

B-12 PUMP STATION ACCEPTANCE PROCEDURE

B-13 UTILITY FIELD CHANGE REQUEST FORM

APPENDIX C APPROVED PRODUCTS AND MATERIALS

APPENDIX D SAMPLE WATER SYSTEM AND SANITARY PUMP STATION MODEL DATA

APPENDIX E RECORD DRAWINGS

APPENDIX F STANDARD DETAILS

- SERIES 100 – WATER
- SERIES 200 – SANITARY
- SERIES 300 – WATER AND SANITARY
- SERIES 400 – PUMPING STATIONS

APPENDIX G PUMP STATIONS

- TYPE 1 – WET WELL / DRY WELL
- TYPE 2 - SUBMERSIBLE

APPENDIX H CONSTANT SPEED DRIVE SPECIFICATIONS AND DRAWINGS

- SPECIFICATIONS
  - 01300 – CS-FVNR STATION SUBMITTALS
  - 13010 – CS-FVNR STATION CONTROL SYSTEMS INTEGRATOR
  - 13341 – CS-FVNR STATION CONTROL SYSTEM HARDWARE
  - 13344 – CS-FVNR STATION INPUT/OUTPUT POINT LIST
  - 13347 – CS-FVNR STATION CONTROL SYSTEM DESCRIPTION
  - 13400 – CS-FVNR STATION SCADA SYSTEM
  - 13420 – CS-FVNR STATION INSTRUMENTATION
  - 16420 – CS-FVNR STATION INDIVIDUAL MOTOR STARTERS
- CONSTANT SPEED DRIVE DRAWINGS

APPENDIX I SOFT-START DRIVE SPECIFICATIONS AND DRAWINGS

- SPECIFICATIONS
  - 01301 – CS-SS STATION SUBMITTALS
  - 13011 – CS-SS STATION CONTROL SYSTEMS INTEGRATOR
  - 13342 – CS-SS STATION CONTROL SYSTEM HARDWARE
  - 13345 – CS-SS STATION INPUT/OUTPUT POINT LIST
  - 13348 – CS-SS STATION CONTROL SYSTEM DESCRIPTION
  - 13401 – CS-SS STATION SCADA SYSTEM
  - 13421 – CS-SS STATION INSTRUMENTATION
  - 16481 – CS-SS STATION SOLID STATE REDUCED VOLTAGE STARTER
- SOFT-START DRIVE DRAWINGS

APPENDIX J VARIABLE FREQUENCY DRIVE SPECIFICATIONS AND DRAWINGS

- SPECIFICATIONS
  - 01302 – VFD STATION SUBMITTALS
  - 13012 – VFD STATION CONTROL SYSTEMS INTEGRATOR
  - 13343 – VFD STATION CONTROL SYSTEM HARDWARE

- 13346 – VFD STATION INPUT/OUTPUT POINT LIST
- 13349 – VFD STATION CONTROL SYSTEM DESCRIPTION
- 13402 – VFD STATION SCADA SYSTEM
- 13422 – VFD STATION INSTRUMENTATION
- 16269 – VFD STATION VARIABLE FREQUENCY DRIVE

- VARIABLE FREQUENCY DRIVE DRAWINGS

APPENDIX K GENERATOR AND AUTOMATIC TRANSFER SWITCH SPECIFICATIONS

16231 – DIESEL ENGINE GENERATORS

16232 – NATURAL GAS ENGINE GENERATORS

16415 – AUTOMATIC TRANSFER SWITCHES

END OF SECTION

This page intentionally left blank.

CHAPTER 1

INTRODUCTION

2017 RELEASE 1

This page intentionally left blank.

1.0 INTRODUCTION

1.1 GENERAL

1. Volume I of the City of Suffolk Public Facilities Manual (PFM V-I) covers Public Works criteria and standards. This Public Facilities Manual, Volume II (PFM), provides City of Suffolk requirements and criteria for the planning, design and construction of water and wastewater facilities for the Department of Public Utilities (Department). This PFM also serves as a reference to other policies, procedures, and guidelines related to development, infrastructure rehabilitation, and capital improvement projects in the City of Suffolk.

2. This Public Facilities Manual Volume II supercedes and replaces in entirety the City of Suffolk Construction Specifications and Standards for Public Water and Sanitary Sewerage Facilities dated March 1995 and subsequent updates.

1.2 INTENT

1. The purpose of the Public Facilities Manual Volume II is to provide guidelines for acceptable design and construction standards for water and wastewater facilities. By providing this manual, the City strives to:

   A. Improve the design process;

   B. Provide flexible design parameters;

   C. Incorporate good engineering practices;

   D. Standardize construction specifications, standards and details, and

   E. Provide rehabilitation protocols.

2. The goal of this PFM is to standardize and improve the long-term viability, operation and maintenance of the City water and sewer systems. The users of this manual should use sound engineering judgment and quality construction practices to ensure public safety and quality water and sewer infrastructure.

3. This PFM is intended for use by regulatory agencies, design professionals, contractors and the City in the design, construction and maintenance of water and wastewater facilities.

4. In addition to this PFM, all installations shall be in strict accordance with the Virginia Waterworks Regulations, the Sewerage Collection And Treatment (SCAT) Regulations and the Consent Decree/RTS. No deviation from the PFM shall be allowed unless authorized by the Director of Public Utilities.

5. No statement nor regulation contained in this publication shall interfere with any additional requirements which may be imposed by the Commonwealth of Virginia/State Board of Health, Waterworks Regulations (WR), the Virginia Department Environmental Quality Sewage Collection and Treatment Regulations (SCAT), the Virginia Department Environmental Quality Regional Special Order By Consent (SOBC) or the U.S. Environmental Protection Agency Consent Decree (EPA CD). In the event of any variation between the Specifications and Standards in this PFM, and applicable rules, regulations and specifications of the WR, SCAT, SOBC, and EPA CD, it shall be understood that such rules, regulations and specifications of these State and federal agencies shall prevail for the Public Water Supply and Sanitary Sewerage Facilities within the City of Suffolk, Virginia. Exception shall be when City PFM Construction Specifications and Standards are more stringent than state requirements.

1.3 USE OF THIS MANUAL

1. Virginia State Law (*18 VAC 10-20-760*) and the City Code (UDO Article 5, Section 31-511 (a)) require the Engineer of Record to affix his seal to plans and specifications that he has either directly prepared or that were prepared under his direct supervision. The seal indicates that the Engineer of Record has had complete control and direction over, and accepts responsibility for, the sealed work.

2. Since the *City of Suffolk Public Facilities Manual Volume II (PFM)* was developed under the direction of the City of Suffolk Department of Public Utilities, the PFM Standard Drawings and Specifications contained therein are exempt from being required to be sealed, notwithstanding the requirements outlined below.

3. When the Engineer of Record prepares design documents for a specific project and incorporates the PFM Standard Specifications and Drawings into that design, the Engineer of Record's seal of the Project specifications and drawings represents his approval of the applicability of the PFM Standard Drawings and Specifications to the Project. Such sealed design documents shall conform to the following:

   a. The Engineer of Record is responsible for ensuring that the PFM Standard Specifications and Drawings are adequate and appropriate for the particular project.

   b. The Engineer of Record is responsible for providing any and all supplementary specifications or drawings that may be necessary to make a complete and workable project, as approved by the Department.

   c. The Engineer of Record (seal on particular plan sheets and specs) shall be of the appropriate engineering discipline for the work involved, e.g. electrical, structural, and/or civil/mechanical.

d. PFM Standard Specifications (appropriate sections) shall be included in the Construction Specifications as an Appendix. PDF electronic documents are available from the Engineering Division, Department of Public Utilities.

e. PFM Standard I&C Drawings shall be included in the Construction Drawings on 24" X 36" drawing sheets. PDF electronic files are available from the Engineering Division, Department of Public Utilities.

f. Supplemental Drawings shall be included which are project specific and which provide the necessary additional design information such as wire sizing, component selection and sizing, layout, mounting requirements, and other necessary detailed design information not otherwise incorporated into the PFM.

g. Supplemental Specifications shall be included which are project specific and which provide the necessary additional design information such as construction sequencing and other technical specifications relating to the scope of work for the project.

4. Modifications to the PFM Standard Specifications and Drawings shall not be made without the authorized consent of the Director of Public Utilities or his designee.

1.4 AMENDMENTS

This document may be revised and amended as deemed necessary by the Department. Electronic copies are available on the Department's website. Comments on this PFM may be sent to: **dpupfmcomments@suffolkva.us**.

1.5 SEVERABILITY

Should any section or provision of this PFM be declared by the courts to be unconstitutional or invalid, such decision will not affect the validity of the PFM as a whole, other than the part so declared to be unconstitutional or invalid. Any errors contained within this PFM will not relieve the user from the responsibility of adhering to and complying with all established City ordinances, policies and guidelines.

1.6 REGULATORY REQUIREMENTS AND STANDARDS

1.6.1 CITY CODE

General guidance, policies and procedures relating to the City's water and sewer infrastructure are contained in the City Code. This PFM provides the detailed guidance and technical requirements for these facilities.

1.6.2 UNIFIED DEVELOPMENT ORDINANCE

Unified Development Ordinance (UDO) design standards are reflected herein and are hereby made a part of this PFM.

1.6.3 VIRGINIA DEPT. OF HEALTH WATERWORKS REGULATIONS

All new water facilities including upgrades and extensions shall conform to the latest revisions of the Virginia Department of Health Waterworks Regulations.

1.6.4 VIRGINIA DEPARTMENT OF ENVIRONMENTAL QUALITY SEWAGE COLLECTION AND TREATMENT (SCAT) REGULATIONS

All new sewer facilities including upgrades and extensions shall conform to the latest version of the SCAT regulations, except as otherwise required by the Consent Decree/RTS.

1.6.5 CONSENT DECREE/RTS

All new sewer facilities including upgrades and extensions shall conform to the latest revisions of the Consent Decree/RTS.

1.6.6 CONFLICTING REGULATORY REQUIREMENTS

In the event of a conflict between this PFM, and applicable rules, regulations and specifications above, the appropriate State regulation shall apply except as noted above. An additional exception shall be when this PFM is more stringent than State requirements.

1.7 MANUAL ORGANIZATION

1.7.1 CHAPTER 1 – INTRODUCTION

Chapter 1 (this Chapter) provides general information regarding administrative items and a description of the overall PFM organization.

1.7.2 CHAPTER 2 – GENERAL PROVISIONS

Chapter 2 provides a list of definitions used throughout the PFM and directs the user to the abbreviations in Appendix A.

1.7.3 CHAPTER 3 – DESIGN

Chapter 3 provides a description of the submittal and review procedures, permits, bonds, easements, miscellaneous fees and costs, and design standards and requirements.

1.7.4 CHAPTER 4 – CONSTRUCTION

Chapter 4 provides construction requirements and procedures, including requirements for geotechnical, water distribution and sanitary sewer systems.

1.7.5 CHAPTER 5 – CROSS CONNECTION CONTROL

Chapter 5 provides the City's cross connection control and backflow prevention policies and procedures.

1.7.6 APPENDICES

A. Abbreviations

B. Check Lists and Forms

C. Approved Products and Materials

D. Sample Water and Sanitary Pump Station Model Data

E. Record Drawings

F. Standard Details

G. Pump Stations

H. Constant Speed Drive Controls Specifications and Drawings

I. Soft Start Drive Controls Specifications and Drawings

J. Variable Frequency Drive Controls Specifications and Drawings

K. Generator and Automatic Transfer Switch Specifications

END OF SECTION

This page intentionally left blank.

CHAPTER 2

GENERAL PROVISIONS

2017 RELEASE 1

This page intentionally left blank.

2.0 GENERAL PROVISIONS

2.1 DEFINITIONS

Terms used or referred to herein are defined as follows:

Acceptance of the Work – That action by which the City acknowledges that all provisions of the contract or permit have been fulfilled in all respects. In the event that a project is completed in defined phases, the City may elect to accept work in accordance with the defined project phases.

Accessories - All valves, blow offs, fittings, boxes, etc., other than pipe that are a part of the water or sewer system. Accessories are also referred to as *appurtenances*.

"Addendum" or "Addenda" – The additional contract provisions issued in writing prior to the receipt of bids.

ANSI – The American National Standards Institute (ANSI) shall mean the agency which has complied a consensus of material, specifications and processes that have been evaluated and approved for public usage.

Approved – When used in this PFM without further definition the words "by the Director of Public Utilities" shall be implied.

ASTM – The American Society of Testing Materials (ASTM) shall mean the agency that has conducted specific tests on materials for usage in specified systems.

AWWA – The American Water Works Association (AWWA) shall mean an association that has developed the minimum standard for product and services relating to water appurtenances.

Backflow – The reversal of flow of water, liquids, gases, or substances from its intended direction as a result of backsiphonage or backpressure.

Backflow Preventer – Any device or method used to prevent the backflow of water, liquids, gases or other substances into the potable distribution system.

Bedding – The layer of granular material, gravel, crushed rock or other approved suitable material supporting a pipe or structure in accordance with this PFM.

Building or Dwelling Unit – Building or dwelling unit means:

1. Any single-family residential structure; or

2. Any combination of structures owned by one person, or jointly by a number of persons as cotenants, joint tenants or tenants by the entireties and occupied as

a residence by a single family; or

3. Each separately owned, leased or occupied part of structures physically connected in a series, whether the series is vertical or horizontal, such as townhouses, condominiums, apartments, or physically connected commercial or industrial structures, etc.; or

4. Each apartment in or each separately leased or occupied part of or to be separately leased or occupied part of any multiple occupancy structure; or

5. Any single and separate structure owned by one person, or jointly by a number of persons as cotenants, joint tenants or tenants by the entireties and used by the owner or single lessee or occupant of the structure for commercial, governmental or industrial purposes; or

6. Any separate structure not classified in this definition is a building. The city reserves the right to determine the classification and use of any structure.

City – The City of Suffolk, Virginia, a municipal corporation organized and existing under the constitution of the laws of the Commonwealth of Virginia. City may also be the City's duly authorized representative, i.e. as in "inspected by the City".

City Code – Shall mean the code of the City of Suffolk, Virginia, the Charter and the General Ordinances including all supplements, latest edition.

Consent Decree – Means the enforcement action between the Virginia State Water Control Board and various Virginia cities, including Suffolk; counties; and HRSD identifying the actions required of each party to minimize SSOs, dated September 26, 2007 or as amended or replaced.

Consumer or Customer – The person legally or equitably responsible for the payment of charges for water and or sewerage services rendered by the City.

Contractor – Any person, firm, association or corporation that has an agreement for performing in whole or in part the construction, removal, repair or improvement of any water and sewer facilities intended for acceptance by the City.

Council – The Council of the City of Suffolk.

Cross-connection – Any connection or structural arrangement, direct or indirect, to the City's water distribution system whereby a backflow may occur.

Cross Connection Control Policies – Shall mean the policies and guidelines presented in this PFM.

Culvert – Any structure not classified as a bridge which provides an opening under any roadway, driveway or embankment.

Department of Public Utilities (DPU or Department) – The department of the City of Suffolk, Virginia, which represents the City in matters of review, approval and acceptance of public water and sewer facilities.

Developer – Person or persons who proposes an improvement(s) of zoned residential, commercial, industrial or public property in accordance with city land use, comprehensive and facilities planning.

Development – Means the development of zoned residential, commercial, industrial or public property in accordance with the city land use, comprehensive and facility planning.

Director of Public Utilities (Director) – The individual currently appointed to the position of Director of Public Utilities of the City of Suffolk with the responsibilities and authorities described in the City Code or his designee.

Distribution Main – A potable water main less than sixteen (16) inches in diameter.

Easement – A grant by a property owner to another, evidenced by a deed recorded with the Clerk of the Circuit Court, of the right to use the described land for a specific purpose. The term "easement" also includes a grant of a right to use property of an owner for specific, limited use or purpose.

Engineer – The Engineer shall mean the Engineer of Record (EOR). The Professional Engineer, registered in the Commonwealth of Virginia, responsible for the design of facilities to be constructed in accordance with the PFM. For purposes of regulatory approval, the Engineer may be designated as the Inspecting Engineer as defined in the applicable VDH and DEQ Regulations.

Equivalent Residential Unit (ERU) – Single family residence used in estimating wastewater per residence or used in projecting amount of wastewater generation used for design. Equivalent Residential Unit may also be referred to as Equivalent Dwelling Unit (EDU).

Extension – New sanitary sewer or water main connecting to an existing water main or sanitary sewer.

Fats, Oils & Grease (FOG) – Material, either liquid or solid, composed of fats, oils or grease from animal or vegetable sources. Examples of FOG include, but are not limited to, kitchen cooking grease, vegetable oil, bacon grease and organic polar compounds derived from animal and/or plant sources that contain multiple carbon triglyceride molecules. These substances are detectable and measurable using analytical test procedures established in the United States Code of Federal Regulations at 40 CFR Part

136, as may be amended from time to time. FOG may be referred to herein as "grease" or "greases".

Fire Protection System – The private water mains, pipes, hydrants, sprinklers and other facilities on the premise.

Food Service Establishment (FSE) – Any commercial, industrial, institutional, or food processing facility discharging kitchen or food preparation wastewaters including, but not limited to, restaurants, commercial kitchens, caterers, motels, hotels, cafeterias, correctional facilities, prisons or jails, cafeterias, care institutions, hospitals, schools, bars and churches. Any establishment engaged in preparing, serving, or otherwise making food available for consumption by the public shall be included. Such establishments use one or more of the following preparation activities: cooking by frying (all methods), baking (all methods), grilling, sautéing, rotisserie, cooking, broiling, boiling, blanching, roasting, toasting, or poaching. Also included are infrared heating, searing, barbequing, and other food preparation activity that produces a hot, non-drinkable food product in or on a receptacle that requires washing.

Force Main – A force main is any pressure pipe that carries discharge (domestic, commercial or industrial) from a sanitary sewer pump station to a City or HRSD owned force main, gravity sanitary sewer, or sanitary manhole.

Grease Control Device (GCD) – A device used to collect, contain, or remove food waste and grease from the wastewater while allowing the remaining wastewater to be discharged to the City's sanitary sewer system by gravity. Devices include grease interceptors, grease traps, automatic grease removal devices and other devices approved by the Director of Public Utilities.

Grease Interceptor – A structure or device, usually located underground and outside a FSE, designed to collect, separate and contain food waste and grease while allowing the wastewater to be discharged to the City's sanitary sewer system.

Grease Removal Device – An active, automatic device that separates and removes FOG from effluent discharge and that cleans itself of accumulated FOG at least once every twenty-four (24) hours utilizing electromechanical apparatus.

Grease Trap – A device typically located indoors and under the sink or in the floor, designed for separating and containing grease prior to the wastewater exiting the trap and entering the sanitary sewer system. Such devices are typically passive (gravity fed) and compact with removable baffles.

Guarantee Period – One (1) year following the date of final acceptance of the work by the City unless otherwise specified. The guarantee period may also be referred to as the defect period.

Hampton Roads Planning District Commission (HRPDC) – A political subdivision of the State as set out in the Code of Virginia, Section 15.2-4207.

Hampton Roads Sanitation District (HRSD) – A body corporate and politic, created by virtue of Chapter 407 of The Acts of Assembly of 1940 of Virginia, and charged with the responsibility to provide sewage treatment services for the communities in the Hampton Roads metropolitan area.

Hampton Roads Utility Billing System (HRUBS) – The utility billing system by which the City of Suffolk issues its public service bills for water and/or sewer service.

Industrial Wastewater – Any non-residential discharge to the City sanitary sewer system as defined by the HRSD Industrial Wastewater Discharge Regulations dated July 1, 2012 or as amended.

Infiltration and Inflow (I/I) – Groundwater or stormwater entering a sanitary sewer collection facility.

Inspector – The person designated by the Department of Public Utilities whose duty is to observe and ensure that the work is performed in accordance with the approved plans and specifications.

Interceptor – Gravity or pressure sanitary sewer serving as the backbone of a sewerage system transferring sewage to a specific end location. Interceptor sewer may also be referred to as trunk sewer. For the purposes of this document interceptor shall refer to facilities owned and operated by HRSD.

Invert – The lowest point in the internal cross-section of a pipe or a related structure.

Lateral – Pipe and facilities required to transmit sewage from the home or building to the public sanitary sewer main.

Main – The pipe intended for distribution or transmission of potable water or collection and conveyance of sewage to a sanitary sewage facility.

National Sanitation Foundation (NSF) – A set of standards developed that are accredited by ANSI for materials and products used in specified water and wastewater systems.

Notice to Proceed – A written notice to the Contractor of the date on which he shall begin the prosecution of the work and the time within which it shall be completed.

Occupational Safety and Health Administration (OSHA) – Federal law established set of standards and training enforcing safe working conditions for all persons.

Owner/Developer – The Owner/Developer shall mean any person, firm, corporation or

association having an interest, whether legal or equitable, sole or partial, in any parcel or premises which is, or may in the future be responsible for the design and construction of facilities to be under the jurisdiction of the City and to become a part of the public utilities system.

Performance Bond – Shall be the bond or surety required by the City for the construction period as a guarantee of good faith on the part of the Contractor to execute the work in accordance with the terms of the Contract.

Planning Department – The City of Suffolk Department of Planning and Community Development.

Plans – The drawings that graphically depict the work as approved by the Department.

Preliminary Engineering Report (PER) or Engineering Report – Document required prior to design and construction of water and sanitary sewerage facilities which may describe, at a minimum, existing facilities, improvements, future needs, possible alternatives, associated environmental impacts, permitting requirements and costs.

Premise(s) – Land, building or other structure and appurtenances thereto which is or may be served by City public water and/or sewer.

Public Utilities Department (Department) – The City of Suffolk Department of Public Utilities.

Public Utilities Easement – A perpetual and exclusive easement, right-of-way and privilege for the purposes of constructing, renewing and repairing, upgrading and otherwise operating and maintaining public water and/or sewer infrastructure, generally including but not limited to water and/or sanitary sewer mains, sewer force mains, public portions of laterals and service lines, associated pipes, vaults, structures, hydrants, meters, and cleanouts and appurtenances under and across a certain parcel of land.

Regional Standards – The Hampton Roads Planning District Commission Regional Construction Standards.

Regional Technical Standards (RTS) – Regional Technical Standards to the Consent Decree issued to HRSD and the localities in Hampton Roads by the Virginia State Water Control Board.

Right of Way – Land reserved, used or to be used for a highway, street, alley, walkway, drainage facility, or other public purpose. The right-of-way includes the total width of land dedicated or reserved for public or restricted travel, including appurtenant facilities located therein, such as pavement, ditches, curbing, gutters, bikeways, sidewalks, shoulders, and sufficient land for the maintenance thereof. The term “right-of-way” also includes the land, property, or interest therein, usually in a strip, acquired for or devoted to a public street designated to become part of the secondary system of state highways.

Sanitary Sewer or Sewer Main – Pipe or conduit intended for sewage collection or conveyance, which may be private or owned by the City.

Sewerage System or Sewage Collection System – A system consisting of gravity sewers, pumping stations and force mains and all other construction, devices and appliances appurtenant thereto, used for the collection and conveyance of sewage to a treatment works or point of ultimate disposal.

Sewage – Water carrying sanitary waste from residences, businesses, buildings, institutions, and industrial establishments. Roof drains, foundation drains, basement drains, or surface or subsurface drains shall not be classified as sewage and shall not be allowed to connect to any sewage system.

Sewage Collection and Treatment Regulations (SCAT) – Shall mean the regulations adopted by the Commonwealth of Virginia/State Water Control Board/Department of Environmental Quality (DEQ) and authorized by Title 32.1 - 164 and 62.1-44.19 of the Code of Virginia, as amended latest edition.

Force Main or Sanitary Force Main – A sanitary sewer or pipe that conveys sewage under pressure imparted by a pump or pumping system.

Sewer System – All facilities operated and maintained by the Public Utilities Department collecting and conveying sewage.

Sanitary Sewer Overflow (SSO) – Is defined by the RTS as "the unauthorized intentional or unintentional spill, release, or discharge to waters of the State of untreated wastewater from any portion of a sanitary sewer system before the headworks of a Wastewater Treatment Facility."

Special Provisions – Special directions, provisions or requirements peculiar to the project under consideration and not otherwise detailed or set forth in the specifications. Special provisions shall prevail over specifications or supplemental specifications and plans whenever in conflict therewith.

Specifications – Documents describing the work and setting forth the types and qualities of materials and equipment, the methods of installation of such materials and equipment, and the results to be achieved.

Stub-Out – A short extension of a water main or sewer main including all appurtenances intended to allow a later extension of the main.

Subcontractor – A person, partnership or corporation to whom the Contractor sublets part of the work.

Superintendent – The representative of the Contractor responsible for supervision and direction of construction in accordance with the approved plans and specifications or as otherwise directed by the Department of Public Utilities.

Tie-in – Connection of new facilities to existing facilities.

Transmission Main – A potable water main sixteen (16) inches in diameter or larger.

Unified Development Ordinance (UDO) – Shall mean the document used to improve the public health, safety, convenience and welfare of the citizens of the City of Suffolk while responding uniformly and consistently to development proposals, which furthermore pertaining to this PFM, establishes development standards for public facilities identifying design and installation standards for water and sanitary sewer systems.

Virginia Department of Health (VDH) – Virginia Department of Health.

Virginia Department of Transportation (VDOT) – The Virginia Department of Transportation.

Virginia Erosion and Sediment Control (VESC) Handbook – The publication authorized by Section 34-32, Code of Virginia, latest edition, to control land disturbing activities.

Warranty – A written guarantee of the quality of a product or equipment including a guarantee of repair or replacement in the case of failure of the product or equipment within a specific time period.

Water Main – Any pipe extending within a public right-of-way parallel or nearly parallel to the line of abutting property and usable for distribution of potable water purposes.

Water Service – Pipe and appurtenances required to furnish service from the water main to the meter owned and operated by the City.

Water System – All facilities operated and maintained by the Public Utilities Department supplying, pumping, treating and distributing water.

Waterworks Regulations – Shall mean the regulations adopted by the Commonwealth of Virginia/State Board of Health/Department of Health (VDH) and authorized by Title 32.1, Chapter 6, Article 2 of the Code of Virginia (1950) as amended latest edition.

Work – That which is proposed to be performed or constructed under the approved plans and specifications.

2.2 ABBREVIATIONS

Abbreviations used in these standards are defined in Appendix A.

END OF SECTION

This page intentionally left blank.

CHAPTER 3

DESIGN

2017 RELEASE 1

This page intentionally left blank.

3.0 DESIGN

3.1 NEW DEVELOPMENT AND REDEVELOPMENT ENGINEERING/SITE PLAN AND PLAT REVIEW AND APPROVAL

New development and redevelopment engineering plan and site plan review will be coordinated through Planning. The Department will coordinate with Planning and the Applicant for site plan submittals and design of water and sewer infrastructure. Applications, fee schedules and other associated documents are available on Planning's website.

3.1.1 PRE-SUBMITTAL MEETING

Prior to preparation of the formal Submittal, the Applicant may elect to meet with appropriate City Departments for a Pre-Submittal Meeting or meet with individual Departments. The meeting purpose is to allow the Applicant the opportunity to ask questions about the project and obtain information to enable the Applicant to prepare a more complete Submittal. The meeting is intended to provide the Applicant with general guidance in preparation of the plan Submittal. Any comments provided at the Meeting are intended to be general guidance for Submittal preparation**.**

3.1.2 SUBMITTAL REVIEW PROCESS

1. The Applicant will prepare and submit a package (Submittal) prepared in accordance with the requirements of Planning, City Code, UDO, RTS, PFM Volumes I and II and the SCAT Regulations (as applicable). The Submittal shall be made to Planning.

2. Residential grinder pump design shall be submitted to the Departments for review and approval.

3. In addition to the Submittal required by Planning, projects that include public water and sewer services shall include the following for the Department's purposes:

   A. Department's Project Submittal Check List (Appendix B-1) completed and signed by the Engineer of Record (Engineer).

   B. One (1) copy of engineering reports, geotechnical reports, engineering design calculations etc., signed and sealed by the Engineer. Engineering reports and calculations shall be in accordance with this PFM.

   C. Graphic and written descriptions of any required public utility or ingress/egress easement plats, as appropriate.

   D. In certain cases, HRSD and VDH plan review and approval may be required. Submit one (1) copy of comment review or approval letters from HRSD and VDH,

as appropriate. If Flow Acceptance is required for the project, provide Flow Acceptance forms and supplemental information for submittal by the Department. Where required, a Flow Acceptance letter from HRSD and a Certificate to Construct from DEQ shall be received by the Department prior to commencement of construction. Where required, a VDH Waterworks Construction Permit shall be provided to the Department prior to construction.

4. The Department will review the Submittal and send comments to Planning. Once Planning receives comments from all City departments, they will collate them into a single response letter sent to the Applicant.

5. The Applicant shall revise the Submittal to address the City's comments and resubmit to Planning with a letter explaining how each comment was addressed.

6. This submittal process continues until all comments have been addressed to the satisfaction of the City.

7. When all the Department requirements have been satisfied, the Department will forward an approval letter to Planning accordingly. The letter may contain additional information pertaining to the project or approval specifying additional conditions that shall be met before final City approval can be granted. Department Inspection Fees shall be paid prior to commencement of construction and will be part of the final approval letter.

8. Review of the design calculations, construction plans, and any other supporting information is strictly for conformance and general arrangement and does not relieve the Engineer of any errors or omissions contained in the Submittal. By its approval, the Department does not certify as to the correctness or completeness of the Submittal. The Department takes no professional responsibility or liability for the calculations or plans. The Engineer has the professional responsibility for the submittal.

9. Incomplete submittals will be returned to the Applicant and the review will not commence until all appropriate information is received by the Department. Department Plan Review Fees, in accordance with the current Fee Schedule shall be paid prior to commencement of review.

3.1.3 WATER AND SEWER EASEMENTS AND PROPERTY DEDICATION

1. Plats showing proposed water and sewer (permanent public utility) easements and property parcels to be conveyed for public water and sewer purposes, including ingress/egress easements, shall be submitted to the Department with the Engineer/Land Surveyor certification that the plats conform to the approved plans and any approved revisions. Any revisions to the approved plans shall be accompanied by the necessary revisions to the plats and the Engineer of Record's certification that the revised plats conform to the plan revisions prior to acceptance by the Department. Where sites are

proposed by the Applicant to be dedicated in fee simple to the City, such parcels shall be platted, deeded and recorded prior to acceptance by the Department.

2. Installation of trees, landscaping, shrubs, light posts, structures, buildings, stormwater facilities, BMPs, wetlands, berms or other obstructions, which prevent the proper installation, maintenance, rehabilitation, operation, inspection or removal of water and sewer facilities shall not be allowed within any permanent public utility easement, unless approved by the Department.

3. All Deed of Easement and Deed of Dedication documents submitted for approval shall be as required by the Department of Public Works Right-of-Way Agent.

4. Easement surveys shall be completed and easement plats prepared in all cases where proposed construction limits exceed the limits of public rights-of-way or the limits of City owned property. These surveys shall tie the lines of proposed construction to existing property lines and property corners, where the property may be identified by corners. In the absence of any such identification, the surveyor shall tie the survey to boundaries as set forth on existing plats and in descriptions.

5. Minimum easement widths shall be as shown in Table 3.1.3. Easement width shall be increased where more than one facility occupies an easement or based on site specific considerations.

6. Temporary construction easements may be required for public water and sewer facilities where work will be performed on private property.

7. The standard size of easement plats shall be as required by the City Right-of-Way Agent.

8. In cases where only public utility easements or fee simple property conveyance to the City is required, the easement agreement/deed of dedication and plat shall be submitted to the Department for review and approval. In these cases, recordation of the approved easement agreement/deed of dedication and plat is the responsibility of the Applicant and proof of recordation shall be provided to the Department prior to any request for acceptance of public water and/or sewer.

9. Sanitary gravity sewer easements terminating at a manhole shall extend ten (10) feet beyond the manhole to allow access for maintenance and repair.

10. Fire hydrants easements shall be a minimum of ten (10) feet wide centered along the pipe length from the City right-of-way and extending five (5) feet beyond the hydrant.

TABLE 3.1.3
PIPELINE UTILITY MINIMUM EASEMENT WIDTHS

PIPE DIAMETER (Inches)	MINIMUM PERMANENT EASEMENT WIDTH (Feet)	MINIMUM CONSTRUCTION EASEMENT WIDTH AND/OR MINIMUM PERMANENT EASEMENT WIDTH WHERE PIPE COVER IS OVER 10-FEET (Feet)
6 – 18	20	30
20 – 24	25	
30 – 42	30	

3.1.4 PERMITS, BONDS AND FEES

1. As provided in the City Code, it shall be the responsibility of the Applicant for any and all costs associated with a proposed project, including all permits, bonds and regulatory agency approvals required.

2. These costs may include, but not necessarily be limited to: plan review, approval costs, construction inspection costs, fees or charges for permits required by another jurisdictional body; costs of bacteriological samples (as applicable); and cost of soils and/or concrete tests.

3. The following Department fees (as applicable) shall be paid prior to the issuance of a building permit.

   A. Water and Sewer Connection Charge

   B. Water and Sewer Availability Charge

   C. HRSD Facility Charge

   D. Department Plan Review Fees (paid at time of plan submittal)

   E. Department Inspection Fees (paid prior to plan approval)

4. Miscellaneous additional fees may apply as listed in the City's current fee schedule.

3.2 GENERAL DESIGN STANDARDS

1. All water and sanitary sewer systems in the City of Suffolk, VA, shall be designed, constructed, operated, and maintained in accordance with this PFM and all associated

requirements identified herein. PFM requirements begin five (5) feet outside of the building structure.

2. All utility system designs, including all calculations, studies, reports, plans and related design materials, shall be signed and sealed by the Engineer.

3. All water and sanitary sewer designs and improvements shall conform to the latest revision of the VDH Waterworks Regulations, VDEQ Sewage Collection and Treatment (SCAT) Regulations, the Consent Decree Regional Technical Standards, the UDO, the City Code and PFM V-I & II, as applicable.

4. All designs shall conform to applicable Federal, State, and Local laws, regulations, codes and requirements, and HRSD Industrial Waste Regulations.

5. The Applicant shall be responsible for obtaining the review and necessary approvals by applicable Federal, State, and Local agencies having jurisdiction. Copies of such approvals shall be submitted to the Department.

6. All water and sewer facilities shall be designed, constructed, properly sized, and located appropriately to permit future public utility extensions as directed by the Department.

7. All plans shall include both plan and profile drawings for all current or proposed City owned water and sewer lines.

8. Utility Test Holes

   A. Test Holes shall be performed on existing Department assets wherever planned construction may have an impact on them. "Assets" include waterlines, force mains, gravity sewers, electrical lines, duct banks, storm sewer facilities, fuel lines or communication cables that serve City facilities. "Impact" includes connecting to, crossing over or under, or when construction excavation will be within five (5) feet of the utility. "Impact" under other circumstances may also require good engineering judgment. The Department may require additional Test Hole locations depending on Project complexities.

   B. Test Holes shall be performed by the air-vacuum excavation method in the City of Suffolk, Virginia. Test Holes performed using other construction equipment shall only be allowed upon approval in writing from the Department.

   C. Test Holes shall be performed in conformance with Quality Level "A" of CI/ASCE 38-02, *Standard Guideline for the Collection and Depiction of Existing Subsurface Utility Data.* Air vacuum excavation performed by experienced personnel shall be used to expose the utility. Miss Utility tickets and all required permits shall be obtained prior to performing Test Holes.

D. Test Holes shall be staked or marked prior to excavation. Test Holes shall be a minimum of 8” x 8” and typically not larger than 12” x 12”. Care shall be exercised in exposing the utility so as not to damage the utility and not to endanger personnel, the public and surrounding property. A field Test Hole form shall be completed for each excavation containing (at a minimum) parameters required by the Standard 38-02, which include: depth to the utility, outside diameter of the utility, duct systems such as electrical and telecommunication, top, bottom, width, height of conduits or encasements, utility material, pavement type and thickness, and general soil type.

E. The excavation shall be backfilled utilizing VDOT 21-A. A high epoxy content bituminous cold patch (VDOT Approved) equal in depth to three (3) inch thickness shall be used for pavement restoration and shall be guaranteed for a minimum of one (1) year. Survey accuracy GPS shall be used to locate the Test Hole.

F. A final Test Hole report shall be prepared and reviewed prior to submittal to the Department. The final Test Hole report shall be submitted (ready for printing on 8 ½” x 11” paper) to the Department’s Engineering Manager, Construction Manager and the Engineer of Record in one .pdf file that includes a Table of Contents, the completed Test Hole forms, copies of the Miss Utility Tickets, and all associated permits that were required.

G. Test hole locations shall be shown on the drawings and the completed test hole forms included in an appendix to the Project Manual or shown on the drawings.

3.3 DEPARTMENT OF PUBLIC UTILITIES REVIEW

3.3.1 ENGINEERING REPORTS

1. Engineering Reports shall be submitted to and approved by the Department before approval of plans and specifications. The Engineering Report shall include:

   A. Domestic, fire, irrigation, commercial, industrial, institutional, and other average and peak water requirements.

   B. Domestic, commercial, industrial, and institutional average and peak sanitary waste flows.

   C. For non-residential discharges a list of substances to be discharged into the sewer system.

   D. Existing facilities evaluation.

   E. A Corrosion Report prepared by a NACE Certified Engineer.

2. The Engineering Report shall contain an overall system layout plan, which includes all existing and proposed facilities together with a sufficient amount of the surrounding area that clearly outlines their interrelationship and a separate service area map. The Engineering Report shall demonstrate that the water and sewer systems are designed to serve the entire service area. Existing and proposed facilities shall be shown. The system layout plan shall show present and future development and proposed interim and future utilities, as well as those existing utilities that will be affected by or have an effect on the proposed utilities. The plan shall also include off-site service areas. **This necessitates consideration of property beyond the development or subdivision in question.** Existing and proposed ground elevations and features shall be shown at contour intervals not exceeding one (1) foot, unless otherwise approved in writing by the Department. Proposed utilities necessary to serve adjacent properties and associated easements shall be shown.

3. The Engineering Report shall contain a timeline that indicates the approximate build-out of the service area. Where phased development is contemplated, the extent of each phase shall be clearly delineated.

4. Minimum Requirements for Engineering Report (as applicable and as required by the Department):

   A. Cover.

   B. All pages numbered.

   C. Sections and appendices shall be tabbed.

   D. Table of Contents.

   E. Project Narrative – That describes the engineering features of the project.

   F. A tabular analysis of the total number of people to be served in the proposed service area. The analysis assumes full build-out of the proposed service area along with a timeline indicating approximate build-out of the Service Area.

   G. Where soil borings are required (e.g. pump stations, water tanks, trenchless crossings, deep excavations, etc.), a geotechnical report, foundation design and related recommendations shall be submitted as an appendix to the Engineering Report. Show the boring locations on the system layout plan.

   H. Environmental and Special Permits

      1. Identify wetlands within the project vicinity which may be impacted.

2. Identify any additional environmental or permit concerns.

I. Piping, appurtenances, and other requirements shall be included and as stated in the PFM. Exceptions to the PFM shall be noted and explained, as well as any unique project requirements.

J. Any additional design information discussed in this PFM which is pertinent to the project shall be included in the Engineering Report.

K. Water System Basis of Design Report

1. The Engineer shall contact the Department to obtain existing system flow/pressure information to be used by the Engineer in the on-site hydraulic model. Department Water Model information will be valid for a one (1) year period only. Water Models older than one (1) year will require a new model be requested from the Department. Sample water system information provided by the Department is located in Appendix D – Sample Water System and Sanitary Pump Station Model Data. Actual data will be provided by the Department.

2. Hydraulic design shall be accomplished by use of a suitable hydraulic model.

3. Hazen-Williams coefficient of friction ("C") factors:

   A. Existing cement-lined DI, concrete, and CI pipelines – 100

   B. New cement-lined ductile iron pipelines – 120

   C. New and existing PVC and HDPE pipelines – 130

4. The System shall be designed to provide an instantaneous demand flow of five (5) gallons per minute per residential connection at a minimum pressure of 25 psi and AWWA Manual 22 peak flows for all other commercial and multi-family dwellings.

5. Include domestic, fire, irrigation, commercial, industrial, institutional and other average and peak water requirements.

6. Model results for an Average Day, Maximum Day, Maximum Hour and Fire Flows for all areas and sub-areas of the proposed service area shall also be shown and presented in a tabulated form.

7. Include all hydraulic modeling information with design assumptions clearly indicated. Provide a hydraulic map identifying all nodes and pipe segments corresponding with the water model demands and calculations. Complete model runs (pipes and nodes) shall be provided for all design conditions.

Address total and future flows and system capacities of existing and proposed utilities and proposed water main sizes. When staged or interim construction is proposed, the design shall be developed and shall present a thorough investigation and justification based upon phased or alternate requirements.

8. Modeling results shall show a minimum of 20 psi and a maximum of 80 psi at design flow within the service area.

9. Fire flows shall be in accordance with the City of Suffolk Fire Marshall's office. Both required fire flow and available fire flow are to be clearly stated and discussed.

10. Hydrant spacing shall be in accordance with this PFM and as directed by the City of Suffolk Fire Marshall's office.

11. A table presenting line sizes, materials, joint type, projected pressure and projected flow and velocity (include C factor) shall be provided. Identify limits for design velocities in the pipe segments. Existing or proposed City water mains shall not exceed a velocity of 10 ft./sec. in any segment of the system, with the exception of fire hydrant laterals.

12. Provide water service line and meter sizing with supporting calculations.

13. Any additional design information (e.g. cathodic protection, soil corrosivity, test results, etc.) which is pertinent to the project shall be included in the Engineering Report.

L. Gravity Sewer Basis of Design Report

1. Average daily flow and peak flow from on-site and off-site areas presented in a tabulated form.

2. Sewer service area and project area maps shall include tax parcel numbers.

3. Average daily and peak flows shall be calculated. New development, on-site and off-site areas, domestic, commercial, industrial, and other flow figures shall be calculated in accordance with the Consent Decree Regional Technical Standards and all other regulating documents identified in this PFM.

4. Include initial and build-out conditions presented in a tabulated form.

5. Provide a tabular form summarizing sewer lines which includes: pipe size, pipe material, pipe slope, calculated flow, maximum capacity, upstream manhole number, downstream manhole number, upstream and downstream inverts for

cleanouts and manholes. The table shall identify connections of pipes to manholes and describes where manholes can be found on plans.

6. Identify where ductile iron pipe is required.

M. Sanitary Sewer Force Main Basis of Design Report

1. Force mains shall be designed for 2 to 8 fps based on existing and future design flows. The Department will model these flows as part of a Capacity Analysis Report. The Applicant shall provide the calculations and other information as required by the Department to perform this analysis.

N. Sanitary Sewer Pump Station Basis of Design Report

1. Wastewater pump stations and force mains are to be provided for the conveyance of sanitary, domestic, commercial, and industrial wastes.

2. For new and upgraded pump stations, the Department will provide hydraulic model results for the basis of design/impact analysis. The Applicant shall provide the flow calculations and other information as required by the Department to perform the impact analysis. See Appendix D - Sample Water System and Sanitary Pump Station Model Data. Actual data will be provided by the Department.

3. The Engineering Report shall contain a complete description of all design features anticipated to be required for conformance with this PFM.

4. The Department allows two “types” of sanitary pump stations: Type 1 - Wet Well/Dry Well; and Type 2 - Submersible. All projects requiring a pump station will require a preliminary conference with the Department to confirm the type of pump station that will be acceptable. The Department will identify the type of pump station that will be required.

5. The Department’s electrical service preference for all pump stations is grounded wye secondary service (480 volt, 3 phase) power. The Department may approve 208 volt, 3 phase. The Department’s Control System Standard (see Appendix) is based on this service. Any other service anticipated to be provided shall be discussed with the Department.

6. Pump motors shall be non-overloading over their entire operating range. Pump motors for variable frequency drive (VFD) stations shall be inverter-duty rated with the necessary insulation class and all other features required to be fully compatible with VFD drives.

7. Pump stations that are expected to be modified at a later date as a service area develops shall include the appropriate electrical, structural and equipment provisions to accommodate the ultimate modifications anticipated.

8. Privately owned and operated sewer systems and pump stations shall be designed to the standards and requirements of this PFM.

9. Pump station types are generally described as follows:

   A. Type 1: Wet Well/Dry Well Stations:

      Type 1 pump stations are required for ultimate peak flows equal to or greater than 500 gpm and/or a motor size equal to or greater than 30 horsepower (HP). Type 1 pump stations shall be a wet well/dry well, cast-in-place structure with two or more dry-pit submersible, solids handling, centrifugal pumps. This station may handle domestic, industrial and/or commercial flow. Terminal stations may require VFDs. VFDs may also be required at non-terminal stations depending on other design factors. If it is determined and agreed upon by the Department that VFDs will not be required, then soft-starters shall be used. An emergency generator with automatic transfer switch (ATS) is required. See Appendix for the Department's Prototype pump station standard, Generator Specification and ATS Specification. Pump, motor and impeller shall be in accordance with the Department's current Approved Products and Materials List. Motors cooled by external media systems shall not be allowed. Motors shall be explosion proof and shall bear an Underwriter Laboratories (UL) or Factory Mutual (FM) label. Stations with solids handling pumps shall be provided with one (1) complete spare pumping unit including power and control cables and all associated hardware required for installation. Type 1 stations will be owned by the City after Department acceptance of the project.

   B. Type 2: Submersible Stations:

      Type 2 pump stations are normally accceptable for peak flows less than 500 gpm and/or motor sizes less than 30 HP. Type 2 pump station is a submersible type, precast structure with two or more submersible, solids handling, centrifugal pumps. This station may handle domestic, industrial and/or commercial flow. Terminal stations may require VFDs. VFDs may also be required at non-terminal stations depending on other design factors. If it is determined by the Department that VFDs will not be required, and if pumps are below 15 HP, then furnish across-the-line starters. If pumps are 15 HP or above, then soft-starters shall be used. An emergency generator with automatic transfer switch (ATS) is required. See Appendix for the Department's Prototype pump station

standard, Generator Specification and ATS Specification. Pump, motor and impeller shall be in accordance with the Department's current Approved Products and Materials List. Motors shall be explosion proof and shall bear an Underwriter Laboratories (UL) or Factory Mutual (FM) label. Stations with solids handling pumps shall be provided with one (1) complete spare pumping unit including power and control cables and all associated hardware required for installation. Stations with grinder pumps shall be provided with two (2) complete spare pumping units including power and control cables and all associated hardware required for installation. Type 2 stations will be owned by the City after Department acceptance of the project.

C. Private Pump Stations:

1. Private residential pump stations shall only be allowed for single-family domestic-type flows. Single family grinder pump stations shall be owned and maintained by the property owner.

2. Small industrial/small commercial pump stations shall only be allowed for small commercial/industrial type flows. The property owner shall maintain a maintenace/service contract with a registered pump station maintenenace contractor.

3.4 SEPARATION OF WATER LINES AND SANITARY AND STORM SEWER LINE FACILITIES

1. The VDH Waterworks Regulations, latest Edition shall be met with respect to minimum separation distances between sanitary sewer structures and water lines, water supply wells or other water supply sources and structures.

2. Sanitary sewers crossing under storm sewers shall maintain a minimum vertical separation of 12 inches. Where this separation is not possible, ductile iron pipe shall be used. Where gravity sewers are located under large storm drains (>18 inches) with less than 12 inches vertical clearance, the gravity sewer shall be ductile iron pipe from manhole to manhole or the entire lateral length and special bedding material is required. Where large storm drains are placed over existing PVC gravity sewer lines with less than 12 inches clearance, a storm drain bridge shall be installed to prevent future settlement.

3. A minimum of 12 inches of vertical separation shall be provided between proposed water mains and storm drain lines when water mains are located under storm drains. If 12 inches minimum separation cannot be achieved, the water main shall be ductile iron pipe for one full joint centered on the crossing and a neoprene pad shall be placed between the pipes.

3.5 UTILITY LINES CROSSING RAILROADS AND MAJOR ROADWAYS

1. All water and sewer line crossings of railroads, major roadways, and other major structures shall be encased in a casing pipe.

2. Design of railroad crossings shall comply with the requirements of American Railway Engineering and Maintenance-of-Easement Association (AREMA) Specifications, Part 5 – Pipelines (latest revisions).

3. Design of major roadway crossings shall comply with the requirements of the City of Suffolk PFM Volumes I and II.

3.6 PROTECTION OF WATER SUPPLIES

There shall be no physical connection between a potable water supply and a sanitary sewer, storm sewer or appurtenances.

3.7 BACKFILL AND COMPACTION

1. The Engineer shall include compaction requirements (recommended in the Geotechnical Report) on the plans:

   A. Minimum compaction shall be specified.

   B. Compaction requirements for roads and paved areas shall be specified.

   C. Compaction requirements adjacent to structures shall be specified.

2. Additional backfill and compaction requirements are as specified in this PFM and as shown on the Standard Details included in this PFM.

3.8 BACKFLOW PREVENTION

1. All pipelines, meters, irrigation, fire systems, and plumbing work shall be in accordance with the Department, this PFM and the VDH Regulations.

3.9 DESIGN STANDARDS FOR WATER DISTRIBUTION FACILITIES

3.9.1 GENERAL REQUIREMENTS:

1. Water distribution facilities are to be provided solely for the purpose of supplying potable water and fire protection. The following design parameters shall be used in the design of water distribution facilities. Water transmission facility design parameters may change and are superseded by project specifications on a case by case basis.

2. All installations shall be in strict accordance with the VDH Waterworks Regulations, latest edition, and this PFM.

3.9.2 TECHNICAL DESIGN, WATER DISTRIBUTION FACILITIES

1. System Layout:

   A. The overall layout and general design shall conform to the parameters set forth in the approved Engineering Report.

   B. All water mains shall be located, where practical, in:

      1. Legally established road rights-of-way.

      2. Legally established permanent public utility easements

      3. Outside of jurisdictional wetland areas whenever possible.

   C. In general, main line valves are required at tees and crosses to allow adequate control of the system without major system shutdowns.

   D. Construction shall generally be parallel to the center line of roads or easements. The same offset shall be used throughout except when existing utilities dictate a change in offset along the proposed line.

   E. Water mains shall be installed a minimum of ten (10) feet from any part of any structure, building, or its foundation and a minimum of five (5) feet from curbs, curb gutter pans, sidewalks, and similar structures or three (3) feet from edge of pavement where there are ditches. No water pipe shall terminate under a concrete gutter.

   F. Water service lines shall be provided to each lot. Services shall be located ten (10) feet on either side of the lot centerline unless shown otherwise on the plans.

   G. All parcels with a water service will require a water meter. No water meters will be installed until the Water Service Application and the Service Contract have been completed.

      1. Water meter boxes shall be located as close as possible to the right-of-way/easement line.

      2. Where possible, water meter boxes shall be placed in grass areas rather than in pavement or concrete sidewalks/driveways.

H. Aerial installations will not be allowed without prior written approval by the Department. If permitted, installations shall be as stated in this PFM. The Applicant shall submit design calculations for the aerial installation in the Engineering Report.

I. Underwater installation will not be allowed without prior written approval by the Department. In the request for the underwater installation, the Applicant shall show that other types of installation have been considered. The Applicant shall submit design calculations for the underwater installation in the Engineering Report.

2. System Design

A. The proposed facilities, together with the pertinent existing facilities, shall be evaluated based on the hydraulic design, demand design, and fire protection design requirements contained herein.

B. The Applicant shall submit to the Department a neat and orderly set of design calculations to illustrate maximum demands, pipe size selection, restrained joint lengths, and fire protection requirements. Both required fire flow and available fire flow shall be clearly stated and discussed. Code references shall be provided and fire hydrant spacing shall be in accordance with the City of Suffolk Fire Department Fire Marshall.

C. The minimum ground cover to the top of pipes shall be thirty-six (36) inches. Where water mains have twelve (12) feet of cover or greater (as measured from ground surface to top of pipe) or less than three (3) feet of cover, pipe shall be ductile iron. All pipe equal to or greater than eight (8) inches diameter shall be ductile iron pipe.

D. City fire service lines shall be ductile iron pipe.

E. Minimum pipe size is six (6) inches in residential areas and eight (8) inches in multi-family, commercial and industrial areas. The Department retains the right to determine the size of any water main that will be accepted into the City's distribution system. Distribution water lines not sized to carry fire flows shall not be connected to fire hydrants.

F. Unless otherwise approved by the Department, the domestic and fire service lines shall be separate connections to the City's water system.

G. **Dead end lines shall be minimized by looping mains where practical and where required by the Department.** Where unavoidable dead ends occur, they shall be provided with a fire hydrant or an adequate sized blow-off assembly at the end of the water main. The blow-off assembly pipe work and valves shall be appropriately sized and shall conform to this PFM.

H. The design documentation shall address total current and projected future flows and system capacities of existing and proposed utilities and shall provide the proposed water main sizes.

I. The design shall be based on ultimate development (complete build-out of the area) and shall present such factors as deemed necessary for a sound evaluation of the several factors used in development of the Engineering Report.

J. Where an alternate design is proposed that would incorporate interim or staged construction, the report shall develop the alternate design and shall present a thorough investigation and justification for consideration of the alternate.

3. Fire Protection Design

A. Fire protection systems for buildings shall be designed in accordance with International Fire Code, latest City adopted edition and the City of Suffolk Fire Marshall.

B. Rates of flow for fire protection shall be determined based on the current regulations adopted by the City of Suffolk.

C. The minimum fire flow from any individual fire hydrant shall be 1000 gpm for one and two family dwellings <3600 sq. ft.; 1500 gpm for one and two family dwellings >3600 sq. ft.; 1500 gpm or greater for commercial buildings; or as otherwise required by the City of Suffolk Fire Marshall. The minimum system pressure at maximum hour plus fire flow shall be 20 psi.

D. The minimum size water main used for fire protection shall be eight (8) inch inside diameter. Minimum six (6) inch DI pipe shall be used to connect the hydrant to the main.

E. The Engineer shall recommend location and placement of new fire hydrants subject to review and approval by the City of Suffolk Fire Marshall and the Department.

F. Public fire hydrants shall be located at intersections wherever possible. The location shall be selected to be (1) on the same side of the street as the main, (2) as safe from traffic as possible, and (3) a minimum disruption to parking. Mid-block hydrants shall be at property lines wherever possible. Each hydrant shall be preceded with a gate valve with valve box. Hydrants shall be set with the bury line flush with the finish grade. Hydrants shall typically be seven (7) feet to nine (9) feet from edge of pavement. On curbed and guttered streets, hydrants shall be eighteen (18) inches from the back of the curb. The maximum distance between hydrants shall be 800 feet vehicular travel distance or 400 feet from dead ends.

G. Public Fire hydrants shall be located, where practical, in legally established road rights-of-way. Easements may be used only if road rights-of-way are impractical to use, or as approved by the Department.

H. The above criteria for spacing fire hydrants may be modified by the Department or the Suffolk Fire Department Fire Marshall to improve fire hydrant accessibility for firefighting purposes.

I. Structures on private property protected by an automatic sprinkler system and/or private fire hydrants and directly connected to the City's water system require installation of a detector check valve and vault assembly and a backflow preventer in accordance with the Department and this PFM. The fire service line shall be installed independent of the domestic water service for the premises.

J. Identify if a sprinkler system is being proposed for the buildings. Total fire demand is determined as the combination of external fire hydrant demand and internal sprinkler demand and cannot exceed the available fire flow in the City system.

4. Structural Design of Pipe Systems

A. Structural requirements shall be addressed in the design of all water mains and appurtenances.

B. Proper restraint shall be provided and shown on the profile view. Normal pipe restraint shall be through the use of restrained joints. Restrained joints may be the pipe manufacturer’s proprietary system or mechanical joint pipe with Mega-Lugs in accordance with DIPRA and PVCRA specifications for such pipe. All bends, tees, valves, and dead ends (including fire hydrants and hydrant valves) shall be securely restrained. Restrained pipe lengths shall be shown on the profile view of the drawings. Design assumptions shall be provided for the restrained joint calculations and shown on the plans including, but not limited to, the following:

1. Pipe material;

2. Soil type;

3. Safety factor;

4. Trench type;

5. Depth of bury;

6. Test pressure;

7. Fittings and type; and

8. Polyethylene Encasement.

C. Proper support shall be provided for aerial or suspended lines, where allowed by the Department.

D. Water line crossings above surface water shall be:

1. Adequately supported.

2. Completely insulated to protect from freeze damage.

3. Accessible for repair or replacement.

4. Above the 100-year flood plain elevation and any floating debris the flood water may carry.

E. Water lines crossing water bodies shall be as approved by the Department.

5. Miscellaneous Considerations

A. The minimum size water line pipe to be used for normal domestic water supply in cul-de-sacs (not including fire protection) shall be four (4) inches where approved by the Department, and be capable of supplying five (5) gpm per residential connection.

B. Valves shall be installed at every pipe intersection. For minimum number of valves, use N-1 Rule with N being the number of pipes entering a junction. Valves shall be located no more than three (3) feet from fittings. For pipe twelve (12) inches or smaller, gate valves shall be installed. For pipe larger than twelve (12) inches, butterfly valves shall be installed.

C. For water mains, isolation valves shall be located at a minimum of 1600 feet, preferably co-located with a hydrant branch.

D. Air and air/vacuum release valves and related fittings shall be provided at high points. The type, size, etc., shall be specified by the Engineer, subject to approval by the Department. The design shall slope piping to minimize the need for air and air/vacuum release valves.

E. Blow-offs or hydrants shall be placed at high points of the water main and at pipe dead ends. The blow-off assemblies shall conform to this PFM.

F. The profile of water services at ditch lines shall be shown on plans and have a minimum of 24 inches cover at the ditch invert, unless otherwise approved by the Department.

G. Service lines and meters shall be sized in accordance with AWWA Manual M-22, Sizing, Water Service Lines and Meters. Meter sizing calculations shall be provided with the Submittal package.

H. Where water lines are subject to extreme variations in temperature (i.e., attached to bridges or box culverts) consideration shall be given to expansion and contraction of pipe materials and the freezing of the line contents.

I. Irrigation systems using City water shall use the appropriate backflow devices as indicated in this PFM.

J. Where exposed to traffic, meter boxes and vaults shall be designed for the appropriate traffic loading (minimum AASHTO H-20 or greater loading as required).

K. Concrete shall not be placed over water mains unless otherwise approved by the Department.

L. Duct banks or other utilities shall not be placed over water mains unless otherwise approved by the Department.

M. Backflow prevention shall be addressed for all water systems. If backflow prevention is required it shall comply with the Cross Connection Control section of this PFM.

3.10 DESIGN STANDARDS FOR SANITARY COLLECTION FACILITIES

3.10.1 GENERAL REQUIREMENTS

1. Sanitary sewers are to be provided solely for the collection and transport of sewage.

2. Although constructed as parcels or sub-systems, all sewer pipe and related facilities of all proposed developments shall be designed and approved on the basis of their functional integration with the City's total public sanitary sewer system.

3. In accordance with the SCAT Regulations, all sewers shall be designed by Professional Engineers licensed in the Commonwealth of Virginia.

4. In accordance with the Consent Decree:

   A. Flow Acceptance applications submitted to HRSD, are to be jointly developed by the Applicant and the Department.

   B. Upon approval by HRSD, the HRSD and City Flow Acceptance package will be

forwarded to DEQ for approval and issuance of a Certificate to Construct.

C. For purposes of construction, the Contractor shall utilize the plans approved by the Department.

5. All sanitary sewer designs shall comply with the Consent Decree Regional Technical Standards, SCAT Regulations and as stated in this PFM.

6. The Owner/Applicant shall obtain all necessary permits for construction and operation of all proposed sanitary facilities.

7. Provide calculations indicating pipes are sized so that maximum depth of flow in any pipe at ultimate flow does not exceed two-thirds (2/3) full.

8. Minimum fall across manholes is 0.10 feet.

9. The Engineer's design shall minimize (to the maximum extent practicable) installation of manholes in depressed drainage areas. If manholes must be installed in depressed drainage areas, the Department Standard Manhole Insert shall be installed. Such locations shall be identified in the Engineering Report and called out on the plan sheets.

10. The Engineer's design shall minimize (to the maximum extent practicable) installation of cleanouts in depressed drainage areas. Such locations shall be identified in the Engineering Report and called out on the plan sheets.

11. No conflict manhole structures will be allowed.

12. Under no circumstances shall any roof, foundation, surface or sub-surface drainage, or any other form of storm drainage be allowed to pass through the proposed facilities. The design shall also conform to the minimum standards set forth in the SCAT Regulations, RTS and this PFM.

3.10.2 SEWER COLLECTION FACILITIES (GRAVITY)

1. The following sections generally pertain to public sewer systems. However, private systems shall also follow the guidance presented in this PFM as appropriate and as determined by the Department.

2. System Layout

   A. The overall layout and general design shall conform to the parameters set forth in the approved Engineering Report and this PFM as appropriate.

B. All public sanitary sewers shall be accessible for operation and maintenance as follows:

1. Locate all sanitary sewers in legally established road rights-of-way.

2. Where it is not practical to avoid placing public sewers on private property the sewer shall be installed in legally established permanent public utility easements in accordance with this PFM.

3. Sewers shall be located outside of jurisdictional wetland and flood plain areas whenever possible.

4. Stormwater BMPs shall not encroach on the sanitary sewer.

5. Location shall normally be along the center line of pavement, center line of travel lane or the third point of easements. Consideration shall be given to future extensions of other City underground utilities when determining final location.

6. All sewers shall be on continuous grade between manholes.

7. Sewers shall intersect in manholes at angles not greater than 90 degrees.

8. Where sewer depth is ten (10) feet or less, sewer mains and manholes shall be located a minimum of ten (10) feet horizontally from any part of a building, structure, or its foundation. Where the depth of sewer is greater than ten (10) feet, the sewer mains and manholes shall be located a minimum of fifteen (15) feet from any part of a building, structure, or its foundation.

3. System Design

A. The overall design shall be in accordance with the provisions of the approved Engineering Report and in accordance with this PFM, the RTS and the SCAT Regulations.

B. In case of conflicts between the RTS, this PFM and the SCAT Regulations, the order of precedence shall be the RTS over this PFM over the SCAT Regulations.

4. Capacity Design

A. Calculations of sewer capacity and line sizing shall be shown in tabular form, including anticipated future improvements that may be required.

B. Calculations shall be accompanied by a layout plan showing the system layout in accordance with this PFM. Layout plan shall show entire service area involved, locations of the lines in the system, and points of entry of flows, including any flows

being received from other areas. Layout plan shall be keyed to calculation sheets. Calculations and layout plan shall be submitted to the Department for approval.

C. Sewer system service area map shall be provided showing proposed and future service areas. Service area map shall be submitted to the Department for approval.

5. Hydraulic Design – Gravity Sewers

A. The minimum size pipe to be used in gravity sewer systems shall be eight (8) inches.

B. Minimum design grades shall be as shown in Table 3.10.2 below. Slopes greater than those listed are desirable.

Minimum actual grades shall not be less than those required to produce a minimum velocity of at least two (2.0) feet per second with uniform slope when the sewer size selected is flowing full or half full. Pipe sizes shall not be arbitrarily increased in order to take advantage of a flatter slope.

TABLE 3.10.2
SEWER DESIGN GRADES

Sewer Size (Inches)	**Minimum Design Slope in Feet/100 Feet**	
	Ductile Iron	**PVC**
8	0.450	0.290
10	0.330	0.230
12	0.270	0.190
16	0.190	0.130
18	0.170	0.120
24	0.130	0.090
30	0.108	0.080

C. Computations shall be shown for velocity of flows based upon the following values of "n" as used in the Manning formula for velocity of flow:

1. For ductile iron pipe: n=0.013.

2. For PVC pipe: n=0.011.

D. Pipe scouring velocities shall be maintained between two (2) to eight (8) ft./sec. during average daily and peak flows. Calculations shall be presented verifying these velocities can be achieved with selected pipe sizes.

E. Match crown elevations where pipe diameters increase at manholes.

F. Pipe diameters that decrease in direction of flow shall not be allowed.

6. Structural Design and Location

A. Structural requirements shall be addressed in the design of all sewers and appurtenances.

B. Pipe design and classification shall normally be as specified in this PFM. Where conditions otherwise dictate, a project specific design shall be provided per the guidance below.

1. Proper strengths shall be determined and indicated for the sewer pipe materials being specified. Strength shall be based upon pipe size, proposed depth, width of trench, bedding conditions, existing ground conditions, etc.

2. Pipe strength or class shall be shown on the plans if pipe strengths are changed rather than varying bedding conditions.

3. No change in pipe strength or material shall be made between manholes.

C. Gravity manholes receiving pumped flows shall be protected against sulfide attack by the application of an approved protective lining material. See the Department's current Approved Products and Materials List.

D. Ductile iron pipe shall be used as follows:

1. Where sewers cross streams, estuaries, lakes or reservoirs and jurisdictional wetland areas.

2. As a carrier pipe within any bore or tunnel crossing.

3. Where pipes have greater than twelve (12) feet of cover (as measured from ground surface to top of pipe) or less than three (3) feet of cover.

4. Where otherwise directed by the Department for traffic bearing capacity or other purposes.

E. Steel casing pipe shall be sized in accordance with this PFM.

F. Manholes shall be placed outside of gutter lines, ditches or swales, flood prone areas or areas subject to water ponding and away from storm drain inlet structures unless otherwise approved by the Department.

G. Ductile iron pipe shall be used in subdivisions for sanitary sewer lines installed in an easement along the property line between developable areas.

H. Ductile iron pipe shall be used in easements where, in the opinion of the Department, the sanitary sewer is not accessible from a street, parking lot, or driveway.

I. Where future expansions of the system are planned, the sewer shall be extended to within five (5) feet of adjoining property for connection to future pipes, and shall be shown on the plan. Such extensions shall terminate with a manhole structure.

J. Where stream crossings are required, the pipe shall be ductile iron. Joints shall be mechanical joint or other restrained joint as approved by the Department. Stream crossings shall be tested in place and show zero leakage.

K. Horizontal auger boring and jacking of casing pipe under pavement shall be installed where directed by the Department.

L. Pipe materials shall be in accordance with this PFM.

7. Sewer Appurtenances

A. Standard and drop manholes, service connections and other appurtenances shall be constructed in accordance with this PFM. Drop manholes shall be avoided where practical.

B. Manholes shall be installed at the end of each line, at all grade, size, or alignment changes, and at all sewer line intersections.

C. Non-residential sewer connections greater than six (6) inch shall be made by construction of a manhole on the City sewer and at the property or easement line. Such construction shall be in accordance with this PFM.

D. Manholes shall be spaced at distances no greater than 400 feet. All sewer mains shall terminate with a manhole.

E. Minimum diameters for manholes shall be as follows: less than twelve (12) feet deep – forty-eight (48) inch dia., twelve (12) feet deep or greater (as measured from manhole rim to invert of lowest pipe) – sixty (60) inch dia. The required manhole diameter based on pipe diameters and entry angle requirements shall override the minimum diameters. All interior drop connection manholes shall be sixty (60) inch diameter.

F. Sewer lines shall be protected from a 100-year flood by either raising manhole tops above the flood elevation or by the use of watertight frames and covers and/or

inserts as directed by the Department. In flood plains where watertight frames and covers and/or inserts are used, unventilated length of sewer cannot exceed 1000 feet. Manhole covers shall be no more than thirty (30) inches above ground level.

G. In undeveloped areas, manhole castings shall be set approximately twelve (12) inches above final grade.

H. Sewer laterals for non-residential connections shall be a minimum size of six (6) inches. Sewer laterals for residential connections shall be a minimum size of four (4) inches.

I. A cleanout shall be provided at the property/easement line for each lateral connection six (6) inches or less.

J. All lateral connections which are for future use shall be capped.

K. No sewer shall be cut for lateral connections except as approved by the Department. Wyes for lateral connections shall be installed where indicated on the approved plans. Each lateral shall terminate at the property line or easement with a standard cleanout or manhole in accordance with this PFM.

L. At the upstream manhole in a cul-de-sac, the maximum number of sewer connections allowed into the manhole is three (3). They shall be spaced one foot on centers around the manhole, and staggered vertically.

M. Manholes shall not have bricked-up or partially scored openings for future sewers. Manhole connections shall be in accordance with this PFM at the time the sewer is to be extended.

8. Depth of Sewers

A. All sewers shall be of sufficient depth to provide service to the lowest sewered elevation of the structure in question, allowing proper service connection grade. Minimum depth of cover over cleanouts at right-of-way/easement line shall be thirty-six (36) inches.

The Engineer shall verify that all proposed sites will be served by gravity with sewer service connections installed at a minimum one percent (1%) slope. Unless the building is provided with a grinder pump, the depth of service connections shall be low enough to accept flow from the lowest sewered floor. Grinder pumps for individual or groups of buildings shall have approval of the Department and will be the property and responsibility of the building Owner/Applicant. Exceptions to the above requirements will be considered only if it is impractical to provide required depths, in which case, special approval shall be secured from the Department.

B. All sewers crossing water bodies shall be as approved by the Department.

3.11 SANITARY SEWER PUMP STATIONS

3.11.1 GENERAL REQUIREMENTS

1. The Owner/Applicant shall furnish and perform all work necessary for the construction of the Pump Station, complete and ready for use. All materials used shall be new, of the best quality and entirely suitable in every respect for the service required.

2. The Department's Instrumentation and Control Standard (located in the Appendix to this PFM) is designed to provide a consistent approach to pump station operation. The three designs are to be used as appropriate for all pump stations to be owned and operated by the Department. Selection of which of the three designs are used shall be made by the Department and will be based on specific location and system operational factors. Generally, the selection will be as follows:

   A. Type 1: Variable Frequency Drive pump stations shall utilize the Department's VFD I/C Specifications/Drawings and the Type 1 guidance Drawings located in the Appendix to this PFM. Type 1 pump stations are wet-pit/dry-pit cast-in-place with duplex, dry-run submersible pumps for Peak flows greater than 500 gpm or motor sizes greater than or equal to thirty (30) horsepower.

   B. Type 2: Constant Speed Soft Start pump stations shall utilize the Department's CS-SS I/C Specifications/Drawings and the Type 2 guidance Drawings located in the Appendix to this PFM. Type 2 pump stations are precast structures with duplex submersible pumps for Peak flows less than 500 gpm or motor sizes less than thirty (30) horsepower.

3. Only manufactured products which are listed on the Department's current Approved Products and Materials List shall be incorporated in the design.

4. Only Class A Registered Virginia General Contractors with suitable experience shall be considered for the construction/installation of the pump station.

5. Pump stations shall meet the design capacity with one pump out of service.

6. Provide minimum pump submergence required to eliminate vortexing at pump suction intake.

7. The Engineer shall determine the availability of electric service and coordinate the available electrical service with that required for the facility.

8. Wet wells shall be designed for a storage volume of twenty (20) minutes at Average Daily Flow rate.

9. Wet well operating levels shall be as shown on the Department prototype pump station drawings in this PFM.

10. All miscellaneous metal items in the wet well shall be Type 316L stainless steel. All fasteners shall be Type 316L stainless steel.

11. All handrails, ladders, grating and other miscellaneous metal items in the dry well and valve vault shall be aluminum or Type 316L stainless steel. All fasteners shall be Type 316L stainless steel.

12. The interior and exterior of concrete wet wells and exterior of the valve vault shall be coated with the coating manufacturer's recommended thickness of Product as specified in the Department's current Approved Products and Materials List.

13. Solids handling pumps shall generally operate at speeds of 1,800 RPM or below.

14. NPSHA shall exceed the NPSHR by a minimum of one (1) foot for the pump selected. Calculations shall be provided.

3.11.2 PUMP STATIONS

1. All materials shall be in accordance with the Department's current Approved Products and Materials List.

2. The pump station lot shall be adjacent to a City maintained right-of way or a paved roadway and an Ingress/Egress easement shall be provided.

3. The minimum lot size for pump stations shall be as shown on the Department's prototype pump station site layout plan. Prior to any final acceptance of the pump station, the Applicant shall provide the Department with a copy of the recorded transfer of land, to ensure the property is deeded to the City.

4. Locate discharges for dry well sump pump and pump volute air release away from pump intakes in the wet well and design to minimize turbulence and air entrainment.

5. Adequate head clearance (7'-0" minimum) shall be provided at all stair landings.

6. Wall-mounted door stops shall be provided for doors to prevent door over-travel.

7. Interior Piping:

   A. Provide ductile iron flanged joint.

   B. Provide a gate valve on the suction and discharge sides of each pump.

C. Provide ductile iron resilient seat gate valves that meet the requirements of AWWA C515. Valves shall be NRS, open left (counter clockwise) and be coated with fusion bonded epoxy.

D. Provide iron body, rubber seat check valves with packing glands and external lever and weight in accordance with AWWA C508 on the discharge side of each pump between the gate valve and the pump.

E. Provide adequate pipe support and thrust restraint with base elbows, base pads or hangers as required. Pipe supports on the floor shall be mounted on housekeeping pads.

F. A minimum of three (3) feet shall be provided between pump pads and between pump pads and walls.

G. Eccentric reducers shall be used (match elevations at top of pipe) on the suction piping in order to prevent the entrapment of air.

H. Provide a manual air release on the discharge of each pump. Reduce from tap on pump volute to one-half (½) inch pipe and one-half (½) inch quarter turn ball valve. Piping from pump volute through ball valve shall be brass. Provide a union after the ball valve to facilitate its removal. Piping from ball valve to wet well may be copper or schedule 80 PVC. Locate the ball valve and union close to the pump volute. Provide a gauge with petcock on the discharge of each pump. All metal pipe, valves and fittings shall be threaded.

I. Wall penetrations below grade shall be as shown on the Type-1 and Type-2 Prototype drawings included in Appendix G of this PFM.

8. The facility shall be connected to a public water supply. Where a public water supply is not available, a water supply well may be required by the Department.

9. Dry pits shall be provided with at least one (1) sump and sump pump to remove dehumidifier waste and wash water. Provide positive drainage to the sump. Sump pump shall be provided with automatic controls. Controls may be external or incorporated into the pump. The sump pump shall discharge into the wet well.

10. Provide heating with wall mounted thermostat to prevent freezing of pump station facilities.

11. Provide for ventilation of the pump station in accordance with the SCAT regulations.

12. Maximum permissible driveway slope shall be eight percent (8%), unless approved by the Department.

3.11.3 PUMP STATION ELECTRICAL

1. The Department's Instrumentation and Control Standard is designed to use grounded wye secondary service (480 volt, 3-phase) power. The Department may approve 208 volt 3-phase power. If such service cannot be provided, contact the Department to discuss the options.

2. The pump station shall have a permanently installed emergency generator and automatic transfer switch. The fuel storage tank shall be sized to operate all pumps for forty-eight (48) hours continuous operation.

   A. The generator and automatic transfer switch (ATS) shall be provided in accordance with the Department's Generator and ATS Specifications.

   B. A natural gas generator may be provided if service is available, if approved by the Department.

3. The Engineer shall design protection of the pump station from lightning and shall provide the proper equipment to prevent damage of all motors, motor controls, electrical panels and other electrical equipment. Lightning protection system shall be in accordance with NFPA 780 and UL-96, UL-352, UL-397, UL-397C and UL-39 ED.3.

4. The Engineer shall design protection of the pump station from voltage surges and drop outs and shall provide the proper equipment to prevent damage of all motors, motor controls, electrical panels and other electrical equipment.

5. The pump station shall have a separate grounding system. Grounding the building to piping shall not be allowed.

6. Dry well ventillation shall be equipped with a "hand-off-auto" switch with the "auto" interlocked with the dry well lights.

7. Control room ventilation shall be equipped with a "hand-off-auto" switch with the "auto" interlocked with the Pump Station Entrance Panel.

3.11.4 CAPACITY DESIGN

1. Pump station capacity is determined by the Engineer of Record's (EOR's) Engineering Report and hydraulic evaluation of the station performed by the Department. The Engineering Report shall establish the proposed flows to the pump station and the Department's hydraulic modeling/evaluations will determine the existing flows. The Department will provide a table of Design Parameters to the EOR that will provide the Average Daily and 2-year Flows in flow rate (gpm) and the header node elevation at an established point either at the pump station, HRSD's interceptor force main or the

City's force main. This location is typically a function of whether the station is existing or new. A sample of the Design Parameters Table is included in Appendix D.

2. Based on the information provided by the Design Parameters, the EOR is responsible for selecting the size of the force main, wet well, and pump selection. Design shall take into consideration such parameters as minimum, average, and peak station inflows, maximum pumping rates and downstream pressures. Pump selection and force main sizing shall be based on a hydraulic analysis of the required flows, pipeline velocities, and receiving gravity sewer or force main capacities. Flow and friction calculations shall be performed and provided using a Coefficient of Friction of C=120 for new cement lined ductile iron pipe, C=100 for old ductile iron, concrete, or cast iron pipe and a C=130 for new and existing PVC and HDPE pipe. Pipeline velocities shall be calculated from the pump suction to the force main at the BEP and typical operating range.

3. Pump Selection and Design procedures:

   A. Upgrade of Existing Pump Stations for Proposed New Development:

      1. The EOR shall provide design flows and service area map for the proposed new development in accordance with the requirements of this PFM.

      2. The Department shall evaluate the capacity of the existing station to accommodate the additional flows.

      3. If the existing station is unable to handle the additional flows, the EOR will be required to select new pumps and design pump station modifications to accommodate the additional flows under the hydraulic flow conditions (system head criteria) as provided by the Department.

      4. The EOR shall select an initial pump design, impeller size, and pump configuration based on the design parameter conditions provided by the Department. The pump selected shall operate in the Prefered Operation Range (POR), from 70 to 120 percent of the Best Efficiency Point (BEP), and within the pump manufacturer's Acceptable Operating Range (AOR). The selected pump impeller should fall within the middle or lower range of impeller sizes.

      5. The EOR shall provide a completed pump station schematic as shown in Appendix D and a pump curve and table defining flow and TDH. For variable speed pumps, provide a maximum and minimum curve in the same format. The Department operates VFD's between 75 and 100 percent of full speed.

6. The initial pump selection will be validated by the Department through modeling using relevant design information provided by the EOR and the Department's hydraulic model.

7. The Department will provide model results related to the following:

   A. Wet well level;

   B. Pump run times;

   C. Flows;

   D. Pressures; and,

   E. Scatter graph of pump operating points along pump curve.

8. The EOR will evaluate the pump performance of the selected pump in regards to:

   A. Cycle times;

   B. Run times;

   C. Surcharging;

   D. Overall operating conditions; and,

   E. POR and AOR.

   F. Pipe flow velocity from the pump suction to the pump station discharge.

9. Modifications to the selected pump and impeller may be required to meet Department operating standards.

B. New Pump Stations:

1. The Engineer of Record shall provide design flows and a service area map for the proposed new development in accordance with the requirements of this PFM.

2. The Department will provide initial boundary flow conditions for the pump station utilitzing the Department hydraulic model.

3. The EOR shall select an initial pump design, impeller size, and pump configuration based on the design parameter conditions provided by the

Department. The pump selected shall operate in the POR, from 70 to 120 percent of the BEP, and within the pump manufacturer's AOR. The selected pump impeller should fall within the middle or lower range of impeller sizes.

4. The EOR shall provide a completed pump station schematic as shown in Appendix D and a pump curve and table defining flow and TDH. For variable speed pumps, provide a maximum and minimum curve in the same format. The Department operates VFD's between 75 and 100 percent of full speed.

5. The initial pump selection will be validated by the Department through modeling using relevant design information provided by the EOR and the Department's hydraulic model.

6. The City will provide model results to the EOR related to the following:

   A. Wet well level;

   B. Pump run times;

   C. Flows;

   D. Pressures; and,

   E. Scatter graph of pump operating points along pump curve.

7. The EOR will evaluate the pump performance of the selected pump in regards to:

   A. Cycle times;

   B. Run times;

   C. Surcharging;

   D. Overall operating conditions; and,

   E. POR and AOR.

   F. Pipe flow velocity from the pump suction to the pump station discharge.

8. Modifications to the selected pump and impeller may be required to meet Department operating standards.

4. Force main design calculations shall, at a minimum, include:

   A. Friction losses, including minor and valve losses.

   B. Static Head Calculations.

   C. Station suction piping friction losses, including minor, entrance and valve losses.

   D. Station discharge piping friction losses, including minor, entrance and valve.

   E. The initial and ultimate receiving head and flow conditions, if the force main discharges into a force main. Sanitary Sewer Hydraulic Model information will be supplied to the Applicant by the Department.

   F. Total Dynamic Head (TDH) calculation at the Initial and Ultimate Flow Conditions.

   G. Force main sizing calculations which include velocity figures for maximum and minimum pumping.

5. Calculations shall be prepared and a system friction chart prepared that will show static head and total dynamic head for both single and multiple pump operation. The chart shall also show the pump performance curve for both single and multiple pump operation. If the force main discharges into another force main, the existing and ultimate head conditions of the receiving force main shall be addressed in the calculations. Where variable speed pumping is contemplated, pump performance curves shall show performance at maximum speed, minimum speed just above static head, and several intermediate speeds that will clearly indicate pump operation. The system friction curves shall illustrate the effect of wet well level on system friction.

6. Consideration shall be given to design that produces minimum power requirements to accomplish the functions required. If requested, supporting data shall be furnished to the Department.

3.11.5 PUMP STATION STRUCTURAL DESIGN

1. Perform and submit adequate soil borings and soils testing to design the pump station foundation.

2. The station shall be designed in accordance with International Building Code, City of Suffolk Building Codes, Special Inspection Document for Hampton Roads, RTS, VDEQ SCAT Regulations and this PFM. Submit structural calculations sealed and signed by a Professional Engineer licensed in the Commonwealth of Virginia and regularly engaged in the design of concrete structures.

3. In addition to conventional design procedures, the following areas shall be addressed:

   A. The effect of hydraulic thrust shall be countered by the use of pipe anchorage or other suitable means to prevent movement of pumping equipment and pipelines. The number of bends shall be as few as possible.

   B. Structural requirements for force mains shall include the proper selection of materials and strengths of pipe and pipe accessories. This will involve a study of anticipated trench conditions and bedding methods. The minimum depth of cover shall be governed by depths of other utilities and hydraulic gradient; however, not less than three (3) feet of cover shall be provided.

   C. Structural requirements for crane loads at the maximum rated crane load.

   D. Buoyancy calculations are to be submitted for the dry well, wet well and vaults.

3.11.6 PRIVATE GRINDER PUMP STATIONS

1. General Requirements:

   A. The use of private grinder pump stations shall be only as approved by the Department.

   B. Grinder pump sewer systems shall not be installed and used in lieu of the orderly extension of gravity sewers with the development of intervening properties. Grinder pump installation and use under these circumstances shall be limited to:

      1. New private sewer connections where a public gravity sewer is contiguous to the property, but terrain or natural features prohibit a gravity connection.

      2. New sewer connections for the conversion of on-site sewer systems to public sewer or for infill development only where it is specifically determined by Department to be in the best interest of the City.

   C. For single-family residential use, pumping unit shall be E-One semi-positive displacement grinder pump, with associated alarm panel and pump basin. This station shall only be allowed for single-family domestic-type flows. Single family grinder pump stations shall be owned and maintained by the property owner. The property owner shall maintain a maintenance/service contract with a registered pump station maintenance contractor.

   D. For small industrial/small commercial use: Pumping units shall be duplex grinder pumps as allowed on the Department's Approved Products List. This station shall only be allowed for small commercial/industrial type flows. Small

commercial/industrial grinder pump stations shall be owned by the property owner. The property owner shall maintain a maintenance/service contract with a registered pump station maintenenace contractor.

E. Grinder pumps and sewer service laterals on site which are installed as part of a grinder pump sewer system for building sewers shall be purchased, owned, operated and maintained by the property owner, all in accordance with State and Local Health Department, VDEQ, and local building codes. Construction of private grinder pump systems shall be in accordance with this PFM.

F. All sewerage facilities within right-of-way or easement including but not limited to grinder pump force mains shall be publicly owned and maintained.

G. Grinder pump facility shall be modular package by manufacturer including pumps, wet well, controls, and ancillary piping. Private grinder pump stations shall follow the requirements of the Private Grinder Pump Stations Details in Appendix F, Standard Details, of this PFM. All grinder pumps will remain private and be the sole responsibility of the property owner.

3.12 FORCE MAINS

1. The Department will provide direction to the Owner/Applicant in sizing the force main based on flows and layouts provided by the Owner/Applicant.

2. Although constructed as parcels or sub-systems, all force main pipe and related facilities of all proposed developments shall be approved on the basis of their functional integration with the City's total public sewer system.

3. For purposes of construction, the Contractor shall utilize the plans approved by the Department.

4. Force main horizontal locations shall generally conform to the requirements for water mains as outlined in this PFM. Easement requirements for force mains shall be the same as that stated for water mains in this PFM.

5. Force mains shall have a positive slope from the pump station to the point of discharge unless unusual conditions make it impractical. Where manual air relief valves shall be installed, a positive slope shall be maintained toward high points, and a negative one toward low points. Every effort shall be expended to maintain the force main below the hydraulic gradient.

6. Every effort shall be made to maintain a full force main under normal operating conditions.

7. Sizing of the force main shall be such that velocity shall be a minimum of two (2) ft./sec. for self-scouring velocity. A maximum velocity of eight (8) ft./sec. shall not be exceeded. The minimum cover on force mains shall be three (3.0) feet. Any force main having less than three (3.0) feet of cover from finished grade to the top of pipe or in Permanent Public Utility Easements shall be constructed of ductile iron pipe.

8. All force main pipe and fittings eight (8) inch and larger shall be cement mortar lined ductile iron pipe. PVC – C900 may be allowed on a case-by-case basis upon Department approval. For force mains smaller than eight (8) inch, PVC – C900 will be allowed. All PVC force main pipe shall be green in color. Single family residential and small commercial/industrial grinder pump force mains within the public right-of-way shall be a minimum of 2 inch HDPE pipe. All HDPE force main pipe shall have a green stripe running down its entire length.

9. Isolation valves shall be installed at a spacing of no greater than 1,000 feet. Isolation valves shall be required on each side of all wetland/creek crossings. Force main isolation valves shall be gate valves.

10. Structural requirements shall be addressed in the design of all force mains and appurtenances in accordance with the requirements of PFM Section 3.9.2.4, Structural Design of Pipe System.

END OF SECTION

CHAPTER 4

CONSTRUCTION

2017 RELEASE 1

This page intentionally left blank.

4.0 CONSTRUCTION

Construction cannot begin until all plan approvals have been obtained, all Permits have been acquired and all fees have been paid.

4.1 PERMITS

1. The following Permit and Bonds (as applicable), administered by the Department of Public Works, are required prior to start of construction:

   A. Right of Way Permit;

   B. Ancillary Bond for Sidewalks;

   C. Defect Bond;

   D. Erosion and Sediment Control Bond; and,

   E. Land Disturbance Permit.

2. The following Permits and Bonds (as applicable) administered by Neighborhood Development Services are required prior to the start of construction:

   A. Building Permit;

   B. Demolition Permit;

   C. Electrical Permit;

   D. Mechanical Permit;

   E. Plumbing Permit;

   F. Sign Permit; and,

   G. Zoning Permit

3. It is the sole responsibility of the Project Owner/Developer/Contractor to secure all regulatory agency approvals and permits required for the prosecution of work associated with projects within the City of Suffolk.

4.2 TIME LIMITS

Approved Construction Plans are valid for a specific period of time. Contact the Planning Department for time limits in which construction shall be completed.

4.3 PRE-CONSTRUCTION PROCEDURES

1. Construction operations in public streets, roads or alleys, shall be confined to as small a space as is practicable and shall be subject at all times to the approval of the Department of Public Work's Traffic Engineer. Unless otherwise directed by the Department or the Traffic Engineer, the Contractor shall perform the proposed construction as follows:

   A. Apply for and obtain all construction permits required. Pay the fees that apply for water and sewer connections. Refer to the Department's current Fee Schedule for the cost of water and sewer connections.

   B. Notify the Department and Traffic Engineer not less than forty-eight (48) hours before work is to start. A Department construction inspector shall be assigned to the job before work may commence.

   C. Contact the Traffic Engineer in regard to the permitted working hours and the required signing and barricading which shall be used while working in the public right-of-way. Submit approved permit and any modifications to the Department.

   D. Proper signs and barricades shall be used at all times. All signs and barricades shall conform to the standards indicated in the Virginia Department of Transportation's (VDOT) Work Zone Safety, Guidelines for Temporary Traffic Control. Additional signs, barricades, flaggers and other traffic control devices shall be used on heavily traveled roads when required by the Department and/or the Traffic Engineer.

   E. The Department (757-514-7000) and Miss Utility of Virginia (811) shall be notified a minimum of forty-eight (48) hours prior to the commencement of work for any utilities project within the City. Repeat notification may be required as noted in the Code of Virginia. Failure to provide proper notification may result in rejection of work performed.

4.4 COORDINATION

1. If a partial project completion is contemplated, a phasing plan shall be provided to the Department for approval. This phasing plan shall be prepared and submitted by the Engineer of Record (EOR) for review and approval by the Department. Proper valving and flushing points shall be provided at each Phase division point. Proper sanitary sewer end-of-line structure shall be provided at each Phase division point.

2. All phases of the construction which involve the Department's utilities shall be scheduled for consultation with the Project Owner/Developer and the Department or their representative. Liaison in this matter shall be required before beginning work. The Contractor shall fully pay all required fees and shall give not less than forty-eight

(48) hours of notice in advance of the need for making any connections to the existing water or sanitary sewer system. The Department may disapprove the time and date of any and all connections and will advise the Contractor as to a suitable time and date.

3. The Contractor shall not tap, cut into, or otherwise disturb any water main or sanitary sewer in the City without approval from the Department.

4.5 PROJECT MEETINGS

1. A pre-construction conference with the Department and the Contractor shall be scheduled before beginning any work on the Project.

2. Progress meetings will be held at regular intervals. The time and location shall be subject to approval of the Department.

4.6 SUBMITTALS

1. Use of the words "Contract", "Contract Documents", "Project Contract Documents", "Award of the Contract", "Effective Date of the Agreement", and "bids" relate to City of Suffolk CIP projects. Non-CIP projects may disregard the language and requirements related to these referenced words.

2. Use of the word "Department" herein refers to the City of Suffolk Department of Public Utilities.

3. The Department maintains a list of Approved Products and Materials (APM) that may be used in construction projects in the City of Suffolk. The intent of this list is to simplify the design process and the submittal process during Construction. Items incorporated into Project designs that appear on the APM List have previously been reviewed and accepted by the Department. Generally, items that appear on the APM List do not require detailed submittal, except where specified in the Contract Documents.

4. Submit a detailed list of products and materials that are proposed to be used in the Construction project. Identify those items that are on the APM List.

5. "Or-Equals"

   A. Award of the Contract shall be on the basis of materials and equipment specified or described in the Project Contract Documents without consideration of possible "or-equal" items. Whenever it is specified or described in the Project Contract Documents that an "or-equal" item of material or equipment may be proposed by the Contractor, application for such acceptance will not be considered until after

the Effective Date of the Agreement. "Or-equal" items may be submitted for review under the circumstances described below.

1. "Or Equal" Items: Where allowed by the contract documents and submitted for consideration by the Contractor, "or equal" items will be reviewed by the EOR. If in the EOR's opinion an item of material or equipment proposed by the Contractor is functionally equal to that named and sufficiently similar so that no change in related Work will be required, the EOR will make a recommendation to the Department for approval. If the item submitted is not functionally equal and/or requires significant change to the Work, it shall be rejected by the EOR. The final decision to accept an "or equal" item, when recommended by the EOR shall be at the sole discretion of the Department. For the purposes of this Paragraph, a proposed item of material or equipment may be considered functionally equal to an item so named if:

   a. If it is determined that:

      1) It is at least equal in materials of construction, quality, durability, appearance, strength, and design characteristics;

      2) It will reliably perform at least equally well the function and achieve the results imposed by the design concept of the completed Project as a functioning whole;

      3) It has a proven record of performance and availability of responsive service; and

   b. Contractor certifies that, if approved and incorporated into the Work:

      1) For CIP Projects, there will be no increase in cost to the Department and no increase in Contract Times, and

      2) It will conform substantially to the detailed requirements of the item named in the Contract Documents.

6. Product Substitutions – Major Equipment

   A. Award of the Contract shall be on the basis of materials and equipment specified or described in the Project Contract Documents without consideration of possible substitute items. Whenever it is specified or described in the Project Contract Documents that a "Substitute" item of material or equipment may be proposed by the Contractor, application for such acceptance will not be considered until after

the Effective Date of the Agreement. Substitute items may be submitted for review under the circumstances described below.

1. Requests for Substitution – General:

   a. Base all bids on materials and equipment as specified in the Contract Documents.

   b. Each substitution request shall be a separate submittal.

   c. If the Contractor elects to propose a substitution, the Contractor shall initially notify the EOR that by use of the substitute they will be able to achieve one or more of the following:

      1) An increase in quality of the item provided.

      2) A savings in project cost that will be passed along to the Department.

      3) A reduction in the project schedule.

   d. Substitutions that do not provide for an increase in quality, savings to the Department or a reduction in project schedule shall not be considered.

   e. The EOR shall provide the Department a preliminary recommendation regarding the substitution based on if the increased benefit to the Department is sufficient to warrant the additional review expense. The Department shall have sole discretion on proceeding with the Substitution review.

   f. If the Department elects to proceed with the Substitution review, the Contractor shall initiate a formal submittal for review. The Department shall have sole discretion regarding the acceptability and acceptance of the proposed Substitution. If the Substitution is rejected by the Department, the Contractor shall proceed with the work in accordance with the Contract Documents without recourse.

B. In making request for substitution, the Contractor represents:

   1. Contractor has investigated the proposed product, and has determined that it is equal or superior in all respects to that specified, and that it will perform function for which it is intended.

2. Contractor will provide the same guarantee or better for substitute item as for product specified.

3. The Contractor will coordinate installation of accepted substitution into work, to include any modifications if necessary, making such changes as may be required for work to be complete in all respects.

4. Contractor waives all claims for additional costs related to the substitution and it's inclusion into the work which subsequently arise.

C. Submittal Mechanics: Follow the transmittal mechanics prescribed for shop drawings in the Project Contract Documents, Submittals. Include in the transmittal letter, either directly or as a clearly marked attachment, the items listed in the paragraphs below.

1. Product Identification:

   a. Manufacturer's name.

   b. Telephone number and representative contact name.

   c. Location (address) of nearest product service center.

   d. Specification section or drawing reference of originally specified product, including discrete name or tag number assigned to original product in the Project Contract Documents.

2. Manufacturer's literature clearly marked to show compliance of proposed product with Project Contract Documents.

3. Itemized comparison of original and proposed product addressing product characteristics including but not necessarily limited to:

   a. Size.

   b. Composition or materials of construction.

   c. Weight.

   d. Electrical or mechanical requirements.

4. Product Experience:

    a. Location of past projects utilizing product and date of installation.

    b. Name and telephone number of persons associated with the product that can provide an opinion on their experience with the product.

    c. Available field data and reports associated with proposed product.

5. Data relating to changes in construction schedule.

6. Data relating to changes in cost.

7. Samples:

    a. At request of Department.

    b. Full Size if requested by Department.

    c. Held until substantial completion.

    d. Department not responsible for loss or damage to samples.

8. Explanation/summary of benefit to the Department in time, quality and cost savings.

D. Approval of a substitution will not relieve Contractor from the requirement for submission and approval of Shop Drawings as set forth in Project Contract Documents.

E. In event substitution results in a change of Contract price or time, provisions in the Project General Conditions will be applied for adjustment.

7. Pump Station Operations and Maintenance (O&M) Manual

A. An Operations and Maintenance (O&M) Manual shall be prepared in accordance with the VDEQ SCAT Regulations and shall be approved by the Department prior to commencement of the field tests and before the Department will accept the station into the City's system. The manual shall contain complete operating information for all equipment, a complete set of approved shop drawings and a copy of the Record Drawings (prepared in accordance with the requirements of Appendix E – Record Drawings). The Record Drawings shall be updated to include all plan revisions and field changes made during bidding and construction.

One complete hard (paper) copy of the O&M Manual shall be submitted for Department review and approval. Upon Department approval, submit one additional hard copy and one electronic copy on CD ROM.

B. The electronic copy of the O&M Manual shall include all materials in the hard copy and shall be submitted in pdf format. The pdf file shall be prepared as follows: manual cover opens in initial view; initial view magnification set to "fit page"; hyperlinked Table of Contents; searchable; bookmarked major components; bookmark pane on the left side of the window should always open with the initial view; sub category bookmarks deleted; landscape sheets rotated so they are readable without further rotation; pdf is NOT password protected.

4.7 MATERIALS AND EQUIPMENT

1. All products furnished and installed shall be new and manufactured within two (2) years of the date of installation (unless otherwise approved by the Department) and be listed on the Department's current Approved Products and Materials list.

2. Inspect and verify all delivered materials prior to installation.

   A. All damaged materials shall be rejected, promptly removed from the site and replaced with approved materials.

   B. Any materials delivered to the site not previously approved by the Department, shall be rejected, promptly removed from the site and replaced with approved materials.

3. Manufactured and Fabricated Products

   A. Manufacturer's name or identifiable trademark shall be integrally cast, stamped, or otherwise permanently marked on each item.

   B. Design, fabricate, and assemble in accordance with the best engineering and shop practices.

   C. Manufacture like parts of duplicate units to standard size and gages, to be interchangeable.

   D. Multiple Units: When two or more units of the same type or class of materials or equipment are required, these units shall be the product of one manufacturer.

   E. Products shall be suitable for service conditions.

   F. Equipment capacities, sizes, and dimensions shown or specified shall be adhered to unless variations are specifically approved in writing by the Department.

G. Do not use material or equipment for any purpose other than that for which it is designed or is specified.

H. Except as specifically indicated or specified, materials and equipment removed from existing facilities shall not be used in the completed work.

4. Storage and Protection

A. Packing, shipping, handling and storage shall be in accordance with Manufacturer's recommendations, with seals and labels intact and legible.

B. Maintain temperature and humidity within the ranges required by manufacturer's instructions.

C. Store products subject to damage by the elements in weather tight enclosures.

D. Exterior Storage

1. Store fabricated products above the ground on blocking skids; prevent soiling and staining. Cover products which are subject to deterioration with impervious sheet coverings; provide adequate ventilation to avoid condensation.

2. Store loose granular materials in a well-drained area on solid surfaces to prevent mixing with foreign matter.

3. Arrange storage in a manner to provide easy access for inspection. Make periodic inspections of stored products to assure that products are maintained under specified conditions and are free from damage or deterioration.

E. Protection after Installation

Provide substantial coverings as necessary to protect installed products from damage from traffic and subsequent construction operations. Remove when no longer needed.

4.8 EXISTING CITY UTILITIES

1. Any deviations from the information shown on the Plans and Miss Utility marks shall be brought to the Department's attention. Resolve any conflicts which impact the construction subject to Department approval.

2. Carefully protect existing City utilities. Any damage to City-owned utilities caused by the work shall be immediately reported to the Department. The Department shall

direct the Contractor to repair the damaged utilities or shall initiate its own repair activities.

3. At the Department's discretion, the Contractor shall bear the entire cost of such repairs as determined by the Department. Where appropriate, the Department will deduct the cost from the Contractor's invoice. Where appropriate, the Contractor shall reimburse the Department for the cost of repairs prior to project acceptance.

4.9 EXISTING PRIVATE UTILITIES

1. Locate existing private utilities in accordance with the best information available. Any deviations from the information shown on the Plans shall be brought to the Department's and utility owner's attention. Resolve any conflicts which impact the construction subject to Department and utility owner's approval.

2. Existing private utilities shall be carefully protected. Any damage to privately-owned utilities caused by the work shall be immediately reported to the Department and the utility owner. Any repairs to the private utilities shall be at the expense of the Contractor.

4.10 SHUTDOWNS AND TIE-INS

1. Connections to Existing Facilities: If any connections, replacement, or other work requiring the shutdown of an existing facility is necessary, schedule such work at times when the impact on the Department's normal operation is minimal. Overtime, night and weekend work may be required to make these connections.

2. Request for Shutdowns: Submit a written request for each shutdown to the Department at least seventy-two (72) hours in advance of any required shutdown.

3. All shutdowns to existing plant and pumping facilities shall be kept to an absolute minimum duration. Shutdowns and tie-ins to existing facilities shall be done in a manner and at a time approved by the Department. A detailed plan of each shutdown and tie-in (including procedure and timetable) shall be submitted for the Department's approval. The detailed plan shall be submitted well in advance of the date scheduled for starting such work, to allow time for review by the Department and for making revisions to the plan as may be required.

4. No shutdowns shall be made to any part of the existing plant or pumping facilities without the permission of the Department. The Department shall make all shutdowns unless otherwise approved by the Department.

5. To keep shutdowns to an absolute minimum time:

   A. Do all preparatory work possible at each place of work prior to the specified facility being taken out of service.

   B. Have adequate personnel and equipment to work simultaneously, if required, at more than one location of shutdown work.

   C. Work continuously more than the regularly scheduled working day or work double shifts, if directed by the Department.

   D. Perform work at a time of day, night or on weekends when the least demand on the plant or pumping facility exists as directed by the Department.

   E. Use non-shrink grout or high early-strength concrete at those connection points which may require new concrete work to be joined to existing.

   F. Provide all temporary connections and/or controls to operate equipment which may be necessary until final connections and/or controls are complete.

4.11 EARTHWORK

1. This section shall be used to establish the minimum requirements for earthwork related to water and sanitary sewer systems, including pump stations. Utility projects, including pump stations, are required to have a geotechnical investigation and report with foundation recommendations and construction practices submitted to the Department for review and approval as an integral part of the Design process. This geotechnical investigation for pump stations shall include, as a minimum, two soil borings; one soil boring extending down at least fifteen (15) feet beyond the proposed bottom of the wet well excavation; and one soil boring extending down at least ten (10) feet beyond the bottom of the valve vault/building excavation. Deep foundation design may require a greater depth.

2. Where conflicts exist between this Section and the Project-specific geotechnical report, the more stringent requirements of the two (as determined by the Department) will apply.

3. Trenching, subgrade preparation, and backfilling includes, but is not limited to clearing, preparing, grading, excavating, filling, backfilling, and compacting of soils as necessary to accomplish finished construction as indicated on the plans.

4. Excavation for Mechanical/Electrical Work: Excavation and backfill required in conjunction with underground mechanical and electrical utilities and buried mechanical and electrical appurtenances is included as work of this section.

4.11.1 GEOTECHNICAL SUBMITTALS

1. The following shall be submitted to the Department for review and acceptance:

   A. Laboratory analysis of each soil material proposed for fill and backfill from on-site and borrow sources. Laboratory analysis shall include grain-size distribution, Atterberg limits, moisture density relationship, and natural moisture content. The submittal shall include certification that the material is in accordance with borrow material as specified herein.

   B. Certification that fill material has been placed in accordance with and compacted to the specified level in the contract documents. The fill compaction certification shall be prepared signed and sealed by a Professional Engineer registered in the Commonwealth of Virginia.

   C. Certification that the subgrade has been inspected and is capable of supporting the structure. The subgrade certification shall be prepared signed and sealed by a Professional Engineer registered in the Commonwealth of Virginia.

   D. When deep foundation elements are included in the project certification that the deep foundation elements have been installed in accordance with the project specifications and that they are capable of supporting the design load. The deep foundation certification shall be prepared, signed and sealed by a Professional Engineer registered in the Commonwealth of Virginia.

4.11.2 QUALITY ASSURANCE

1. Engage a soil testing and inspection service for quality control testing during earthwork operations. The independent testing and inspection firm shall be obtained and paid for by the Project Owner/Developer. The testing and inspection firm shall not be directly employed by the trenching, subgrade preparation, or backfilling Contractor.

2. Tests performed by the independent testing firm shall be in randomly selected locations and in sufficient numbers to verify that the specified density is being obtained. The following number of field density tests shall be the minimum acceptable for each type operation:

   A. Fills: One test per lift per 10,000 square feet or fraction thereof.

   B. Backfill Against Structures: One test per lift per 100 linear feet.

   C. Trench Bedding and Backfill: One test per lift per 400 linear feet.

3. If the compaction test results do not meet those specified, the material shall be removed, replaced, re-compacted, and retested to meet the specification requirements.

4.11.3 PROJECT CONDITIONS

1. Perform a Pre-excavation Site Survey: Document existing conditions of adjoining construction and site improvements, including finish surfaces, which might be misconstrued as being damaged by earthwork operations before earthwork operations begin. Arrange for photo and/or video documentation.

2. Obtain a Land Disturbing Permit prior to all earthwork and excavation activities.

3. Marked utilities: Maintain all utility markings marked by Miss Utilities throughout the duration of the project.

4. Existing Utilities: Locate existing underground utilities in areas of work. If utilities are to remain in place, provide adequate means of support and protection during earthwork operations. Should uncharted, or incorrectly charted, piping or other utilities be encountered during excavation, notify the Department. Do not interrupt existing utilities without notifying the Department. Provide a minimum of two (2) weeks of notice and await notice to proceed before interrupting any utilities.

5. Protection of Persons and Property: Flag and barricade open excavations occurring as part of this work. Protect structures, utilities, sidewalks, pavements and other facilities from damage caused by settlement, lateral movement, undermining, washout, and other hazards created by earthwork operations.

4.11.4 PRODUCTS

1. On-Site Soils:

   Only select fill meeting the requirements herein will be allowed to be put back in the trench or used as backfill. On-Site Material shall not be used for backfill unless it can be shown to meet the requirements of select fill as described herein and as certified by a licensed geotechnical engineer. If on-site material is utilized, the frequency of certification shall be as directed by the Department.

2. Select Fill:

   Select fill shall be VDOT Select Fill Type I, Type II or Type III.

3. Bedding:

   Bedding for pipe and structures shall be compacted VDOT No. 57 stone.

4.11.5 EXECUTION

1. General

   A. Conduct a pre-excavation site meeting: meeting conducted at project site to clarify existing conditions and project specific hazards and tasks prior to excavation.

   B. Protect structures, utilities, sidewalks, pavements, and other facilities from damage caused by settlement, lateral movement, undermining, washout and other hazards created by earthwork operations.

   C. Protect subgrades and foundation soils against freezing temperatures or frost and excessive drying or wetting. Provide protective insulating materials as necessary.

   D. Protection of Personnel: Flag and barricade open excavations occurring as part of this work.

   E. Provide erosion control measures to prevent erosion or displacement of soils and discharge of soil-bearing water runoff or airborne dust to adjacent properties and walkways.

2. Clearing and Grubbing

   A. Clearing and grubbing will be required for all areas indicated on the plans to be excavated, improved on or which fill is to be constructed. All cleared and grubbed materials, including trash, shall be legally disposed of.

   B. Clearing shall consist of removal and disposal of trees, shrubbery, including roots, and other vegetation as well as brush and rubbish within the areas to be improved and constructed upon.

   C. Grass, grass roots and incidental topsoil shall not be left beneath fill area, nor shall this material be used as fill or backfill material.

3. Excavation and Subgrade Preparation

   A. Excavate to contours, shapes, dimensions and elevations required for the work indicated on the plans; extend sufficiently to permit form placing, inspection and removal.

   B. When excavation has reached required subgrade elevations, the Project Owner/Developer’s Geotechnical Engineer shall inspect the subgrade to verify its ability to support the intended structure, roadway, or fill embankment.

C. Subgrade inspection shall at a minimum consist of an on-site visual inspection of the subgrade. As determined necessary by the Project Owner/Developer's Geotechnical Engineer, proof rolling, test pits, probing or other exploratory efforts shall be utilized to determine the suitability of the subgrade.

D. Delays in construction beyond twenty-four (24) hours of an inspection of the subgrade warrant a re-inspection of the subgrade. Subgrade areas which have been rained on shall be re-inspected.

E. Stability of Excavations: Slope sides of excavations where possible in accordance with OSHA 1926.650. Shore and brace where sloping is not possible because of space restrictions or stability of material excavated. Maintain sides and slopes of excavations in safe condition until completion of backfilling.

F. Dewatering: Prevent surface water and subsurface or groundwater from entering excavations, from ponding on prepared subgrades, and from flooding project site and surrounding area. Remove water to prevent softening of foundation bottoms, undercutting footings, and soil changes detrimental to stability of subgrades and foundations.

G. Fill placement shall be observed by the Project Owner/Developer's Geotechnical Engineer.

4. Compaction

A. Fill and backfill material shall be placed in approximately horizontal layers that, before compaction, shall not exceed eight (8) inches in thickness. Fill and backfill material within five (5) feet of structures shall be placed in approximately horizontal layers that, before compaction, shall not exceed six (6) inches in thickness. Each layer shall be spread uniformly and evenly. All voids shall be carefully filled and the material properly compacted by rolling, tamping, or vibratory compactors. Compaction by heavy rollers or other heavy equipment is prohibited within five (5) feet of any structure.

B. The fill or backfill shall be constructed in such a manner that the surface will be sloped to drain at all times and shall be sealed by rolling at the completion of each day or prior to rain. Materials containing free water or having a moisture content higher than specified shall not be deposited upon the fill or backfill until after they have been dried to the specified moisture content.

C. No fill or backfill shall be placed, spread or rolled while it is frozen or thawing or be placed upon frozen or thawing ground or during unfavorable weather conditions. Any compacted layer that has been previously frozen shall be reworked or removed before the next layer is placed.

D. Select fill material shall be within two percent (2%) above or below the optimum moisture content for the material while placing and during compaction. After each layer has been placed, mixed and spread evenly, it shall be thoroughly compacted to not less than ninety-five percent (95%) of its maximum dry density determined by ASTM 689 Standard Proctor method.

E. Weaving or creeping of the soil beneath the roller shall be sufficient evidence that the moisture content of the fill or subsoils is excessive, and that required compaction has not been achieved.

F. Select fill material placed in unimproved areas ten (10) feet and beyond, structures, roadways, pipes or other improved areas shall be compacted to not less than ninety percent (90%) of its maximum dry density determined by ASTM 689 Standard Proctor method.

5. Topsoil, Sodding, Seeding and Mulching

   Strip all topsoil to depths in which found. The topsoil shall be carefully segregated from the trench materials and stockpiled for reuse in the work. Upon completion of the excavation work, replace the topsoil to the depths in which found and to a minimum depth of four (4) inches.

6. Disposal of Excess Material

   Excess excavated material shall be disposed of off-site. A Soil and Erosion Control Plan shall be submitted and approved for the disposal site(s).

4.12 DUCTILE IRON PIPE

1. See Department's current Approved Products and Materials List for allowable Manufacturers.

2. Ductile iron pipe shall be minimum thickness Class 50, cement lined.

3. Install ductile iron pipe in strict accordance with the manufacturer's instructions.

4.13 PVC PIPE

1. See Department's current Approved Products and Materials List for allowable Manufacturers.

2. Install PVC pipe in strict accordance with the manufacturer's instructions.

3. Install detectable tape identifying PVC water line pipe with words "CAUTION: WATER LINE BURIED BELOW" six (6) to twelve (12) inches above the pipe.

4. Install detectable tape identifying PVC pressure sewer line pipe with words "CAUTION: SEWER LINE BURIED BELOW" six (6) to twelve (12) inches above the pipe.

5. Copper Tracer Wire: Copper tracer wire consisting of No. 10 AWG solid, single conductor, insulated copper wire shall be installed in the trench with all piping to permit location of plastic pipe with electronic detectors. The wire shall not be spiraled around the pipe nor taped to the pipe. Wire connections are to be made by stripping the insulation from the wire and soldering with rosin core solder. Solder joints shall be wrapped with rubber tape and electrical tape.

4.14 RESTRAINED JOINTS

1. Construct sections of piping requiring restrained joints using pipe and fittings with restrained “locked-type” joints which shall be capable of holding against withdrawal for line pressures fifty percent (50%) above the normal working pressure but not less than 200 psi. The pipe and fittings shall be restrained push-on joints or restrained mechanical joints.

2. Restrained pipe lengths shall be designed by the Engineer of Record and shall be shown on the plans in the profile.

3. Ductile iron mechanical joint and PVC bell and spigot joint restraining devices shall be listed in Department’s current Approved Products and Materials List.

4. All bends, tees, valves, and dead ends (including fire hydrants) shall be securely restrained.

5. Where ductile iron pipe manufactured with restrained joints is utilized, all restrained joints shall be fully extended and engaged prior to backfilling the trench and pressurizing the pipe.

6. Ductile iron mechanical joint fittings used with PVC pipe shall be restrained where shown on the plans, as required by this PFM, or otherwise required by project conditions.

4.15 PIPE LAYING

1. Stockpiled pipe materials shall be handled by mechanical equipment and placed to avoid interference with traffic and the trenching operation. Care shall be taken in loading, transporting, and unloading to prevent injury to the pipe or coatings. Pipe or

fittings shall not be dropped. All pipe or fittings shall be examined by the Department prior to installation, and no piece shall be installed which is found to be defective. Any damage to the pipe, lining and/or coatings shall be replaced or repaired as directed by the Department.

2. If any defective piping is discovered after it has been laid, it shall be removed and replaced by the Contractor with a sound pipe in a satisfactory manner at his own expense.

3. Where new piping is to be connected to existing piping, the Contractor shall drain or purge the existing piping, cut, remove, grind and prepare the existing piping in every respect in order that it is suitable for connecting to the new piping.

4. Where existing pipe is to be abandoned and/or removed, the Contractor shall not reuse the existing pipe. Pipes that have been removed shall be removed from the project sites and disposed of by the Contractor at an approved disposal site.

5. Provide a stakeout of design alignment and grade by a licensed surveyor prior to installation.

6. All piping shall be installed to the lines and grades as shown on the plans. All pressure piping shall be installed on a uniform grade to minimize low points and high points.

7. Before the pipe is lowered into the trench, each section of pipe shall be swabbed or brushed out to ensure that no dirt or foreign material gets into the finished pipe. Every precaution shall be taken to prevent foreign material from entering the pipe while it is being placed.

8. When installing pipe in the trench, proper implements, tools and facilities (as recommended by the material manufacturer) shall be provided and used by the Contractor for the safe and appropriate installation. All pipe, valves, fittings and hydrants and accessories shall be carefully lowered into the trench piece-by-piece, by means of derricks, ropes, slings, or other suitable tools or equipment in such a manner as to prevent damage to protective coatings and linings. In no case shall pipe or fittings be beat on with anything. Lifting equipment shall be satisfactorily rated to handle the pipe and fittings required. Under no circumstances shall materials be dropped or dumped into the trench.

9. During the laying operation no debris, tools, clothing or other foreign materials shall be placed in the pipe and the trench shall be kept free of water. Before joining the pipe, all lumps, blisters, excess coating material, oil or foreign material shall be removed from the bell and spigot ends of the pipe and fittings shall be kept fully closed to prevent earth, water, or other substances from entering the pipe. Closure method to be approved by Department prior to installation.

10. Exercise extreme care when installing piping by shoring up and/or protecting all existing utilities and structures from damage.

11. Do not lay pipe on unstable material, in wet trench, or when trench or weather conditions are unsuitable. Do not lay pipe in same trench with other pipes or utilities unless shown otherwise on plans.

12. Bedding shall be provided for all pipes in accordance with this PFM. The bottom of the trench shall be carefully shaped to the curvature of both the bell and barrel of the pipe. Continuous and uniform bedding shall be provided in the trench for all pipes so that the pipe barrel bears on and is supported at every point between bell holes. Over excavation below the specified grade shall be backfilled with approved granular material and thoroughly compacted. The finished sub-grade shall be prepared accurately.

13. Unsuitable bedding shall be removed and replaced as required in the Earthwork Section herein.

14. Hold pipe securely in place while joint is being made.

15. Protect pipes in trenches until covered by layers of earth compacted in place to a depth of twelve (12) inches over pipe.

16. Restrain pipe at valves, fittings and hydrants as shown on the plans.

17. Pipe shall be laid true to line and grade and shall be joined together such that the completed pipe will have a straight horizontal and vertical alignment. After placing a length of pipe in the trench, the spigot end shall be centered in the open bell of the previously laid pipe and the joint completed in accordance with pipe manufacturer instruction manual.

18. All joints shall be watertight and any leaks or defects discovered shall be immediately repaired to the satisfaction of the Department. Any pipe which has been disturbed after being laid shall be taken up, the joints cleaned and the pipe properly re-laid. Any superfluous material inside the pipe shall be flushed or removed by means of an approved follower or scraper after joints are made. Care shall be taken to not damage pipe and/or the lining. Installation of fittings and pipe joints shall be in strict accordance with the manufacturer's recommendations.

19. Joints of all types shall be made in strict accordance with the manufacturer’s instructions.

20. The cutting of pipe for inserting valves, fittings or closure pieces shall be done in a neat and workmanlike manner in accordance with manufacturer’s recommendations.

Pipe cuts shall be made by mechanical equipment designed for the purpose without damage to the pipe or lining in order to leave a smooth end at right angles to the axis of the pipe. Bevel cut ends of pipe to be used with push-on bells to conform to the manufactured spigot end. Only qualified and experienced workmen shall be used to cut pipe.

21. Wherever it is necessary to deflect pressure pipe from a straight line either in the vertical or horizontal plane to avoid obstructions or to plumb stems, or where long-radius curves are permitted by the Department, the amount of deflection allowed shall not exceed fifty percent (50%) of that required for satisfactory joining of the pipes, as specified by the AWWA and the manufacturer's recommendations. Pipe shall be installed as described above in a straight line, and then deflected as necessary. If the specified or required alignment requires deflections exceeding those recommended, the Contractor shall provide bends approved by the Department.

22. Road crossings shall be installed in accordance with the requirements of this PFM which governs the method, and materials of such construction. The Contractor shall obtain all necessary permits prior to actual installation.

23. Pipe connections to existing manholes shall be core bored in such a manner that the finished work will conform as nearly as practical to the essential, applicable requirements for new manholes, including all necessary concrete work, cutting and sloping. Line connections to the manhole shall be made with a flexible boot in accordance with the PFM details.

24. No pipe shall be installed in water, or when, in the opinion of the Department, trench conditions are unsuitable. No pipe shall be installed upon a foundation in which frost exists or at any time that there is danger of the formation of ice or penetration of frost at the bottom of the excavation.

25. Rubber gasket, "O" ring type joint pipe shall be installed true to line and grade. After placing a length of pipe in the trench the spigot end shall be centered in the open bell of the pipe previously installed and the joint completed in accordance with the pipe manufacturer’s recommendations. The trench pipe interface shall be shaped to the curvature of both the bell and barrel of the pipe. The trench shall be kept free of water while the work is in progress. The ends of the pipe shall be brushed clean so that proper joints can be made. As the work progresses the interior of the pipe shall be cleared of dirt, cement, or other superfluous material. The exposed end of all pipes shall be fully closed to prevent earth, water, or other substances from entering the pipe. Should dirt or other materials enter the previously installed pipe, the pipe shall be immediately cleaned with care taken to preserve any coatings or linings.

26. Gravity sewer pipe shall be installed on standard bedding in accordance with the PFM details. Where mechanical joints are specified for ductile iron pipe and fittings, the joint shall be thoroughly coated with lubricant, the gasket and gland properly

positioned, bolts inserted and diametrically opposite bolts drawn up until all bolts are tight.

4.16 SPECIAL CROSSINGS

1. Above Water Crossings

   A. Where a water main or sewer force main crosses above surface water, the pipe shall be adequately supported, completely insulated to protect it against freezing, accessible for repair or replacement and above the level of a 100-year flood and any floating debris the flood water may carry. Pipe shall be ductile iron, mechanical joint pipe of the same size interior diameter as the water main or sewer force main. Water crossings shall have isolation valves on both sides of the watercourse. Above water crossings shall only be used where approved by the Department.

   B. Above water crossings shall be installed in accordance with the Department-approved plans for the construction project. Above water crossings shall be tested in place and show zero leakage. Provisions for such test shall be incorporated in the design.

2. Underwater Crossings

   A. Underwater crossings shall be directionally drilled using products and procedures approved by the Department.

   B. Valves shall be provided at both ends of the water crossing so that the section can be isolated for tests or repair. The valves shall be easily accessible and not subject to flooding.

   C. A permanent water sampling station shall be located at each side of the water crossing in an easily accessible area not subject to flooding. The permanent water sampling station shall be as shown in the HRPDC Regional Construction Standards Water Sampling Station Detail No. WD_13.

3. Highway and Railroad Crossings

   Where required, crossing under highways shall be installed in accordance with the requirements of PFM Volume I and Volume II. Crossings of railroads shall be installed in accordance with the requirements of this PFM, the AREMA and the Railroad Company. Encased crossings shall be accomplished prior to the construction of adjacent sections of the project.

4.17 VALVES AND HYDRANTS

1. General

   Valves and hydrants shall have the interiors cleaned of all foreign matter before installation. Stuffing boxes shall be tightened and the hydrants or valves shall be inspected in opened and closed positions to see that all parts are in working condition.

2. Valves and Valve Boxes

   A. All valves shall be provided with valve boxes. Extension stems for buried valves shall not be installed. Valves and valve boxes shall be set plumb with the valve boxes centered directly over the valve operators. After being correctly positioned, earth fill shall be carefully tamped around the valve box to a distance of at least four (4) feet on all sides of the box or to the undisturbed trench face if less than four (4) feet. Before installing any valve, care shall be taken to see that all foreign material is removed from the interior of the barrel and the valve operated to see that all parts are in working condition.

   B. All frames shall be securely anchored to the related structures and shall be installed so that the cover shall be exposed and flush with the street surface. Should the utility system be accepted by the Department, prior to acceptance of the public streets, the Contractor shall remain responsible for the maintenance and integrity of the at-grade structures located within the roadway until Department acceptance of the roadway.

   C. No valves shall be located under a concrete gutter or structure or in a ditch.

   D. Vaults for valves, meters, or blow-offs shall not be connected to any storm drain or sanitary sewer.

3. Hydrants

   A. Hydrants shall be installed at the spacing and location specified in Chapter 3 of this PFM.

   B. Each hydrant shall be preceded with a gate valve with valve box. Hydrants shall be set with the bury line flush with the finish grade.

   C. The use of hydrant extensions is not allowed unless approved by the Department. The pumper connection shall face the street. The connecting pipe will have the same depth of cover as the distributing pipe. The backfill around hydrants shall be thoroughly compacted to the grade line.

4.18 WATER DISTRIBUTION SYSTEM

1. This Specification section shall be used to establish the minimum requirements for water distribution systems in the City of Suffolk.

2. Construction of water systems shall be in strict accordance with the VDH Waterworks Regulations (WR), latest edition, and the City of Suffolk Public Facilities Manual Volumes I & II (PFM).

3. Comply with all rules and regulations of Federal, State, and Local authorities having jurisdiction over the design, construction, and operation of potable water systems.

4. All pipe, fittings and appurtenances shall be in accordance with the PFM. No deviation from the PFM shall be allowed, unless specifically authorized by the Department.

5. Water system elements and related facilities for all proposed developments shall be approved on the basis of their functional integration with the City's total public water system.

6. Obtain all applicable permits for construction of proposed water facilities.

7. The Department shall have jurisdiction over the design and construction of water mains and service lines within the public right-of-way or easements.

8. If any deviation is contemplated in location, alignment, or grade of any water line, appurtenance, or accessory from that shown on the plans approved by the Department, details of the proposed deviation shall be submitted on the Utility Field Change Request Form (Appendix B) to the Department for review and approval before the changes are constructed.

4.19 SANITARY SEWER SYSTEM

1. This Specification section shall be used to establish the minimum requirements for sanitary sewer systems constructed in the City of Suffolk. It shall be used for private systems as well as for systems that will be turned over to the Department.

2. All installations shall be in strict accordance with the Virginia Department of Environmental Quality Sewage Collection and Treatment Regulations (SCAT), the City of Suffolk Public Facilities Manual Volumes I & II (PFM), and the Consent Decree, Regional Technical Standards, and associated documents.

3. All pipe, fittings and appurtenances shall be in accordance with this PFM. No deviation from the PFM shall be allowed, unless specifically authorized by the Department.

4. Sanitary sewer system elements and related facilities for all proposed developments shall be approved on the basis of their functional integration with the City's total public sanitary sewer system.

5. Obtain all applicable permits for construction of proposed facilities.

6. The Department shall have jurisdiction over the design and construction of sanitary sewers and service laterals within the public right-of-way.

7. The building service lateral (approximately five (5) feet outside of the structure's foundation) to the interface with the public system (typically a cleanout or manhole) shall be constructed and tested in accordance with the PFM. Upon approval the building service lateral remains private and not part of the City sanitary sewer system.

8. If any deviation is contemplated in location, alignment, or grade of any sewer, masonry structure, or accessory from that shown on the plans approved by the Department, details of the proposed deviation shall be submitted on the Utility Field Change Request Form (Appendix B) to the Department for review and approval before the changes are constructed.

9. Gravity Sewer:

   The minimum constructed slope for any gravity sewer pipe shall be in accordance with the following table:

TABLE 4.19.9
MINIMUM CONSTRUCTED GRAVITY SEWER GRADES

Sewer Size (Inches)	**Minimum Constructed Slope in Feet per 100 Feet**	
	DI (Manning's n=0.013)	**PVC (Manning's n=0.011)**
8	0.400	0.240
10	0.280	0.180
12	0.220	0.140
16	0.140	0.100
18	0.120	0.090
24	0.080	0.060
30	0.058	0.050

A. The maximum allowable pipe sag shall be at the Department's discretion based on severity, extent and problem potential. Pipelines rejected because of pipe sags

shall be removed, replaced, re-tested and re-inspected at no expense to the Department.

B. Gravity Sewer Installation Tolerance Verification

1. See the Sewer Slopes Check Form in Appendix B to this PFM. The information shall be provided by a licensed surveyor for each gravity sewer reach (manhole to manhole) once installed and prior to initiation of construction of a subsequent gravity sewer reach.

2. Facilities that fail to achieve the slope requirements of Table 4.19.9 – Minimum Constructed Gravity Sewer Grades above shall be rejected by the Department and replaced at no expense to the Department. Facilities removed shall be replaced in kind with new material, unless otherwise approved by the Department.

C. Manholes

The constructed slope through any manhole shall not result in a reversed grade.

10. Force Mains

A. Force mains shall be constructed with a continuous positive or negative slope with designated high and low points.

B. Air release assemblies shall be installed at all high points as indicated in PFM details.

C. Where field conditions dictate, additional air release assemblies shall be installed as directed by the Department.

D. Wherever it is necessary to deflect pipe from a straight line either in the vertical or horizontal plane to avoid obstructions or to plumb stems, or where long-radius curves are permitted, the amount of deflection allowed shall not exceed fifty percent (50%) of that required for satisfactory joining of the pipes, as specified by the AWWA and the manufacturer's recommendations. Pipe shall be installed as described above in a straight line, and then deflected as necessary. If the specified or required alignment requires deflections exceeding those recommended, the Contractor shall provide bends approved by the Department.

11. Manholes

A. All manhole frames and covers shall be set to finished grade, in accordance with the approved plans.

B. When used, bricks shall be wetted shortly before laying. They shall be laid in full mortar bed and shoved in place so that joints are completely filled. Joints shall be three-eighths (3/8) inch thick. Mortar for brick work shall consist of one (1) part Portland cement and two (2) parts clean, dry sand with an admixture of twenty (20) pounds of hydrated lime for each bag of cement. Bricks should only be used where approved /directed by the Department.

C. Base slabs shall be placed on a minimum of six (6) inches of stone.

D. Invert channels shall be constructed in all manholes. Invert channels shall be smooth and semicircular and shall conform to the inside of the adjacent sewer section. Changes in channel size shall be gradual. The floor of the manhole outside the invert elevation shall be smooth and shall slope toward the channel at one (1) to two (2) inches per foot.

E. Manholes that receive a force main shall do so with the force main pipe centerline horizontal with an invert elevation, which will ensure a smooth flow transition to the gravity section. In no case shall the force main enter the manhole more than one foot above the flow line. See the PFM details.

F. All frames shall be securely anchored to the related structures and shall be installed so that the cover shall be exposed and flush with the street surface. Should the sewer system be accepted by the Department, prior to acceptance of the public streets, the Contractor shall remain responsible for the maintenance and integrity of the at-grade structures located within the roadway until City acceptance of the roadway.

G. The frame and cover of manholes or cleanouts located in sodded or other off-street areas shall be so installed that the covers shall be exposed and either flush or above the final grade, as shown on the approved plans, in the PFM details, or as otherwise directed by the Department.

H. A drop pipe shall be provided for a sewer entering a manhole at an elevation of twenty-four (24) inches or more above the manhole invert elevation or as may otherwise be required to conform to the use of standard fittings in the dropping construction. Where the difference in elevation between the incoming sewer and the manhole invert elevation is less than twenty-four (24) inches, the invert shall be filleted to prevent solids deposition, as shown in the PFM details.

I. Protective coating shall be applied where called for on the plans and in the PFM.

4.20 FIELD TESTS

1. Pressure Pipe Systems

   A. During the course of the work, all reasonable precautions shall be taken to protect the pipe interiors, fittings and valves against contamination.

   B. The Contractor shall notify the Department at least forty-eight (48) hours prior to the commencement of filling, soaking and flushing. For water systems, the pipe shall be flushed prior to disinfection with a sufficient flow to produce a flushing velocity of at least 3.0 feet per second. Potable water shall be flushed through the system until no traces of foreign matter are visible. This water shall be discharged or wasted only at points specifically designated by the Department.

   C. The Contractor shall notify the Department at least forty-eight (48) hours prior to the commencement of pressure testing. Tests shall be made on all sections of pipe throughout the entire project and shall be conducted only in the presence of the Department. Tests shall be made after the service installations (where applicable) have been installed. Tests shall be made between adjacent valves and inclusive of service installations (where applicable).

   D. Care shall be taken to ensure that the entire test run of pipe is securely braced and blocked against thrust when pressure is applied. All restraint shall be installed and complete. All pipes shall be firmly supported and weighted down by partial backfill soil on top.

   E. All water for testing purposes shall be provided by the Department. Prior to testing, the pipe shall be filled slowly and carefully (with water from a location designated by the Department) with all air expelled from hydrants, high points and service locations.

   F. Under normal atmospheric pressure the pipe shall be allowed to soak for a minimum period of twenty-four (24) hours. All entrapped air remaining at this time shall be expelled. The Contractor shall provide all the apparatus or other accessories necessary to conduct the tests.

   G. The completed piping shall be subjected to a hydrostatic pressure of 150 psi. This pressure shall be maintained for two (2) hours. Leakage shall not exceed the amount given by the following formula:

$$L = \frac{SD\sqrt{P}}{148{,}000}$$

Where: L = allowable leakage, in gallons per hour

S = length of pipe tested, in feet
D = nominal diameter of pipe, in inches
P = average test pressure during the leakage test, in pounds per square inch

H. Defective material disclosed as a consequence of the tests shall be removed and replaced by sound material. Any joint showing visible leakage shall be made airtight. The test shall be repeated until its results are satisfactory to the Department.

2. Gravity Sewers

A. The Contractor shall give at least forty-eight (48) hours of notice to the Department prior to the commencement of testing. The Contractor shall conduct air tests and deflection tests witnessed by the Department. Tests shall be performed on each completed segment of the sewer. The Contractor shall furnish all labor, equipment, and material for the tests.

B. Air Test

1. The Contractor shall plug the pipe and shall conduct a low pressure air test to determine the acceptability of the completed work. The air testing equipment shall be Air-Lock, as manufactured by Cherne Industrial, Incorporated. All air used shall pass through a single control panel. Individual air hoses shall be used from control panel to pneumatic plugs; from control panel to sealed line for introducing low pressure air; and, from sealed line to control panel for continually monitoring the air pressure rise in the sealed line.

2. Pneumatic plugs shall have a sealing length equal to or greater than the diameter of the pipe tested. The plug shall resist internal test pressures without requiring external bracing or blocking. Plugs shall be tested prior to installation in the pipe run. A joint of pipe shall be sealed at both ends with the plugs at 25 psig. The sealed pipe shall then be pressurized to 5 psig. The plugs shall withstand this pressure without bracing or movement.

3. The tested pneumatic plugs shall be placed in the pipe at each manhole and inflated to 25 psig. Low pressure air shall be introduced into this sealed pipe until a pressure of 4 psig plus the pressure of the groundwater over the pipe is registered. This pressure shall stabilize for two minutes. After stabilization to a minimum pressure of 3.5 psig (plus water pressure, if any), the air hose from the control panel to the air supply shall be disconnected. The portion of sewer tested shall be deemed acceptable if the time required for the pressure to fall one pound is not less than that shown in the following tabulation for the respective pipe sizes where sections of pipe between adjacent manholes up to 400 feet in length are tested. The test shall be conducted in accordance with

the most recent ASTM Standard test method for low pressure air test with the following results:

TABLE 4.20.2.B
MINIMUM TIME FOR 1 PSIG PRESSURE LOSS

Pipe Diameter (Inches)	4	6	8	10	12
Time (Minutes)	2	3	5	6	7½

4. In the event that leakage exceeds the stated allowance in any section tested, the Contractor shall make such repairs to the line, manholes, or appurtenances as may be necessary to comply with the leakage allowance.

5. Laterals connected to manholes shall be tested in accordance with this section.

C. Deflection Test

1. Installation of PVC pipe for main line pipes will require a deflection test to assure that pipe has not exceeded a deflection of five percent (5%) of its base inside diameter. Tests shall be performed no sooner than 30 days after completion of backfill. The Department, at its option, may require a second test within the guarantee period of the project. A nine arm mandrel and proving ring will be sized at five percent (5%) less than the ASTM dimension for the pipe and in accordance with the following table:

TABLE 4.20.2.C
MANDREL SIZES FOR PVC PIPE DEFLECTION TEST

SDR 26 Nom. Dia. (Inches)	**L (Inches)**	**ASTM D3034 (Inches)**	**ASTM D2680 (Inches)**
8	8	7.11	7.40
10	10	8.87	9.31
12	12	10.55	11.22
15	15	12.90	14.09
L = Mandrel Arm Length **D = I.D. of Proving Ring**			

2. The Department supplied mandrel shall be manually pulled by the Contractor, from manhole to manhole, through the entire length of mainline pipe. All

pipe that fails the deflection test shall be removed, replaced, and retested at the expense of the Contractor.

3. The Contractor shall be responsible for any damage to the mandrel up to and including its replacement as directed by the Department.

4. The Contractor shall be responsible for retrieval of the mandrel if it should become lodged in the pipe.

D. CCTV Inspection

1. CCTV inspection shall be performed on each section of the completed gravity sewer in accordance with NASSCO Standards and as required by this PFM.

3. Manholes

A. Precast concrete manholes shall be tested by vacuum.

B. Vacuum testing may be utilized after installation but prior to backfilling around the manhole. Inflatable stoppers and manhole boots shall be secured to prevent movement during the test procedure.

C. After cleaning of the manhole and installation of all stoppers, a vacuum of ten (10) inches of mercury shall be established in the manhole. The manhole shall be considered to have passed the vacuum test if the time required for the vacuum to rise nine (9) inches of mercury for a four (4) foot diameter manhole is not recorded at less than the following elapsed time.

TABLE 4.20.3.C
MANHOLE VACUUM TEST TIME

MANHOLE DEPTH	TIME (SECONDS)
10 ft. or less	60
11 ft. but less than 15 ft.	75
16 ft. but less than 25 ft.	90

D. Where manhole five (5) feet in diameter are tested, fifteen (15) additional seconds shall be added to each elapsed time and where manhole six (6) feet in diameter are tested, thirty (30) additional seconds shall be added to each elapsed time.

E. If the loss of vacuum is in excess of the allowable limits, the Contractor shall make all necessary repairs as approved by the Department and shall repeat the vacuum test until the manhole passes the test. Should the joint mastic be pulled out during the test, the manhole shall be disassembled and the mastic replaced.

F. If the Contractor is unable to satisfactorily anchor the stoppers or boots, or is unable to secure a vacuum test, the water exfiltration test shall be utilized in accordance with the SCAT Regulations.

4. Water System Disinfection:

A. New water pipe shall be disinfected by chlorination in accordance with AWWA C651, latest edition. The disinfection agent of the chlorine solution shall be sodium hypochlorite solution, Grade D, conforming to Federal Specification O-S-602b, dry hypochlorite, or liquid chlorine. Liquid chlorine shall be used only when suitable equipment is available and only under the direct supervision of a properly trained and equipped specialist approved by the Department.

B. The chlorine solution at any point in the pipe shall have a minimum concentration of 25 parts per million (ppm) and shall be applied to the system at a constant, measured rate by pumping in accordance with the continuous feed method, AWWA C651, latest edition. Potable water from an approved source shall be made to flow at a constant, measured rate into the new pipe. The two rates shall be properly proportioned so that the chlorine concentration in the pipe is maintained at a minimum of 25 ppm available chlorine.

C. Chlorine application shall not cease until the entire pipe is completely filled with solution. The chlorinated water shall be retained in the system for at least twenty-four (24) hours, during which time all valves and hydrants shall be operated in order to disinfect the appurtenances. At the end of the twenty-four (24) hour period, the water shall contain not less than ten (10) parts per million of chlorine throughout the entire pipe system disinfected. After the specified retention period, the chlorinated water shall be flushed from the main until the residual chlorine concentration is no higher than that prevailing in the existing system or less than two (2.0) parts per million. Chlorinated water shall be de-chlorinated in accordance with ANSI/AWWA Standard C651, current edition, as it is discharged.

D. After at least sixteen (16) hours following final flushing and before the water main is placed in service, samples of water from several designated points in the system shall be collected by City staff in sterile containers treated with sodium thiosulfate. No hose or fire hydrant shall be used in the collection of samples. Two samples taken twenty-four (24) hours apart at each selected location shall be submitted to the Department laboratory for analysis and the results of these analyses reported to the Department. If this examination indicates the presence of coliform organisms, the entire disinfection process shall be repeated or continued until the examination indicates the absence of such pollution. Standard plate counts may be required on retest. Sample points locations shall not exceed 1,200 feet apart.

E. Pipe taps and fittings used at connections to the existing system shall be thoroughly disinfected before installation. Excavation for such connections shall be kept free from water until the connection is completed, and extreme care shall be exercised to prevent contamination of the pipe and connection fittings. The inside of the existing pipe within three (3) feet of the point of connection shall be disinfected by spraying with a solution containing not less than 200 ppm of chlorine immediately before connection is made. If at any time the water in the existing piping becomes contaminated, this piping shall be disinfected as specified for new piping, back to the nearest gate valve or valves, or beyond those points as necessary to include all contaminated piping.

F. The complete disinfection process and methods followed, especially if materially different from those specified, shall be in accordance with the directives of the Virginia Department of Health, and all methods employed shall meet with its approval. Final approval of the bacterial examination shall be received from the Department prior to placing the new water main into operation.

4.21 START-UP AND DEMONSTRATION

1. Ensure that all work has been satisfactorily completed before start-up of any unit or system. Provide signed copies of applicable PFM Check Lists to the Department.

2. Ensure systems are tested hydraulically, mechanically and electrically. Ensure systems, which require calibration, are fully operational in strict accordance with the project specifications and manufacturer’s instruction manuals.

3. Contractor shall schedule start-up and demonstration with the Department at least fourteen (14) calendar days in advance.

4. Provide all supervision, labor, equipment, vehicles, utilities and any other items required to start-up, operate and demonstrate the facility.

5. Start-up, operate and demonstrate specified performance of each item of equipment to the complete satisfaction of the Department.

6. Start-up and Demonstration for pump stations shall be performed in accordance with the Pump Station Acceptance Procedures located in the Check Lists and Forms section of the Appendix to this PFM.

7. During start-up, with equipment in operation, have manufacturer's representative(s) instruct Department's designated personnel in operation and maintenance of each system in detail.

8. Have manufacturer's representative(s) certify in writing, as to the correctness and completeness of the facility, its installation and the start-up and demonstration.

9. Immediately correct any deficiencies observed and noted during the demonstration period and satisfactorily re-demonstrate the system or systems involved.

10. After successful completion of start-up and demonstration, and correction of all deficiencies, the Contractor will be responsible for the shutdown and protection of the facility until final acceptance of the total project by the Department.

4.22 PROJECT ACCEPTANCE REQUIREMENTS

1. Contractor submits all warrantees and bonds to the Department for acceptance.

2. Contractor submits all property plats, deeds, easement plats and other required ownership documents to the Department for acceptance.

3. Contractor performs all required testing, CCTV and Record Drawings and submits them to the EOR for his review and certification.

4. EOR reviews all required test results, CCTV tapes, survey, and certifies that:

   A. The project (or a portion thereof) has been constructed in accordance with the approved plans and the PFM.

   B. All testing has been performed in accordance with the PFM and that all tests have passed or exceptions thereto so noted.

   C. The project (or a portion thereof) and all required certifications and submittals are ready for Department review and acceptance.

   D. The water and sewer acceptance check lists have been submitted to the Department.

   E. All approved Shop Drawings have been submitted to the Department.

   F. All required properties and easements have been recorded and submitted to the Department.

   G. All operation and maintenance manuals (as required by this PFM and the Project Specifications) have been received, reviewed and approved.

   H. All Record Drawings have been submitted and approved.

   I. The EOR submits a copy of all Start-Up and Demonstration documents to the Department for their review and approval.

5. The Department will review all submitted materials and will either reject or accept the project. The Department will ordinarily complete this review within three (3) weeks, depending on the size of the system submitted and the number of discrepancies discovered. Upon discovery of an incomplete submittal or an unacceptable number of discrepancies, the Department will cease review of the submittal and return it marked "Rejected for Non-Compliance".

4.23 PARTIAL POSSESSION

The Department may elect to assume ownership of portions of a project, if it is advantageous to the City, prior to completion of the entire project. Prior to accepting a portion of any project, the provisions stated herein shall be met for the portion of the project to be accepted.

4.24 TRANSFERRING PROJECT OWNERSHIP TO THE CITY OF SUFFOLK

The City of Suffolk is not under any obligation to accept a private utility project and will not accept ownership of a utility unless the Department determines that acceptance is in the City's best interest and the utility meets the Department's Standards. Until a project has been accepted for ownership by the Department, the Project Owner/Developer shall be responsible for all cost of maintaining and repairing the project.

4.25 RECORD DRAWINGS

The City of Suffolk is developing a GIS database of water and sewer utilities within the City. Accurate As-Built information shall be recorded as the Project progresses in accordance with Appendix E – Record Drawings. No project will be accepted for ownership by the City until the Record Drawings are submitted, reviewed and approved by the Department.

4.26 CONSTRUCTION BONDS RELEASE

Construction bonds will not be released by the Department until Record Drawings, warranties, completed check lists, post-construction CCTV records review by the Department, mandrel testing, pump station testing and all associated Construction work has been accepted by the Department.

END OF SECTION

CHAPTER 5

CROSS CONNECTION CONTROL

2017 RELEASE 1

This page intentionally left blank.

5.0 CROSS CONNECTION CONTROL

5.1 PURPOSE

The purpose of this article is to establish and maintain a cross connection and backflow prevention program as required by the Virginia Department of Health's (VDH) Waterworks Regulations, Article 4. The regulations included in this document cover the City's main water distribution system (PWSID 3800805), and the Whaleyville Community Well System (PWSID: 3800880).

5.2 GENERAL PROHIBITION AGAINST CROSS CONNECTIONS

No person shall interconnect another water system to the City's water system. Any City service to a building or premise which has a direct connection to toxic or non-toxic substances shall be protected by a backflow device.

5.3 DEFINITIONS:

5.3.1 APPROVED

Accepted by the Department as meeting an applicable specification stated or cited in this PFM Volume II, or as suitable for the proposed use.

5.3.2 PRIVATE WATER SUPPLY

Any water supply, on or available, to the premises other than the City's water system.

5.3.3 BACKFLOW

The reversal of flow of water, liquids, gases, or substances from its intended direction as a result of backsiphonage or backpressure.

5.3.4 BACKFLOW DEVICE

A device or means designed to prevent backflow or backsiphonage. Most commonly categorized as air gap, reduced pressure principle device, double check valve assembly, pressure vacuum breaker, atmospheric vacuum breaker, hose bibb vacuum breaker, residential dual check valve and double check valve with intermediate atmospheric vent.

1. Air-Gap

   A physical separation sufficient to prevent backflow between the free-flowing discharge end of the City's water system and any other system. Physically defined as a

distance equal to twice the diameter of the supply side pipe diameter but never less than one (1) inch.

2. Atmospheric Vacuum Breaker

   A non-testable device which prevents backsiphonage by creating an atmospheric vent when there is either a negative pressure or subatmospheric pressure in a water system.

3. Double Check Valve Assembly

   A testable assembly of two (2) independently operating spring-loaded check valves with tightly closing shutoff valves on each side of the check valves, plus properly located test cocks for the testing of each check valve.

4. Hose Bibb Vacuum Breaker

   A non-testable device which is permanently attached to a hose bibb and which acts as an atmospheric vacuum breaker.

5. Pressure Vacuum Breaker

   A testable device containing two independently operated spring-loaded check valves and an independently operated spring-loaded air inlet valve located on the discharge side of the checks. Device includes tightly closing shutoff valves on each side of the check valves and properly located test cocks for the testing of the check valves.

6. Reduced Pressure Backflow Prevention Assembly

   A testable assembly consisting of two (2) independently operating approved check valves with an automatically operating differential relief valve located between the two (2) check valves, tightly closing shutoff valves on each side of the check valves plus properly located test cocks for the testing of the check valves and the relief valve.

7. Residential Dual Check

   A non-testable device of two (2) spring-loaded, independently operating check valves without tightly closing shutoff valves and test cocks. Generally employed immediately downstream of the water meter to act as a containment device.

5.3.5 BACKFLOW DEVICE TESTER

A certified backflow device tester with a current license.

5.3.6 BACKPRESSURE

A pressure, higher than supply pressure, caused by a pump, elevated tank, boiler, air/steam pressure, or any other means, which may cause backflow.

5.3.7 BACKSIPHONAGE

The flow of water or other liquids, mixtures or substances into the City's water system from any source other than its intended source caused by the sudden reduction of pressure in the City's water system.

5.3.8 DEPARTMENT

The Utilities Department of the City of Suffolk, Virginia, represents the City in matters of review, approval and acceptance of public water and sewer facilities.

5.3.9 RESPONSIBLE PARTY

The person in charge, care and control of the property or the tenant or consumer who signed or otherwise authorized the water service agreement applicable to the premises.

5.3.10 CONTAINMENT

To confine potential contamination by installation of a backflow device at the water service connection.

5.4 DESIGN

5.4.1 GENERAL

The private water system shall be designed, installed and maintained in such a manner as to prevent contamination from nonpotable liquids, solids, gases, harmful or benign, from being introduced back into the City's water system. This shall be accomplished by the use of a cross connection control device(s) or method in locations that are deemed by the City to be potential cross connections. In the case that a hazard classification cannot be made at the time of design, provisions shall be made to install a backflow device, at an approved location in the future.

Appropriate backflow devices shall be determined according to the degree of hazard. In facilities where water usage or piping is complex or the hazard warrants, the Department

may require a backflow device immediately downstream from the service connection or at the point approved by the City.

If continuous service is required, two backflow devices of the same type shall be installed in parallel.

All site plans submitted to the City for new or existing facilities to be remodeled shall be reviewed and approved by the Department.

Examples of applications requiring cross connection control and the required backflow devices are included in the Suffolk City Code and the Virginia Administrative Code, 12VAC5-590-610 and 620. Further examples may be found in the American Water Works Association Manual of Water Supply Practices M-14 – Backflow Prevention and Cross-Connection Control.

5.4.2 STANDARDS FOR BACKFLOW DEVICES

Devices for the prevention of backflow shall be tested and certified to meet the standards of the following agencies:

1. American Society of Sanitary Engineers (ASSE)

2. American Water Works Association (AWWA)

3. American National Standards Institute (ANSI)

4. University of Southern California Foundation for Cross-Connection Control (USC)

5. Commonwealth of Virginia Office of Drinking Water

6. City of Suffolk Department of Public Utilities

5.4.3 DETERMINATION OF DEGREE OF HAZARD

Non-residential premise with one (1) or more of the following conditions shall be rated at the corresponding degree of hazard and shall have installed the applicable backflow device:

1. High Hazard

   A. Contaminant is toxic, poisonous, noxious or unhealthy.

   B. A health hazard would exist.

   C. A high probability exists of a backflow occurrence either by backpressure or by

backsiphonage.

D. Contaminant would disrupt the service of water for drinking or domestic use.

Examples of high hazards include: sewage, used water, nonpotable water, private water systems, and toxic or hazardous chemicals, etc.

2. Low Hazard

A. Contaminant would only degrade the quality of the water aesthetically.

B. A health hazard would not exist.

C. A low probability exists of backflow from backsiphonage.

5.4.4 IRRIGATION SYSTEMS

A testable backflow device shall be installed on all irrigation systems connected to the City's water system. All non-residential devices shall be tested annually.

If chemicals are injected, an RPZ must be installed.

Pop up sprinkler heads and other ground-level sprinklers present a health hazard and that type of system will require installation of an RPZ.

Pressure vacuum breakers must be installed so that the device is at least 12" above the highest point in the system after the vacuum breaker.

The air inlet port should not be blocked since the assembly depends on the inflow of air to work properly.

System must not be subject to flooding.

Device must be installed in the direction of flow.

Device must be located on the consumer's property.

Device must be easily accessible for testing and maintenance.

Device must meet ASSE requirements.

A licensed backflow tester holding a current backflow-testing license must perform all tests.

Devices installed outside should be protected from the elements with a locked "hot box".

5.4.5 FIRE SERVICE

All new fire service connections shall require a backflow device. In addition, where a building or premise changes use or is significantly altered such that a City approval is required, the fire service connection, if present, shall be upgraded to include a backflow device.

Fire systems that have a booster pump installed, shall be designed to avoid lowering the pressure at the connection to the City's water system to less than twenty (20) psi. A low pressure cutoff shall be installed on the suction side of the booster pumps accordingly.

Unless otherwise approved by the City, the domestic and fire service lines shall be separate connections to the City's water system.

5.4.6 CONSTRUCTION METER AND BACKFLOW DEVICE

Before using a hydrant, a backflow device with meter between the hydrant and the hose shall be installed in all cases except for firefighting purposes. Contractors shall contact the City of Suffolk Department of Public Utilities Customer Service Department to pay the associated deposit fee and arrange for installation of the device. City personnel will install the device at a location approved by the Department. The device shall be returned annually on the date of receipt or if the device requires maintenance. The device shall be removed and promptly returned to the Department upon conclusion of water use.

5.4.7 BACKFLOW DEVICE SELECTION

The type of backflow device selected shall be based on the degree of hazard and the operating conditions as directed by the Department. The following table shall be used as a guide for selection of the appropriate device.

Table 5.4.7 BACKFLOW DEVICE TYPES

DEVICE TYPE	DEGREE OF HAZARD	TYPE OF BACKFLOW	OPERATING CONDITIONS
Air Gap	High or Low	Backpressure Backsiphonage	NA
Reduced Pressure Zone (RPZ) Backflow Prevention Assembly	High or Low	Backpressure Backsiphonage	Continuous Pressure
Double Check Valve Assembly (DCVA)	Low	Backpressure Backsiphonage	Continuous Pressure

DEVICE TYPE	DEGREE OF HAZARD	TYPE OF BACKFLOW	OPERATING CONDITIONS
Pressure Vacuum Breaker (PVB)	High or Low	Backsiphonage	Continuous Pressure
Atmospheric Vacuum Breaker (AVB)	Low	Backsiphonage	Not subjected to more than 12 hours of pressure in a 24-hour period. No shutoff valve downstream of device.
Hose Connection Vacuum Breaker	High or Low	Backsiphonage	Not subjected to more than 12 hours of pressure in a 24-hour period. No shutoff valve downstream of device.

Certain facilities may require containment with an RPZ or DCVA device located after the meter and before any take-offs on the service line. The Department reserves the right of review and determination of such facilities.

5.5 INSTALLATION

During construction, prior to occupancy, and annually thereafter the Department shall perform an on-site inspection to ensure that the installation is in accordance with the approved plans, the backflow device is installed according to the manufacturer's recommendations, and meets the requirements of the PFM Volume II.

5.5.1 LOCATION AND INSTALLATION REQUIREMENTS

1. Backflow devices shall have easy access, preferably in the same room with the fixture they serve. In all cases, installation shall be in accordance with the manufacturer's recommendations and the PFM Volume II.

2. Atmospheric vacuum breakers shall be installed with the critical level at least six (6) inches above the flood-level rim of the fixture they serve and on the discharge side of the last control valve to the fixture.

3. Pressure Vacuum Breaker:

   A. If chemicals are injected, an RPZ is required.

   B. Pressure vacuum breakers must be installed so that the device is a minimum of twelve (12) inches above all downstream piping and use.

C. Do not block the air inlet port; the assembly depends on the inflow of air to work properly.

D. Device must not be subject to flooding.

E. Device must be installed in the direction of flow.

F. Device must be located on the consumer's property.

G. Device must be easily accessible for testing and maintenance.

H. Device must meet ASSE requirements.

I. All testable devices in the City of Suffolk must be tested upon installation, after any required maintenance, and on an annual basis.

J. A licensed backflow tester holding a current backflow-testing license must perform all tests.

K. Devices installed outside must be protected from freezing during the winter with a "hot box".

L. The irrigation system may be drained and the device removed during the winter to avoid the purchase of a hot box.

4. Reduced Pressure Zone Assembly (RPZ) and Double Check Valve Assembly (DCVA):

A. An RPZ device must be installed with a minimum of twelve (12) inches of clearance from the relief port to the ground or floor. The clearance shall not exceed thirty (30) inches.

B. Device must be installed before any take-offs.

C. Device must be installed above ground.

D. Device must be located on the consumer's property.

E. Device must be easily accessible for testing and maintenance.

F. Device must meet ASSE requirements.

G. Devices installed outside must be protected from the elements with a locked "hot box".

H. RPZs for irrigation systems may be removed during the winter months to avoid the purchase of a "hot box".

I. RPZs shall be installed above ground in a flood-free zone.

5.5.2 TESTING REQUIREMENTS

1. All testable devices in the City of Suffolk must be tested upon installation, after any required maintenance, and on an annual basis. The original of all test results must be submitted to:

   Department of Public Utilities
   Attention: Cross Connection Control
   P.O. Box 1858
   Suffolk, VA 23439

2. Certification Of Backflow Device Testers

   Plumbers, mechanical contractors, maintenance personnel, employees of facility owners or owners of backflow devices may become certified by an approved Virginia Cross Connection Control School. Certification to test and repair backflow devices shall include a written examination and practical performance examination.

3. A license to test backflow devices shall be renewed annually or as required by the licensing agency on or before the expiration date, by an approved Virginia Cross Connection Control School.

4. A license to test backflow devices shall not be recognized if the backflow device tester has been found incompetent or guilty of a willful breach of the rules, regulations or requirements of this PFM Volume II.

5. Testing of devices shall be performed annually, as a minimum, or after any maintenance or relocation has been performed. The responsibility and all costs associated with testing and repair or maintenance of the device shall be that of the responsible party.

6. Certificate of testing shall be provided to the Department upon completion of testing.

5.6 MAINTENANCE

5.6.1 INSPECTIONS BY THE DEPARTMENT

1. The Department will inspect the premises during reasonable working hours and under such circumstances as to minimize the inconvenience to the responsible party. Should

the responsible party refuse to allow the Department access to the premises for the purpose of conducting an inspection, or should the Department not be able to contact the responsible party for this purpose, the Department reserves the right to terminate service. The Department shall give 14 days notice to the affected premises of the intention to terminate the water service, except in emergency cases. The provisions of this section shall apply to all initial inspections and to such follow-up inspections as may be necessary.

2. In emergency circumstances, where the Department has reasonable cause to believe that there is an imminent risk to the City's water system from the subject premise, the Director shall determine whether to terminate the water service to the subject premise. Should the water service be terminated, it shall not be restored until the violation is corrected to the satisfaction of the Department.

3. The City will inspect the premises in the city as necessary to prevent the risk of contamination of the City's water system. The City shall notify, or cause to be notified, in writing the responsible party of any premises to correct within a reasonable time, set by the Department, in violation of this program.

5.6.2 NOTICE OF VIOLATION – FAILURE TO CORRECT VIOLATION

1. The Department shall notify the responsible party of a premises of all violations found and shall advise of all pertinent information concerning the violations. The Department shall set a reasonable time for the violations to be corrected.

2. If, in the opinion of the Department, an immediate threat to public health may exist, or if a backflow prevention violation remains uncorrected, the Department may immediately terminate water service at it's sole discretion.

END OF SECTION

APPENDIX A

ABBREVIATIONS

This page intentionally left blank.

APPENDIX A

Abbreviations

AASHTO	American Association of State Highway & Transportation Officials
ACI	American Concrete Institute
ANSI	American National Standards Institute
AREMA	American Railway Engineering and Maintenance of Easement Association
ASSE	American Society of Sanitary Engineers
ASME	American Society of Mechanical Engineers
ASTM	American Society of Testing Materials
AWWA	American Water Works Association
BMP	Best Management Practices
BOCA	Building Officials Conference of America
CCTV	Closed Circuit Television
CIPP	Cured in Place Pipe
DEQ	Department of Environmental Quality
DFU	Drainage Fixture Unit
DIP	Ductile Iron Pipe
DIPRA	Ductile Iron Pipe Research Association
DPU	Department of Public Utilities
DPW	Department of Public Works
EQD	Electrical Quick Disconnect
FAT	Factory Acceptance Test
FOG	Fats Oils and Grease
FSE	Food Services Establishment
Gal	Gallon
GCD	Grease Control Devices
GPD	Gallons Per Day
HARN	High Accuracy Reference Network
HDD	Horizontal Directional Drilling
HDPE	High Density Polyethylene
HMI	Human Machine Interface
HRSD	Hampton Roads Sanitation District
ID	Inside Diameter
IFC	International Fire Code
IPS	Internal Pipe Size
MGS	Magnetic Guidance System
MH	Manhole
MJ	Mechanical Joint
NACE	National Association of Corrosion Engineers
NAD	Network Attached Device

NAICS	North American Industry Classification System
NAVD	North Averican Vertical Datum
NEMA	National Emergency Management Association
NFPA	National Fire Protection Agency
NSF	National Science Foundation
NPSH	Net Positive Suction Head
NSF	National Sanitation Foundation
O & M	Operation and Maintenance
OD	Outside Diameter
OSHA	Occupational Safety and Health Administration
PDI	Professional Development Institute
PE	Polyethylene Pipe
PFM	Public Facilities Manual
PSI	Pounds Per Square Inch
PVC	Polyvinylchloride
RMA	Resource Management Areas
RPA	Resource Protection Areas
RPM	Rotations Per Minute
RTS	Regional Technical Standards
SAT	Site Acceptance Test
SCADA	Supervisory Control and Data Acquisition
SCAT	Sewage Collection and Treatment
SDR	Standard Dimension Ratio
SF	Square Feet
SR	Sewer Regulations
SSO	Sanitary Sewer Overflow
SSPC	Society of Protective Coatings
TDH	Total Dynamic Head
UDO	Unified Development Ordinance
USBC	Uniform Statewide Building Code
V	Velocity of Flow
VDEQ	Virginia Department of Environmental Quality
VDH	Virginia Department of Health
VDOT	Virginia Department of Transportation
VESC	Virginia Erosion and Sediment Control
WR	Waterworks Regulations

APPENDIX B

CHECK LISTS AND FORMS

This page intentionally left blank.

APPENDIX B

Table of Contents

B-1 Project Submittal Check List

B-2 Plan Review Check List

B-3 Water Distribution System Acceptance Check List

B-4 Pressure Test Form

B-5 Sewer Slopes Check Form

B-6 Sewer System Test Form

B-7 Sanitary Sewer System Acceptance Check List

B-8 Factory Acceptance Test (FAT) Check List for Sanitary Pump Stations

B-9A Pre-Site Acceptance Test (Pre-SAT) Check List for Sanitary Pump Stations

B-9B Site Acceptance Test (SAT) Check List for Sanitary Pump Stations

B-10 Start-Up Check List for Sanitary Pump Stations

B-11 Stand-By Power Generator Start-Up Check List

B-12 Pump Station Acceptance Procedure

B-13 Utility Field Change Request Form

This page intentionally left blank.

PROJECT SUBMITTAL CHECK LIST

Project Name: _____

Project Address/Tax Map #: _____

Developer: _____

Engineer of Record: _____

Phone: _____ Fax: _____ E-mail: _____

All of the items indicated on this check list are accurately reflected in the attached calculations, Plans and Specifications.

Engineer of Record Signature:_____ Date: _____

Submittal # (Circle): 1 2 3 4 5

ACCEPTED By DPU: YES NO

****

This Check List shall be completed and submitted by the Development Plan Preparer and shall accompany all submittals to the City of Suffolk Department of Planning. Any item response indicating "NO" shall be explained in writing and attached to this Check List. Failure to fill out this Check List in its entirety may result in the submittal being rejected. Acceptance of this submittal is for review only and does not constitute a submittal acceptance.

****

I. Design Calculations

		Yes	No	N/A
1.	Plan Review Fees have been paid. Receipt attached.			
2.	A preliminary design conference has been held with DPU.			
3.	An engineering report is provided and covers all phases and aspects of the project in accordance with Chapter 3 – Design, of this PFM.			
4.	Applicable calculations are provided (signed and sealed by Engineer of Record).			
5.	Water: Average day, maximum day, and fire flows, headloss calculations, hydraulic modeling and water service line and meter sizing calculations.			
6.	Sanitary: Average and peak daily flows, calculated pipe sizes, and flow calculations.			

		Yes	No	N/A
7.	Pump Stations: Interim and full build-out, pump and system curve, pump cycle time, hydraulic modeling of pumps, wetwell capacity, NPSH calculations, generator sizing calcs (as applicable) overflow calculations, buoyancy, design loads (soil borings included), structural calculations and force main velocities.			

II. Design Drawings

1.	Project Name, Developer's, Engineer of Record's and Surveyor's (if applicable) name and contact information.			
2.	Vicinity map with north arrow.			
3.	Plans signed, sealed, and dated by a VA Registered engineer.			
4.	Plans clearly depict all existing and proposed features including existing contours and proposed contours with major contours labeled and source of topographic survey.			
5.	Easements shown and labeled with callouts and dimensions.			
6.	North Arrow and scale (plan and profile) provided on all applicable sheets with baseline stationing for cross referencing.			
7.	Standard general notes for water distribution and sanitary sewer systems.			
8.	Vertical and horizontal datum shown and benchmarks established if necessary.			
9.	Provide call-outs: Individual or tabular for all features referencing details.			
10.	Profiles provided for water and sanitary along with stub-outs for future connections showing minimum cover.			
11.	Clearly labeled pipe sizes, types, restrained lengths (indicated in profiles), inverts, slopes, and any other applicable design information.			
12.	Proper horizontal and vertical separation from other utilities.			
13.	Overall plan which shows water and/or sewer layout including existing and proposed utilities, buildings, vaults, features, streets, property lines, pins, easements, property parcels labeled with Tax Map # and Owner, methods of construction, wetlands or resource protection areas, etc. with a sheet index. Project phasing shall be indicated if applicable.			
14.	Standard details shown including trenching, bedding, backfill, compaction, erosion control, etc.			
15.	Backflow prevention has been addressed for fire, irrigation and domestic services.			
16.	Revision Block provided on each plan sheet and is up-to-date.			

PLAN REVIEW CHECK LIST

Project Name: _____

Planning Number: _____ **DPU File Number:** _____

Project Location: _____

Tax Map/Parcel: _____

Planning Staff Contact: _____ **Project Type:** _____

Developer: _____

Engineer of Record: _____

Phone: _____ Fax: _____ E-mail: _____

DPU Plan Reviewer Name:_____ Review Date: _____

DPU File #:_____ Submittal # (Circle): 1 2 3 4 5

****

The intent of this Check List is to aid in providing complete project documents that are in accordance with the requirements of the City of Suffolk Department of Public Utilities (Department) Public Facilities Manual (PFM), Volume 2. Use of this Check List does not relieve the Engineer of Record of the responsibility for conformance with any Local, State or Federal requirements. The Department's review of the design calculations and construction plans is strictly for conformance and general arrangement. By its approval, the Department does not certify as to the correctness or completeness of said plans and specifications. The Department takes no professional responsibility or liability for the calculations or plans. It is the responsibility of the Engineer of Record, <u>not the Department</u>, to ensure the calculations and plans comply with all governing regulations, standards and specifications. Contractor shall be responsible for all associated Engineering review costs.

****

I. ENGINEERING REPORT / CALCULATIONS

		Yes	No	N/A	Notes/Comments
	PRELIMINARY ENGINEERING REPORT				
1.	Calculations and plans are sealed and signed by a Virginia Registered Professional Engineer.	☐	☐	☐	
2.	Provide a timeline indicating approximate build-out of the Service Area.	☐	☐	☐	
3.	Provide a service area map and include off-site service areas. Map must be to scale.	☐	☐	☐	
4.	Provide a written narrative that explains the engineering features of the Project. Include a Table of Contents and number all pages.	☐	☐	☐	
5.	Include a table of wastewater flows by Service Area segment to include preliminary, interim and final flows (as applicable). Include full build-out of Service Area.	☐	☐	☐	
6.	Provide thrust restraint calculations for all force main and water mains.	☐	☐	☐	
7.	Provide wetland and other environmental impacts in report.	☐	☐	☐	
8.	Include Piping and other requirements as stated in water and sewer sections.	☐	☐	☐	
9.	Provide Plat(s) to DPU for review and approval prior to recordation.	☐	☐	☐	
	WATER SYSTEM				
1.	Include Average Day, Maximum Day, Maximum Hour and Fire Flows for all areas and sub-areas of the proposed service area.	☐	☐	☐	
2.	Provide complete hydraulic modeling information with all design assumptions clearly indicated. Provide a legible hydraulic node map identifying all nodes and pipe segments corresponding with the water model demands and calculations.	☐	☐	☐	
3.	Include headloss calculations using C=120 for cement lined ductile iron pipe and C=130 for PVC and HDPE new pipe.	☐	☐	☐	
4.	Modeling results show a minimum of 20 psi and a maximum of 80 psi at design flow within the service area.	☐	☐	☐	
5.	Verify Fire Flow site calculations have been provided in accordance with the current City of Suffolk	☐	☐	☐	

		Yes	No	N/A	Notes/Comments
	requirements. Both Required Fire Flow and Available Fire Flow are clearly stated and discussed. Verify that Code references are provided and hydrant spacing is in accordance with NFPA and the City of Suffolk Fire Department.				
6.	A City of Suffolk hydraulic model run (recent-less than 1-year old) has been performed and a copy is included.	☐	☐	☐	
7.	Provide water service sizes and meter sizes with backup calculations in accordance with AWWA Manual 22.	☐	☐	☐	
8.	A table is included showing the following information for each pipe: size, material, project pressure, flow and velocity. (Include C Factor) Identify limits for design velocities in the pipe segments.	☐	☐	☐	
	GRAVITY SEWER/FORCE MAIN SYSTEM				
1.	Average Daily Flow(s) and Peak Flow(s) are presented in tabulated form.	☐	☐	☐	
2.	Peak flow and average flow are calculated in accordance with the Consent Decree/RTS including initial and build-out conditions and any offsite areas presented in tabulated form.	☐	☐	☐	
3.	Include a table reflecting all pipe slopes, manhole and cleanout rim and inverts. Table identifies connections of pipes to manholes and describes where the manholes can be located on the plans.	☐	☐	☐	
4.	Identify in report where DI pipe will be required. (i.e. less than 3’ of cover or greater than 12’ in depth).	☐	☐	☐	
5.	Where gravity sewer lines are located under large storm drain structures (>18”) with less than 12” vertical clearance, the gravity sewer line must be replaced with ductile iron pipe from manhole to manhole or the entire lateral length and special bedding material is required. Where large storm drains are placed over existing PVC gravity sewer lines with less than 12” clearance, a storm drain bridge must be installed to prevent future settlement. Identify these areas in report.	☐	☐	☐	
6.	Pipe scouring velocities should be maintained between 2-8 ft/sec during average daily and peak flows. Provide calculations to verify velocities can be achieved with selected pipe sizes.	☐	☐	☐	

		Yes	No	N/A	Notes/Comments
7.	Provide calculations showing Commercial, Industrial or other flow figures with source references (VDEQ, Consent Decree/RTS, etc.).	☐	☐	☐	
8.	Include flow calculations using "n" = 0.013 for cement lined ductile iron pipe and "n" = 0.011 for PVC and HDPE pipe.	☐	☐	☐	
9.	Calculations indicate pipes sized so that maximum depth of flow in any pipe, at Ultimate Flow, does not exceed 2/3 full.	☐	☐	☐	
10.	Minimum pipe slopes are in accordance with PFM.	☐	☐	☐	
11.	Minimum fall across Manholes is 0.1 feet. If this requirement is not met, a letter requesting an exemption, including reasons, is included.	☐	☐	☐	
12.	Where multiple dwellings connect to one common City lateral, provide calculations to support that the lateral has adequate capacity to handle the peak demand flows from all connected units.	☐	☐	☐	
13.	Drop connections to manholes should be avoided. If a drop connection is required, a letter requesting exemption, including reasons, is included.	☐	☐	☐	
14.	Where manholes are located in a depressed drainage area, waterproof manholes with inserts must be installed. Identify these areas in report and provide alternatives to prevent rainwater inflow.	☐	☐	☐	
	Sanitary Pump Station				
1.	Identify that Project flows discharge by gravity sewer into a new pump station to be constructed with this Project or that Project flows discharge by gravity into an existing pump station. Existing pump station and force main capacity analysis is included.	☐	☐	☐	
2.	Identify that Wet well/dry well pump station with brick building, emergency pump connection, emergency generator and all-weather driveway will be provided.	☐	☐	☐	
3.	Submersible pump station with brick building, emergency pump connection, emergency generator and all-weather driveway will be provided.	☐	☐	☐	
4.	Minimum lot size conforms to PFM, unless otherwise approved by the DPU.	☐	☐	☐	

		Yes	No	N/A	Notes/Comments
5.	Verify that Lot is adjacent to a City maintained right-of-way or an Ingress/Egress easement has been provided.	☐	☐	☐	
6.	Verify that Pump station has been located to take advantage of topography so as to maximize service area of proposed system (serves a minimum 3,000 foot radius.	☐	☐	☐	
8.	Provide Soil borings Geotechnical Report with foundation recommendations.	☐	☐	☐	
9.	Provide design loads used in calculations (Dead and live loads for floor and roof, snow, wind, stairs, railings, crane).	☐	☐	☐	
10.	Provide Buoyancy calculations for wet well and vaults.	☐	☐	☐	
11.	If Pump station discharges into an existing gravity sewer system, provide existing gravity sewer system capacity calculations.	☐	☐	☐	
12.	Provide HRSD Flow Acceptance Certificate Request with submittal.	☐	☐	☐	
13.	Calculate Initial and Build-Out flows for Service Area based on the Consent Decree/RTS.	☐	☐	☐	
14.	Provide Pump Cycle Time (generally 15 minutes) calculations.	☐	☐	☐	
15.	Operating range set at 1.0 foot minimum.	☐	☐	☐	
16.	Low Water Level set to Pump Manufacturer's minimum recommendation.	☐	☐	☐	
17.	High Water Level set in accordance with standard Pump Station Control Set Levels on Prototype Drawings.	☐	☐	☐	
18.	High Water Alarm elevation set at minimum of 6-inches above Lag Pump On elevation.	☐	☐	☐	
19.	Provide system storage calculations for minimum holding time prior to overflow.	☐	☐	☐	
20.	Total Dynamic Head (TDH) calculations are provided in tabular format for max and min conditions for each of the specified present and future conditions, including any potential future impeller modifications. Calculations also include: Headloss calculations using C=120 for new cement lines ductile iron pipe and C=130 for PVC and HDPE new pipe, static head calculations, station discharge pipe head calculations, station suction pipe head calculations including minor and entrance	☐	☐	☐	

		Yes	No	N/A	Notes/Comments
	losses, and designed to HRSD entrance head requirements including Regional System head, peak daily head, zero HRSD pressure head (if discharging into HRSD force main)				
21.	Provide Force Main sizing calculations include velocity figures for max and min pumping. Minimum velocity is 2 feet per second and maximum is 8 feet per second.	☐	☐	☐	
22.	Pumps must be able to pass 3-inch sphere.	☐	☐	☐	
23.	Verify that Motors have sufficient horsepower to meet the maximum power requirements and are non-overloading throughout the entire pump impeller curve for any size impeller specified for present and future conditions. Provide calculations for impeller change out during project phasing for constant speed pumps.	☐	☐	☐	
24.	Provide $NPSH_R$ (Net Positive Suction Head, Required) determined.	☐	☐	☐	
25.	Provide $NPSH_A$ (Net Positive Suction Head, Available) calculated and compared with the $NPSH_R$. (Available must exceed Required by a minimum of 1 foot.)	☐	☐	☐	
26.	If VFD's are specified, then range of speed settings are provided.	☐	☐	☐	
27.	Provide ventilation calculations showing a minimum of 12 complete air changes per hour if continuous or 30 air changes per hour if not continuous.	☐	☐	☐	
28.	Generator sizing calculations are provided. Size for one pump starting (inrush) while one pump and all other station loads are online.	☐	☐	☐	

II. PLANS – GENERAL, DETAILS & NOTES

	GENERAL				
1.	Minimum 10 foot horizontal separation is maintained between water mains, water services and meters and sanitary sewer lines and laterals.	☐	☐	☐	
2.	Provide Minimum 18 inch vertical clearance maintained between water mains and sanitary sewers. Minimum of 8 foot spacing between water mains joints and sanitary sewers (note on the drawings).	☐	☐	☐	

		Yes	No	N/A	Notes/Comments
3.	Backflow prevention considered. If backflow prevention installed, complies with City of Suffolk Cross-Connection Manual.	☐	☐	☐	
	DRAWING ORGANIZATION AND FORMAT				
1.	COVER SHEET Shall contain the following:				
a.	Project Name.	☐	☐	☐	
b.	Developer's/Applicant's name, contact person(s), street address, phone number and fax number.	☐	☐	☐	
c.	Engineer's and Surveyor's (if applicable) contact person(s), street address, phone number and fax number.	☐	☐	☐	
d.	Original P.E. seal signed and dated by the Professional Engineer of Record, registered in the Commonwealth of Virginia with seal date reflecting the submittal date.	☐	☐	☐	
e.	Miss Utility verbiage, including phone number (811).	☐	☐	☐	
f.	100-Year Flood Elevation shown on Cover sheet.	☐	☐	☐	
g.	Table of Quantities for Water and Sewer (including breakdown of design flows).	☐	☐	☐	
h.	Source of the topographical survey is included.	☐	☐	☐	
	GENERAL DRAWING SHALL BE / CONTAIN:				
1.	Submitted sheets shall be no larger than 24"x 36".	☐	☐	☐	
2.	Sheet Index and Vicinity Map with north arrow.	☐	☐	☐	
3.	Vertical and horizontal datum used on the project.	☐	☐	☐	
4.	Plans contain an overall plan scaled no less than 1-inch = 600-feet and show all proposed utilities which tie to existing utilities.	☐	☐	☐	
5.	Plans clearly depict all existing and proposed site features including existing and proposed contours shown with major contours labeled. Maximum contour spacing 1-foot.	☐	☐	☐	
6.	Plans contain an overall plan of the water and/or sewer layout. The overall plan shows the sheet orientation and includes a sheet index.	☐	☐	☐	
7.	North Arrow shown on each sheet.	☐	☐	☐	

		Yes	No	N/A	Notes/Comments
8.	Standard symbols with symbol key are included on the Cover Sheet.	☐	☐	☐	
9.	All plans submitted for review comply with the format and quality control requirements of DPU Standards.	☐	☐	☐	
10.	Profiles developed at a minimum scale of 1”=40’ horizontal and 1”= 4’ vertical (i.e.-H/V=10).	☐	☐	☐	
11.	A bar scale is included on each sheet. On Plan and Profile Sheets, horizontal and vertical bar scales included.	☐	☐	☐	
12.	All known existing structures and known utilities (above and below ground) are shown on plan and profile.	☐	☐	☐	
13.	All buildings, vaults and features labeled.	☐	☐	☐	
14.	Inserts of detailed utility connections in 1”=20’ or larger scale where specific information can not be depicted on plan sheets.	☐	☐	☐	
15.	Street names, both existing and proposed are clearly labeled along with lot and tax map parcel numbers.	☐	☐	☐	
16.	Temporary Benchmarks are located every 500 feet along water lines and gravity sewers, and force mains.	☐	☐	☐	
17.	Benchmark established and identified on the plans if project site is greater than 2500 l.f. from an existing and established benchmark.	☐	☐	☐	
18.	If a horizontal bore is planned, location of jacking and receiving pit and casing air vent shown in both plan and profile views.	☐	☐	☐	
19.	Details of how utilities will be protected if existing utilities are shown within the limits of the pit.	☐	☐	☐	
20.	At jack and bore crossings, steel casing requirements are shown on the plans.	☐	☐	☐	
21.	Drawings show easements required and identify Deed Book and Page Number	☐	☐	☐	
22.	All plan sheets sealed, signed and dated by a Professional Engineer registered in the Commonwealth of Virginia.	☐	☐	☐	
23.	Plans contain a Legend which correctly reflects existing and proposed features shown on the plans.	☐	☐	☐	
24.	All existing and proposed property lines, pins easements, setback limits properly shown, labeled and	☐	☐	☐	

		Yes	No	N/A	Notes/Comments
	dimensions and, where applicable, recordation referenced.				
25.	Any affected wetlands or Resource Protection Areas (RPA) are properly shown and labeled.	☐	☐	☐	
26.	Plan and profile drawn in the same direction. Whenever possible, stations ascend from left to right.	☐	☐	☐	
27.	Provide baseline stationing for all proposed fittings and structures.	☐	☐	☐	
28.	Baseline Stationing in 100 foot increments provided on plan and profile for cross referencing	☐	☐	☐	
29.	Existing and proposed final grades shown on profile along the centerline of the proposed water and sewer lines.	☐	☐	☐	
30.	Show limits of pavement replacement for water and sewer installation.	☐	☐	☐	
31.	Landscaping is not located within PU easements or City right of way. Drip lines of trees do not encroach upon PU easements or right of ways.	☐	☐	☐	
32.	Sewer and water lines not to be owned by the city identified as “Private”.	☐	☐	☐	
33.	Call out all easements for water and sewer by width and identify as “Public Utility Easements”.	☐	☐	☐	
	GENERAL NOTES SHALL INCLUDE:				
1.	Construction, Water and Sewer notes (as a minimum, the City of Suffolk DPU Standards and Details are referenced).	☐	☐	☐	
2.	Note that all private and public materials and methods of construction shall conform to the current edition of the City of Suffolk Public Facilities Manual Volume II.	☐	☐	☐	
3.	Standard verbiage about as-built drawing requirement and easements.	☐	☐	☐	
4.	Engineer to verify inverts of all existing manholes, gas lines, water lines and other utilities prior to the start of construction. Provide test pits at critical utility areas or where reliable record information is unavailable.	☐	☐	☐	
	GENERAL DETAILS SHALL INCLUDE:				
1.	All applicable PFM details are included.	☐	☐	☐	
2.	Detail drawings of trenching, bedding, backfill and compaction requirements are shown.	☐	☐	☐	

		Yes	No	N/A	Notes/Comments
3.	Erosion control requirements and details are shown.	☐	☐	☐	
4.	For utility work which affects a large number of customers or has a significant impact on the normal operation of the system, a detailed sequence of construction limiting the impact on the system is included.	☐	☐	☐	

III. WATER SYSTEM

	PLANS - WATER SYSTEM PLAN & PROFILE				
1.	Pipe shall be labeled with size, pipe material and class.	☐	☐	☐	
2.	Dimensions are shown to locate water mains from R/W, easements, buildings, etc.	☐	☐	☐	
3.	Fire meter, backflow and vault requirements are shown on plans.	☐	☐	☐	
4.	Provide Call outs for horizontal bends, vertical bends, fittings, valves, fire hydrants and other appurtenances, with Stations and northings and eastings, on plans.	☐	☐	☐	
5.	Ditch lines are shown on plans, if applicable.	☐	☐	☐	
6.	Required restrained joint lengths along water mains on the drawings in accordance with provided calculations.	☐	☐	☐	
7.	Locations of all utilities that cross the area of the proposed water line are shown on the drawings.	☐	☐	☐	
8.	Water meter sizes noted on plans.	☐	☐	☐	
9.	Irrigation meter sizes and locations are noted on plans. Backflow prevention notes are indicated on plans.	☐	☐	☐	
	WATER SYSTEM DESIGN				
1.	Water mains are located 5 foot from face of curb or 2 foot from edge of pavement where there are ditches.	☐	☐	☐	
2.	Water service lines provided to each lot. Service lines placed 10 foot on either side of lot property line.	☐	☐	☐	
3.	Water mains larger than 6 -inches with less than 3 feet or greater than 12 feet of cover are D.I. pipe.	☐	☐	☐	
4.	Minimum ground cover over all pipes meets minimum criteria (20” and smaller = 36”, 24” and larger = 42”).	☐	☐	☐	

		Yes	No	N/A	Notes/Comments
5.	Minimum water main size is 6 inches in diameter for residential areas and 8 inches in diameter for multi-family, commercial, and industrial areas.	☐	☐	☐	
6.	All water mains are looped and there are no dead-ends. If dead-ends are present, an exception has been requested.	☐	☐	☐	
7.	A hydrant or blow-off valve is provided at dead-ends.	☐	☐	☐	
8.	Fire hydrant spacing has been coordinated with City of Suffolk Fire Department.	☐	☐	☐	
9.	A minimum of 12" separation is provided between proposed water mains and storm drain lines when water mains are located under storm drains.	☐	☐	☐	
10.	Valves installed at every pipe intersection. Minimum number of valves: Use N-1 Rule with N being the number of pipes entering a junction.. For tees, N-1 is 2 valves and crosses 3 valves. Valves are located no more than 3 feet from fitting.	☐	☐	☐	
11.	Water valve sizes – Up to 12", gate valves; over 12" butterfly valves.	☐	☐	☐	
12.	Isolation valves spaced at 1500 feet minimum, 2500 feet maximum.	☐	☐	☐	
13.	Air Release Assembly or fire hydrant indicated where high points in water line cannot be eliminated when approved by DPU. If fire hydrant or services are located at high points, then Air Release Assembly may not be required.	☐	☐	☐	
14.	Pipe profiles are drawn (as practical) to minimize high points in the pipeline	☐	☐	☐	

IV. GRAVITY SANITARY SEWER SYSTEM

	PLANS - GRAVITY SYSTEM PLAN AND PROFILE				
1.	Provide profiles for all gravity sewers (public and private), including stub-outs within five-feet of adjoining property or future extensions.	☐	☐	☐	
2.	Provide Manhole data (Station, inverts in(s), invert out, top elevation and manhole size and type) shown in plan and profile. Centerline coordinates of all manholes shown on plan.	☐	☐	☐	

		Yes	No	N/A	Notes/Comments
3.	Deflection angles or bearings of all sewers are shown on plans.	☐	☐	☐	
4.	A note shall be provided for all drop connections referencing appropriate detail.	☐	☐	☐	
5.	All existing manholes shall be labeled.	☐	☐	☐	
6.	Detail Drawings of manholes: Standard, drop, doghouse, etc. are on the detail sheet.	☐	☐	☐	
7.	All minimum finished floor and basement elevations shall be shown on plans, where applicable.	☐	☐	☐	
8.	Dimension shown to locate sewer lines from R/W, easements, buildings, etc.	☐	☐	☐	
9.	Show locations of all existing and proposed utilities that cross within the area of the proposed gravity sewer line.	☐	☐	☐	
10.	Table for the sewer system including ultimate owner of the sewerage project, average daily design flow (gpd), peak design flow (gpd), and name of the owner of the first downstream pump station that will receive flow from this project.	☐	☐	☐	
	GRAVITY SYSTEM DESIGN				
1.	Pipe slopes are equal or greater than the requirements presented in the PFM.	☐	☐	☐	
2.	Minimum sewer main size is 8 inches.	☐	☐	☐	
3.	All pipe between manholes are to be of like size, material and class and are labeled with length, pipe type and class, pipe size and pipe slope.	☐	☐	☐	
4.	Manholes located in roadways are on the centerline or ¼ points.	☐	☐	☐	
5.	All sewer mains end with a manhole.	☐	☐	☐	
6.	Manhole Spacing: 400 feet, max.	☐	☐	☐	
7.	Minimum Manhole Diameter: less than 12 feet deep – 48” dia., Over 12 feet deep – 60” dia.	☐	☐	☐	
8.	Manhole rims are above the 100-Year Flood Elevation. If not, require watertight manholes with inserts.	☐	☐	☐	
9.	Commercial and industrial laterals are at least 6” diameter.	☐	☐	☐	
10.	Residential laterals are at least 4” diameter.	☐	☐	☐	

		Yes	No	N/A	Notes/Comments
11.	Angle of sewer entry into manholes is at least 90º or greater to the downstream sewer pipe.	☐	☐	☐	
12.	Sanitary sewer lateral provided to each lot. Laterals may be placed 10 foot on either side of lot centerline.	☐	☐	☐	
13.	Sewers with less than 3' or greater than 12 feet of cover are D.I. pipe.	☐	☐	☐	
14.	Minimum depth to all sewers = 3.0 feet unless otherwise approved by the City.	☐	☐	☐	
15.	Full joint pressure pipe used where minimum 18-inch vertical separation from water main cannot be achieved.	☐	☐	☐	
16.	Crowns of all sewers entering manholes are at crown's level or higher as required.	☐	☐	☐	
17.	Protective measures when minimum separation with other large structures (ie. storm drains, water lines) is not present.	☐	☐	☐	

V. FORCE MAIN

	PLANS - FORCE MAIN PLAN AND PROFILE				
1.	Plan indicates pipe diameter, material	☐	☐	☐	
2.	Stations shown for horizontal bends, vertical bends, fittings, valves, and other appurtenances.	☐	☐	☐	
3.	Manual air vents indicated where high points in force main cannot be eliminated.	☐	☐	☐	
4.	Horizontal fittings called out in plan and profile. Vertical fittings only called out in profile.	☐	☐	☐	
5.	Profile indicates type and class of pipe and type of joint.	☐	☐	☐	
6.	Restrained joint lengths by pipe size and fitting type shall be included on the profile plans for PVC and DIP force main as applicable.				
	FORCE MAIN DESIGN				
1.	Minimum diameter for Private Force Main is 2-inch.	☐	☐	☐	
2.	If force main is located along stream, lake, impoundment - force main shall be at least 10 feet outside top of bank.	☐	☐	☐	
3.	Stream and road crossings shall be as close to 90º as possible.	☐	☐	☐	
4.	Isolation valve spacing: shall be minimum = 1500 feet, maximum = 2500 feet.	☐	☐	☐	

		Yes	No	N/A	Notes/Comments
5.	Valves in force mains are gate or plug valves.	☐	☐	☐	
6.	Force main discharges into gravity sewer manholes shall be no higher than 2 feet above invert, if applicable.	☐	☐	☐	
7.	Force main discharging into manhole detail, if applicable.	☐	☐	☐	
8.	Minimum cover over force main is 36-inches.	☐	☐	☐	

VI. PLANS – PUMPING STATION

	Site Plan				
1.	Dimensions shall be shown to locate Pump Station building from R/W, easements, buildings, etc. Provide Northing and Easting coordinates for each corner of the building.	☐	☐	☐	
2.	Show emergency bypass connection with respect to force main connection.	☐	☐	☐	
3.	Site shall be graded to divert runoff away from pump building.	☐	☐	☐	
4.	Set back limits shall be shown on plan.	☐	☐	☐	
5.	Driveway shall be provided.	☐	☐	☐	
6.	All required landscaping shall be shown in accordance with the UDO.	☐	☐	☐	
7.	Transformer locations shall be shown and maintain required clearances from DPU utilities.	☐	☐	☐	
8.	Provide Exterior/Security lighting calculations and illumination plan. Should be under Calculations Section.	☐	☐	☐	
9.	At least one (1) Temporary Benchmark shall be provided.	☐	☐	☐	
10.	Sufficient space has been provided for staging, special erosion control facilities, spoil storage and waste storage.	☐	☐	☐	
11.	Provide Storm drain plan including culvert sizes and materials.	☐	☐	☐	
12.	Test holes and soil boring locations are shown.	☐	☐	☐	

		Yes	No	N/A	Notes/Comments
13.	Provide Domestic water line with meter and backflow preventer.	☐	☐	☐	
14.	Demolition Plan has been provided, if pertinent.	☐	☐	☐	
15.	Determine 100-Year Flood Elevation at site. Finished floor elevation to be above 100-Year Flood Elevation.	☐	☐	☐	
16.	Plat provided to DPU for review and approval prior to recordation.	☐	☐	☐	
	Architectural Shall include:				
1.	Architectural Details – Wall Sections, Roof Section.	☐	☐	☐	
2.	Architectural Details - Windows, Doors, Louvers, Sills, and Finish Details.	☐	☐	☐	
3.	Architectural Schedules - Windows, Doors, Hardware, Paint, Louvers, and Sills.	☐	☐	☐	
4.	Typical wall section for pump building, wet well and vaults. Section shows materials, reinforcing, insulation and trim.	☐	☐	☐	
5.	Roof framing plan.	☐	☐	☐	
6.	Minimum 42” railing height with three (3) rails, with 4” high toe guard.	☐	☐	☐	
7.	Stair handrails and non-slip surfaces. Stair safety landings at 12 foot maximum intervals, if applicable.	☐	☐	☐	
8.	Stair sections are dimensioned and show all head/access clearances.	☐	☐	☐	
	Mechanical and Structural				
1.	Station conforms to appropriate “Prototype Station”.	☐	☐	☐	
2.	Water stops in concrete walls, Expansion joints in masonry walls.	☐	☐	☐	
3.	Wet well coating or lining specified on plans.	☐	☐	☐	
4.	All miscellaneous metal in the wet well to be Type 316L stainless steel or aluminum.	☐	☐	☐	
5.	Vault drains into wetwell. P-trap is provided in wet well.	☐	☐	☐	
6.	Check that all minimum clearances are provided.	☐	☐	☐	
7.	Proper spacing between pumps and between pumps and walls has been provided.	☐	☐	☐	

		Yes	No	N/A	Notes/Comments
8.	Pump access doors are of adequate size for pump removal. Adequate pump removal equipment has been provided.	☐	☐	☐	
9.	2 foot minimum between outside wall and first joint of pipe for both influent and effluent.	☐	☐	☐	
10.	Link-Seals are provided and noted to caulk both sides. Kor-N-Seal boots are not allowed at pumping stations.	☐	☐	☐	
11.	Personnel and truck access doors, if applicable.	☐	☐	☐	
12.	Floor drains or slope provided for wash water disposal.	☐	☐	☐	
13.	Indicate minimum pump submergence.	☐	☐	☐	
14.	Reinforcing clearances are shown.	☐	☐	☐	
15.	Dry well/valve pit ventilation to be “supply”.	☐	☐	☐	
	Station Piping Plan				
1.	Provide Means of isolating entire pumping station.	☐	☐	☐	
2.	Isolation gate valves for each pump. Check valve installed on discharge pipe. For submersible stations valves shall be in a separate pit outside the wet well.	☐	☐	☐	
3.	Permanent emergency by-pass pump connection shall be provided. Quick-couplings are called out.	☐	☐	☐	
4.	Sump and sump pump with automatic control (required for wet pit/dry pit stations.	☐	☐	☐	
5.	Dehumidifier is located on a Type 316L stainless steel wall bracket with bottom set 2 feet above pump room floor. Dehumidifier drains into sump.	☐	☐	☐	
6.	Proper O.S.H.A. signage provided.	☐	☐	☐	
	Wet Well				
1.	A minimum of two pumps are to be installed. Station must be able to pump Design flow with any single pump out of service.	☐	☐	☐	
2.	Method of pump removal uses a permanently attached Type 316L stainless steel cable or chain for submersible and an electric hoist for wet pit/dry pit. Adequate clearances have been provided to permit pump removal	☐	☐	☐	
3.	Chain length provided is of adequate length to reach pump room floor.	☐	☐	☐	

		Yes	No	N/A	Notes/Comments
	Electrical				
1.	Connected Load Schedule is provided.	☐	☐	☐	
2.	Electrical service is adequate.	☐	☐	☐	
3.	Electrical equipment shall be located in the pump building. Electrical equipment meets NEC for Class 1, Group D, Division 1 locations and be suitable for corrosive conditions.	☐	☐	☐	
4.	For major pieces of equipment - horsepower ratings, phases and voltages match each other on different sheets.	☐	☐	☐	
5.	Elapsed time meters provided for each pump. Pumps shall be alternating.	☐	☐	☐	
6.	Lightning protection is provided.	☐	☐	☐	
7.	Protection from voltage spikes.	☐	☐	☐	
8.	Variable Frequency Drives are shown, if applicable. Range of initial settings are indicated.	☐	☐	☐	
9.	Type of Emergency Generator Power is indicated.	☐	☐	☐	
10.	Stand-by Generator. Supply fuel tank w/ 48-hour fuel supply.	☐	☐	☐	
11.	Generator supplied stations have sequencing controls to start pumps individually.	☐	☐	☐	
12.	Telemetry meets DPU Standards.	☐	☐	☐	
13.	Proper ranges and units specified.	☐	☐	☐	
14.	Adequate visibility for gauges and readouts.	☐	☐	☐	
15.	Provide adequate expansion in transmitters and receivers.	☐	☐	☐	
16.	Lighting levels are shown on the Plans.	☐	☐	☐	
17.	Electrical floor plan matches mechanical and architectural floor plans (lighting, boards and panel locations).	☐	☐	☐	
18.	Light switches and wall receptacles shown.	☐	☐	☐	
19.	Conduit sizes shown and exposed/concealed noted.	☐	☐	☐	
20.	Conduits in wet well are rigid steel PVC coated.	☐	☐	☐	
21.	Sufficient maintenance space provided around electrical panels.	☐	☐	☐	

		Yes	No	N/A	Notes/Comments
22.	Transfer Switch shown on electrical plan.	☐	☐	☐	
23.	Emergency electrical connection.	☐	☐	☐	
24.	Pump failure alarm on exterior of building.	☐	☐	☐	
25.	No junction boxes or panels in wet well.	☐	☐	☐	
26.	Lighting, Panel, and Heater Schedules.	☐	☐	☐	
27.	Seal-offs called out.	☐	☐	☐	
28.	Photocell control for exterior lighting.	☐	☐	☐	
29.	Adequate spare circuits are provided.	☐	☐	☐	
30.	Schedules for major pieces of equipment have electrical connections and horsepower ratings, phases and voltages that match other discipline schedules.	☐	☐	☐	
31.	Control System by PFM Standard	☐	☐	☐	
32.	Main Service Disconnect Switch is provided.	☐	☐	☐	
33.	Pump station entrance panel is shown and applicable functions are connected properly.	☐	☐	☐	
34.	Dry well light switch is interlocked with dry well exhaust fan.	☐	☐	☐	
35.	Control room is equipped with an intake louver and gravity damper.	☐	☐	☐	

All of the items indicated on the above check list are accurately reflected in the attached Plans and Specifications.

Plan Reviewer's Signature: _____Review Date:_____

Review Notes:

_____

_____

_____

_____

_____

WATER DISTRIBUTION SYSTEM
ACCEPTANCE CHECK LIST

Project Name: _____

Project Location: _____

Developer: _____

Engineer of Record: _____

Phone: _____ Fax: _____ E-mail: _____

****

Note: This Check List shall be completed and submitted to the City of Suffolk Department of Public Utilities (DPU) prior to acceptance of water distribution system into the City system. The Check List shall be signed by the Contractor and City Inspector. This Check List serves only as a guide for the Contractor and is not intended to be all encompassing. It is the responsibility of the Engineer of Record and Contractor to ensure that the water distribution system complies with the plans and specifications and all governing regulations. Any item response indicating "N/A" shall be explained, attach a separate sheet to the submittal for explanations, with the reason for noncompliance.

****

I. GENERAL

		Yes	No	N/A
1.	Engineers Certification of system completed in accordance with VDH Waterworks Regulations received.	☐	☐	☐
2.	Required easements have been obtained, recorded and transferred to the City.	☐	☐	☐
3.	CD containing all of the "Certified Record Drawings" showing horizontal and vertical data (elevations & locations) for the project received.	☐	☐	☐
4.	Copy of the approved shop drawings received.	☐	☐	☐
5.	Construction debris has been removed from site and properly disposed of.	☐	☐	☐
6.	Site has been fine graded to final elevations per the contract drawings.	☐	☐	☐
7.	Landscaping is installed.	☐	☐	☐
8.	Driveways have been patched with similar materials from the edge of the roadway to the right-of-way line.	☐	☐	☐
9.	Roadway patching is complete and road has been milled and overlaid as called for on the approved drawings.	☐	☐	☐

		Yes	No	N/A
10.	Disturbed non-paved areas have been sodded or an acceptable stand of grass has been established.	☐	☐	☐
11.	Erosion control measures have been removed and properly disposed of as directed by the City.	☐	☐	☐

II. WATER MAINS

1.	All testing scheduled and accepted by the City.	☐	☐	☐
2.	Repairs of all failed tests inspected by City's inspector.	☐	☐	☐
3.	Pressure test results for the water main recieved. (If tested in sections, the results for each section must be submitted.) Results from all pressure tests, even failed tests received.	☐	☐	☐
4.	Bacteriological test passed.	☐	☐	☐
5.	Valves are in the open position upon acceptance by the City.	☐	☐	☐
	Ductile Iron Pipe			
6.	Provide initial test data for cathodic protection test stations (if applicable).	☐	☐	☐

Inspector's Signature: **Date**

Typed or Printed Name

Contractor's Signature: **Date**

Typed or Printed Name

Checked by Construction Manager

Signature Date

Typed or Printed Name

City of Suffolk

Public Utilities Department
Division of Engineering

APPENDIX B-4
Pressure Test Form

Formula: $L = \frac{SD\sqrt{P}}{148{,}000}$

For: PVC or DIP Pipe
Where: L = allowable leakage, in gallons per hour
S = length of pipe tested, in feet
D = nominal diameter of pipe, in inches
P = average test pressure during the leakage test, in pounds per square inch

Project: _____

Contractor: _____

INSPECTOR/ DATE	LOCATION	PIPE SIZE	LENGTH	TIME	ALLOWABLE LEAKAGE	PASS/FAIL

NOTES:

City of Suffolk

Public Utilities Department
Division of Engineering

APPENDIX B-5
Sewer Slopes Check Form

Project: _____

Contractor: _____

Sewer Section	Invert Up	Invert Down	Length (FT)	%Proposed	% Field	Contractor Rep.	City Rep.	Date of Install

NOTES:

City of Suffolk
Public Utilities Department
Division of Engineering

APPENDIX B-6
Sewer System Test Form

Project Name: _____

Contractor: _____

INSPECTOR/DATE	M.H. SECTIONS	DIAMETER	PIPE TYPES		TESTS			M.H. INSPECTIONS
			SDR-26	D.I.	Mandrel	CCTV	AIR	

NOTES:

SANITARY SEWER SYSTEM
ACCEPTANCE CHECK LIST

Project Name: _____

Project Location: _____

Developer: _____

Engineer of Record: _____

Phone: _____ Fax: _____ E-mail: _____

****

Note: This Check List shall be completed and submitted to the City of Suffolk Department of Public Utilities (DPU) prior to acceptance of the sanitary sewer system into the City system. The Check List shall be signed by the Contractor and City Inspector. This Check List serves only as a guide for the Contractor and is not intended to be all encompassing. It is the responsibility of the Engineer of Record and Contractor to ensure that the sanitary sewer system complies with the plans and specifications and all governing regulations. Any item response indicating "N/A" shall be explained, attach a separate sheet to the submittal for explanations, with the reason for noncompliance.

****

I. GENERAL

		Yes	No	N/A
1.	Engineers Certification of system completed in accordance with this PFM and VDEQ requirements received.	☐	☐	☐
2.	Certificate to Operate received.	☐	☐	☐
3.	CD containing all of the "Certified Record Drawings" showing all horizontal and vertical data for the project received.	☐	☐	☐
4.	Required deeds and/or easements have been obtained, recorded, and transferred to the City.	☐	☐	☐
5.	Copy of the approved Shop Drawings received.	☐	☐	☐
6.	Construction debris has been removed from site and properly disposed of.	☐	☐	☐
7.	Site has been fine graded to final elevations per the contract drawings.	☐	☐	☐
8.	Landscaping is installed.	☐	☐	☐
9.	Driveways have been patched with similar materials from the edge of the roadway to the right-of-way line.	☐	☐	☐
10.	Roadway patching is complete and road has been milled and overlaid as called for on the Approved drawings.	☐	☐	☐

		Yes	No	N/A
11.	Disturbed non-paved areas have been sodded or an acceptable stand of grass has been established.	☐	☐	☐
12.	Erosion control measures have been removed and properly disposed of as directed by the City.	☐	☐	☐
13.	Repairs of all failed tests have been inspected by City.	☐	☐	☐
14.	All testing scheduled and accepted by the City.	☐	☐	☐
	Gravity Sewer	☐	☐	☐
	Manholes	☐	☐	☐
	Force Main	☐	☐	☐

II. GRAVITY SEWERS AND MANHOLES

	Gravity Sewers	Yes	No	N/A
1.	Low pressure air test results for each section of gravity sewer received.	☐	☐	☐
2.	Results of mandrel testing for each section of gravity sewer (PVC pipe) received.	☐	☐	☐
3.	Proof of proper pipe installation between manholes with use of certified CCTV received and reviewed.	☐	☐	☐
	Manholes			
4.	Vacuum testing results for each manhole received.	☐	☐	☐

III. FORCE MAINS

		Yes	No	N/A
1.	Pressure test results for the force main received. (If tested in sections, the results for each section must be submitted.) Provide results from all pressure and leakage tests, even failed tests.	☐	☐	☐
2.	All valves are in the open position upon acceptance by the City.	☐	☐	☐
	Ductile Iron Pipe	Yes	No	N/A
3.	Initial test data for cathodic protection test stations received (if applicable).	☐	☐	☐
4.	Confirm pipe is laid to grade.	☐	☐	☐

City Inspector's Signature:

_____ _____
Typed or Printed Name Date

Contractor's Signature:

_____ _____
Typed or Printed Name Date

Checked by Construction Manager: _____
Signature

_____
Type or Printed Name

_____
Date

NOTES:

FACTORY ACCEPTANCE TEST (FAT)
CHECK LIST FOR
FOR
SANITARY PUMP STATIONS

Project Name: _____

Project Address: _____

Test Type (Un-Witnessed / Witnessed): _____

Engineer of Record: _____

Phone: _____ E-Mail _____ Date: _____

TEST PASSED?: YES ☐ NO ☐

****

This Check List shall be completed during the Un-Witnessed FAT and given to the EOR by the CSI prior to requesting a Witnessed FAT.

The CSI shall install and test the PLC and OIT Configuration Programs during the Un-Witnessed FAT. After successful testing of the PLC and OIT Configuration Programs has been documented, the CSI shall forward these program files to the City I&C Engineer. The City I&C Engineer shall provide the PLC Operational Control Logic Program and OIT Graphical Application Program files to the CSI within two weeks of receiving the PLC and OIT Configuration Program files.

The Check List shall also be used for the Witnessed FAT. It is the responsibility of the EOR, CSI and the Contractor to ensure that the Pump Station instrumentation and controls comply with the plans and specifications and all governing regulations. Any item response indicating "NO" shall be repaired or replaced at no cost to the City. The Contractor shall submit a letter to the Department stating that all items with a "NO" have been repaired before the Witnessed FAT is called for.
****

I. PUMP CONTROL SYSTEM

		Yes	No	N/A
1.	Approved Shop drawings are onsite for the Pump Control Panel and Motor Control Panels.	☐	☐	☐
3.	Pump Control Panel and Motor Control Panels are onsite and wiring terminations (control and power) are completed for configuration testing.	☐	☐	☐
4.	All network devices are installed and wire/cable terminations are complete are complete for configuration testing.	☐	☐	☐
5.	All Instruments (Level Transducer, Station Pressure Transmitter, Gauges etc.) are field calibrated and ranges verified.	☐	☐	☐
6.	PLC Configuration Program (without operational control logic) is downloaded to the PLC and in operation.	☐	☐	☐
7.	OIT Configuration Program (without operational graphics display) is downloaded to the OIT and in operation.	☐	☐	☐
8.	Test the communications between the PLC and I/O modules, PLC and Motor Control Communication Modules, and PLC and OIT. Verify proper functionality of the communication network and immunity to outside electrical noise.	☐	☐	☐
9.	Test all PLC I/O loops by simulating field device wiring to the PLC I/O point. Include testing equipment as required to verify all digital and analog I/O points as detailed in the PLC I/O Checklist in Section II.	☐	☐	☐
10.	Test all Motor Control Panel controls (remote and local) to verify proper operation of the Pump Control System.	☐	☐	☐
11.	Test all PLC controls (automatic and manual) and to verify proper operation of the Pump Control System.	☐	☐	☐
12.	Test the PLC battery backup in the event of a loss of power.	☐	☐	☐

II. PLC I/O CHECKLIST

TAG #	Description	Address	Slot	Point	FAT	N/A	Remarks
SS-2A	PUMP 1 IN HAND MODE	I:0/0	1	0	☐	☐	FROM PCP PUMP 1 H-O-A
SS-2B	PUMP 1 IN AUTO MODE	I:0/1	1	1	☐	☐	FROM PCP PUMP 1 H-O-A
TSH-101	PUMP 1 MOTOR WINDING HIGH TEMPERATURE	I:0/2	1	2	☐	☐	FROM PCP MOTOR CONNECTION
SFR-101	PUMP 1 SEAL FAIL	I:0/3	1	3	☐	☐	FROM SEAL MONITOR RELAY
ZSX-101	PUMP 1 PUMP CHECK VALVE STATUS	I:0/4	1	4	☐	☐	FROM CHECK VALVE PLC INPUT
LPB-1	PUMP 1 PUMP FAIL RESET	I:0/5	1	5	☐	☐	FROM PCP LPB-1
MIR-101A	PUMP 1 RUNNING	I:0/6	1	6	☐	☐	FROM PUMP 1 VFD
MIF-101A	PUMP 1 FAULT	I:0/7	1	7	☐	☐	FROM PUMP 1 VFD
SS-1	PUMP 1 REMOTE POSITION	I:0/10	1	10	☐	☐	FROM PUMP 1 STARTER SWITCH
SS-1A	LEAD LAG PUMP SELECTION 1-2	I:0/11	1	11	☐	☐	FROM PCP SS-1
SS-1B	LEAD LAG PUMP SELECTION 2-1	I:0/12	1	12	☐	☐	FROM PCP SS-1
FS-1 (CR-DW)	DRY WELL LEVEL HIGH	I:0/13	1	13	☐	☐	FROM DRY WELL FLOAT
FS-2 (CR-AL)	FLOAT MODE STOP (LEVEL LOW)	I:0/14	1	14	☐	☐	FROM LOW WET WELL FLOAT
FS-3 (CR-AH)	FLOAT MODE START (HIGH LEVEL)	I:0/15	1	15	☐	☐	FROM HIGH WET WELL FLOAT
SS-3A	PUMP 2 IN HAND MODE	I:1/0	2	0	☐	☐	FROM PCP PUMP 2 H-O-A
SS-3B	PUMP 2 IN AUTO MODE	I:1/1	2	1	☐	☐	FROM PCP PUMP 2 H-O-A
TSH-201	PUMP 2 MOTOR WINDING HIGH TEMPERATURE	I:1/2	2	2	☐	☐	FROM PCP MOTOR CONNECTION
SFR-201	PUMP 2 SEAL FAIL	I:1/3	2	3	☐	☐	FROM SEAL MONITOR RELAY

TAG #	Description	Address	Slot	Point	FAT	N/A	Remarks
ZSX-201	PUMP 2 PUMP CHECK VALVE STATUS	I:1/4	2	4	☐	☐	FROM CHECK VALVE PLC INPUT
LPB-2	PUMP 2 PUMP FAIL RESET	I:1/5	2	5	☐	☐	FROM PCP LPB-2
MIR-101A	PUMP 2 RUNNING	I:1/6	2	6	☐	☐	FROM PUMP 2 VFD
MIF-101A	PUMP 2 FAULT	I:1/7	2	7	☐	☐	FROM PUMP 2 VFD
SS-2	PUMP 2 REMOTE POSITION	I:1/10	2	10	☐	☐	FROM PUMP 2 STARTER SWITCH
GR-1	GENERATOR RUN	I:1/11	2	11	☐	☐	FROM GENERATOR
GF-1	GENERATOR COMMON FAULT	I:1/12	2	12	☐	☐	FROM GENERATOR
CR-PFR	LOSS OF CONTROL POWER	I:1/13	2	13	☐	☐	FROM PCP CONTROL POWER RELAY
UV-101	LOSS OF STATIONPOWER	I:1/14	2	14	☐	☐	FROM TRANSFER SWITCH 3 PHASE POWER LOSS
XFR-101	TRANSFER SWITCH POSITION	I:1/15	2	15	☐	☐	FROM TRANSFER SWITCH
SS-4A	PUMP 1 IN VFD MODE	I:2/0	3	0	☐	☐	FROM PCP PUMP 1 VFD-BYPASS
SS-4B	PUMP 2 IN VFD MODE	I:2/1	3	1	☐	☐	FROM PCP PUMP 2 VFD-BYPASS
	DISCRETE OUTPUT						**DISCRETE OUTPUT**
MC-101C	PUMP 1 PUMP REQUIRED	O:0/0	4	0	☐	☐	TO PCP (REQUIRED PL-8) & CR-1
MI-101A	PUMP 1 RUNNING	O:0/1	4	1	☐	☐	TO PCP (RUNNING PL-9) & TO SCADA
MF-101A	PUMP 1 FAULT/LOCKOUT	O:0/2	4	2	☐	☐	TO PCP (FAILED LPB-1) & ALARM TO SCADA
TSH-101	PUMP 1 OVER TEMPERATURE	O:0/3	4	3	☐	☐	TO PCP (OVER TEMP PL-5)
SFM-1	PUMP 1 SEAL FAIL	O:0/4	4	4	☐	☐	TO PCP (SEAL FAIL PL-4)
MF-101B	PUMP 1 ALARM	O:0/5	4	5	☐	☐	FROM PCP ALARM TO SCADA
NF-110	PLC FAIL	O:0/6	4	6	☐	☐	FROM PCP ALARM TO SCADA
SPARE	SPARE	O:0/7	4	7			
UV-110	POWER FAIL	O:0/8	4	8	☐	☐	FROM PCP ALARM TO SCADA
LSL-101	FLOAT MODE STOP	O:0/9	4	9	☐	☐	FROM PCP ALARM TO SCADA

TAG #	Description	Address	Slot	Point	FAT	N/A	Remarks
LSH-101	FLOAT MODE START	O:0/10	4	10	☐	☐	FROM PCP ALARM TO SCADA
MC-201C	PUMP 2 PUMP REQUIRED	O:1/0	5	0	☐	☐	TO PCP (REQUIRED PL-10) & CR-2
MI-201A	PUMP 2 RUNNING	O:1/1	5	1	☐	☐	TO PCP (RUNNING PL-11) & TO SCADA
MF-201A	PUMP 2 FAULT/LOCKOUT	O:1/2	5	2	☐	☐	TO PCP (FAILED LPB-2) & ALARM TO SCADA
TSH-201	PUMP 2 OVER TEMPERATURE	O:1/3	5	3	☐	☐	TO PCP (OVER TEMP PL-7)
SFM-2	PUMP 2 SEAL FAIL	O:1/4	5	4	☐	☐	TO PCP (SEAL FAIL PL-6)
MF-201B	PUMP 2 ALARM	O:1/5	5	5	☐	☐	FROM PCP ALARM TO SCADA
GR-1	GENERATOR RUN	O:1/6	5	6	☐	☐	ALARM TO SCADA
GF-1	GENERATOR FAIL	O:1/7	5	7	☐	☐	ALARM TO SCADA
XFR-101	ATS EMERGENCY POSITION	O:1/8	5	8	☐	☐	ALARM TO SCADA
	ANALOG INPUT						**ANALOG INPUT**
LI-100	WET WELL LEVEL	I:3/0	6	0	☐	☐	FROM LE/LT-100
PI-200	FORCE MAIN PRESSURE	I:3/0	6	1	☐	☐	FROM PE/PT-200
PUMP-1SA	PUMP 1 SPEED FEEDBACK	I:3/0	6	2	☐	☐	FROM PUMP 1 VFD
PUMP-2SA	PUMP 2 SPEED FEEDBACK	I:3/0	6	3	☐	☐	FROM PUMP 2 VFD
	ANALOG OUTPUT						**ANALOG OUTPUT**
PUMP-1C	PUMP 1 LOAD CURRENT	O:4/0	8	0	☐	☐	TO SCADA (VALUE TO BE DETERMINED)
PUMP-2C	PUMP 2 LOAD CURRENT	O:4/1	8	1	☐	☐	TO SCADA (VALUE TO BE DETERMINED)
PUMP-1SA	PUMP 1 SPEED FEEDBACK	O:4/2	8	2	☐	☐	SPEED FEEDBACK TO SCADA
PUMP-2SA	PUMP 2 SPEED FEEDBACK	O:4/3	8	3	☐	☐	SPEED FEEDBACK TO SCADA
PUMP-1SB	PUMP 1 SPEED CONTROL	O:4/4	8	4	☐	☐	TO PUMP 1 VFD
PUMP-2SB	PUMP 2 SPEED CONTROL	O:4/5	8	5	☐	☐	TO PUMP 2 VFD

CSI Printed Name/Signature/Date:_____

Witness Printed Name/Signature/Date:_____

NOTES:

_____

_____

_____

_____

_____

_____

_____

_____

_____

PRE-SITE ACCEPTANCE TEST (PRE-SAT)
CHECK LIST FOR
FOR
SANITARY PUMP STATIONS

Project Name: _____

Project Address: _____

Control Systems Integrator (CSI): _____

Phone: _____ Fax: _____ E-mail: _____

TEST PASSED?: YES ☐ NO ☐

****

This Check List shall be completed and given to the Engineer of Record by the Control Systems Integrator prior to requesting a Witnessed SAT. It is the responsibility of the Engineer of Record and the Contractor to ensure that the Pump Station instrumentation and controls comply with the plans and specifications and all governing regulations.

****

I. PUMP CONTROL SYSTEM

		Yes	No	N/A
1.	Approved Shop drawings are onsite for the Pump Control Panel and Motor Control Panels.	☐	☐	☐
2.	Spare parts are on-site (at the pump station).	☐	☐	☐
3.	Pump Control Panel and Motor Control Panels have been installed at the station and wiring terminations (control and power) are completed and verified	☐	☐	☐
4.	All control wires are pulled, labeled, connected, tested, and verified.	☐	☐	☐
5.	All network cables are pulled, labeled, connected, and connections tested.	☐	☐	☐
6.	All network devices are installed and connected.	☐	☐	☐
7.	All Instruments (Level Transducer, Station Pressure Transmitter, Gauges etc.) are field calibrated and ranges verified.	☐	☐	☐
8.	Test the communications between the PLC and I/O modules, PLC and Motor Control Communication Modules, and PLC and OIT. Verify proper functionality of the communication network and immunity to outside electrical noise.	☐	☐	☐
9.	Test all PLC I/O loops from the end element to the to the PLC	☐	☐	☐

		Yes	No	N/A
	I/O point. Include instruments, control devices, panels, termination cabinets, I/O devices, and other devices in the loop to ensure proper operation and linkage to the PLC and OIT. Test all points as detailed in the PLC I/O Checklist in Section III.			
10.	Test all Motor Control Panel controls (remote and local) to verify proper operation of the Pump Control System.	☐	☐	☐
11.	Test the PLC battery backup in the event of a loss of power.	☐	☐	☐
12.	Generator and ATS have been tested and approved for use.	☐	☐	☐
13.	Pumps have been tested and approved for use.	☐	☐	☐

II. SCADA

(Verify that all Alarms and Indicators function at the Station

		YES	NO	N/A
1.	Telog Panel has been installed at the station and wiring terminations (control and power) are completed and verified.	☐	☐	☐
2.	Test the following alarms, status signals, and analog signals are being communicated to the Telog system and the Department's Operation Center.			
	1. Pump 1 Running……...	☐	☐	☐
	2. Pump 1 Fail/Lockout……....	☐	☐	☐
	3. Pump 1 Fault Alarm…….	☐	☐	☐
	4. Pump 2 Running……...	☐	☐	☐
	5. Pump 2 Fail/Lockout……	☐	☐	☐
	6. Pump 2 Fault Alarm…….	☐	☐	☐
	7. PLC Fail…….....	☐	☐	☐
	8. Station Power Fail……	☐	☐	☐
	9. Float Mode Stop (Low Float Switch) ……..	☐	☐	☐
	10. Float Mode Start (High Float Switch) …….	☐	☐	☐
	11. Pump 2 Over Temperature Alarm……	☐	☐	☐
	12. Generator Running Alarm….……...	☐	☐	☐
	13. Generator Fault Alarm……...……...	☐	☐	☐
	14. ATS Emergency Position……..……...	☐	☐	☐
	15. Dry Well Flood……	☐	☐	☐

		YES	NO	N/A
	16. High Wet Well Level……	☐	☐	☐
	17. Pump 1 Amperage……	☐	☐	☐
	18. Pump 2 Amperage……	☐	☐	☐
	19. Wet Well Level……	☐	☐	☐
	20. Force Main Pressure……	☐	☐	☐

III. PLC I/O CHECKLIST

TAG #	Description	Address	Slot	Point	FAT	N/A	Remarks
	DISCRETE INPUT						**DISCRETE INPUT**
SS-2A	PUMP 1 IN HAND MODE	I:0/0	1	0	☐	☐	FROM PCP PUMP 1 H-O-A
SS-2B	PUMP 1 IN AUTO MODE	I:0/1	1	1	☐	☐	FROM PCP PUMP 1 H-O-A
TSH-101	PUMP 1 MOTOR WINDING HIGH TEMPERATURE	I:0/2	1	2	☐	☐	FROM PCP MOTOR CONNECTION
SFR-101	PUMP 1 SEAL FAIL	I:0/3	1	3	☐	☐	FROM SEAL MONITOR RELAY
ZSX-101	PUMP 1 PUMP CHECK VALVE STATUS	I:0/4	1	4	☐	☐	FROM CHECK VALVE PLC INPUT
LPB-1	PUMP 1 PUMP FAIL RESET	I:0/5	1	5	☐	☐	FROM PCP LPB-1
MIR-101A	PUMP 1 RUNNING	I:0/6	1	6	☐	☐	FROM PUMP 1 VFD
MIF-101A	PUMP 1 FAULT	I:0/7	1	7	☐	☐	FROM PUMP 1 VFD
SS-1	PUMP 1 REMOTE POSITION	I:0/10	1	10	☐	☐	FROM PUMP 1 STARTER SWITCH
SS-1A	LEAD LAG PUMP SELECTION 1-2	I:0/11	1	11	☐	☐	FROM PCP SS-1
SS-1B	LEAD LAG PUMP SELECTION 2-1	I:0/12	1	12	☐	☐	FROM PCP SS-1
FS-1 (CR-DW)	DRY WELL LEVEL HIGH	I:0/13	1	13	☐	☐	FROM DRY WELL FLOAT
FS-2 (CR-AL)	FLOAT MODE STOP (LEVEL LOW)	I:0/14	1	14	☐	☐	FROM LOW WET WELL FLOAT
FS-3 (CR-AH)	FLOAT MODE START (HIGH LEVEL)	I:0/15	1	15	☐	☐	FROM HIGH WET WELL FLOAT
SS-3A	PUMP 2 IN HAND MODE	I:1/0	2	0	☐	☐	FROM PCP PUMP 2 H-O-A
SS-3B	PUMP 2 IN AUTO MODE	I:1/1	2	1	☐	☐	FROM PCP PUMP 2 H-O-A
TSH-201	PUMP 2 MOTOR WINDING HIGH TEMPERATURE	I:1/2	2	2	☐	☐	FROM PCP MOTOR CONNECTION
SFR-201	PUMP 2 SEAL FAIL	I:1/3	2	3	☐	☐	FROM SEAL MONITOR RELAY
ZSX-201	PUMP 2 PUMP CHECK VALVE STATUS	I:1/4	2	4	☐	☐	FROM CHECK VALVE PLC INPUT

TAG #	Description	Address	Slot	Point	FAT	N/A	Remarks
LPB-2	PUMP 2 PUMP FAIL RESET	I:1/5	2	5	☐	☐	FROM PCP LPB-2
MIR-101A	PUMP 2 RUNNING	I:1/6	2	6	☐	☐	FROM PUMP 2 VFD
MIF-101A	PUMP 2 FAULT	I:1/7	2	7	☐	☐	FROM PUMP 2 VFD
SS-2	PUMP 2 REMOTE POSITION	I:1/10	2	10	☐	☐	FROM PUMP 2 STARTER SWITCH
GR-1	GENERATOR RUN	I:1/11	2	11	☐	☐	FROM GENERATOR
GF-1	GENERATOR COMMON FAULT	I:1/12	2	12	☐	☐	FROM GENERATOR
CR-PFR	LOSS OF CONTROL POWER	I:1/13	2	13	☐	☐	FROM PCP CONTROL POWER RELAY
UV-101	LOSS OF STATIONPOWER	I:1/14	2	14	☐	☐	FROM TRANSFER SWITCH 3 PHASE POWER LOSS
XFR-101	TRANSFER SWITCH POSITION	I:1/15	2	15	☐	☐	FROM TRANSFER SWITCH
SS-4A	PUMP 1 IN VFD MODE	I:2/0	3	0	☐	☐	FROM PCP PUMP 1 VFD-BYPASS
SS-4B	PUMP 2 IN VFD MODE	I:2/1	3	1	☐	☐	FROM PCP PUMP 2 VFD-BYPASS
	DISCRETE OUTPUT♦						**DISCRETE OUTPUT**
MC-101C	PUMP 1 PUMP REQUIRED	O:0/0	4	0	☐	☐	TO PCP (REQUIRED PL-8) & CR-1
MI-101A	PUMP 1 RUNNING	O:0/1	4	1	☐	☐	TO PCP (RUNNING PL-9) & TO SCADA
MF-101A	PUMP 1 FAULT/LOCKOUT	O:0/2	4	2	☐	☐	TO PCP (FAILED LPB-1) & ALARM TO SCADA
TSH-101	PUMP 1 OVER TEMPERATURE	O:0/3	4	3	☐	☐	TO PCP (OVER TEMP PL-5)
SFM-1	PUMP 1 SEAL FAIL	O:0/4	4	4	☐	☐	TO PCP (SEAL FAIL PL-4)
MF-101B	PUMP 1 ALARM	O:0/5	4	5	☐	☐	FROM PCP ALARM TO SCADA
NF-110	PLC FAIL	O:0/6	4	6	☐	☐	FROM PCP ALARM TO SCADA
SPARE	SPARE	O:0/7	4	7			
UV-110	POWER FAIL	O:0/8	4	8	☐	☐	FROM PCP ALARM TO SCADA
LSH-101	FLOAT MODE STOP	O:0/9	4	9	☐	☐	FROM PCP ALARM TO SCADA
LSL-101	FLOAT MODE START	O:0/10	4	10	☐	☐	FROM PCP ALARM TO SCADA
MC-201C	PUMP 2 PUMP REQUIRED	O:1/0	5	0	☐	☐	TO PCP (REQUIRED PL-10) & CR-2

TAG #	Description	Address	Slot	Point	FAT	N/A	Remarks
MI-201A	PUMP 2 RUNNING	O:1/1	5	1	☐	☐	TO PCP (RUNNING PL-11) & TO SCADA
MF-201A	PUMP 2 FAULT/LOCKOUT	O:1/2	5	2	☐	☐	TO PCP (FAILED LPB-2) & ALARM TO SCADA
TSH-201	PUMP 2 OVER TEMPERATURE	O:1/3	5	3	☐	☐	TO PCP (OVER TEMP PL-7)
SFM-2	PUMP 2 SEAL FAIL	O:1/4	5	4	☐	☐	TO PCP (SEAL FAIL PL-6)
MF-201B	PUMP 2 ALARM	O:1/5	5	5	☐	☐	FROM PCP ALARM TO SCADA
GR-1	GENERATOR RUN	O:1/6	5	6	☐	☐	ALARM TO SCADA
GF-1	GENERATOR FAIL	O:1/7	5	7	☐	☐	ALARM TO SCADA
XFR-101	ATS EMERGENCY POSITION	O:1/8	5	8	☐	☐	ALARM TO SCADA
♦ If the PLC operational program has not been installed, the CSI shall simulate each discrete output at the PLC terminal.							
	ANALOG INPUT						**ANALOG INPUT**
LI-100	WET WELL LEVEL	I:3/0	6	0	☐	☐	FROM LE/LT-100
PI-200	FORCE MAIN PRESSURE	I:3/0	6	1	☐	☐	FROM PE/PT-200
PUMP-1SA	PUMP 1 SPEED FEEDBACK	I:3/0	6	2	☐	☐	FROM PUMP 1 VFD
PUMP-2SA	PUMP 2 SPEED FEEDBACK	I:3/0	6	3	☐	☐	FROM PUMP 2 VFD
	ANALOG OUTPUT♦♦						**ANALOG OUTPUT**
PUMP-1C	PUMP 1 LOAD CURRENT	O:4/0	8	0	☐	☐	TO SCADA (VALUE TO BE DETERMINED)
PUMP-2C	PUMP 2 LOAD CURRENT	O:4/1	8	1	☐	☐	TO SCADA (VALUE TO BE DETERMINED)
PUMP-1SA	PUMP 1 SPEED FEEDBACK	O:4/2	8	2	☐	☐	SPEED FEEDBACK TO SCADA
PUMP-2SA	PUMP 2 SPEED FEEDBACK	O:4/3	8	3	☐	☐	SPEED FEEDBACK TO SCADA
PUMP-1SB	PUMP 1 SPEED CONTROL	O:4/4	8	4	☐	☐	TO PUMP 1 VFD
PUMP-2SB	PUMP 2 SPEED CONTROL	O:4/5	8	5	☐	☐	TO PUMP 2 VFD
♦ If the PLC operational program has not been installed, the CSI shall test each analog circuit through to its corresponding field device by disconnecting the cables which are attached at the PLC terminals and attaching a loop simulator to those cables to vary the signal.							

Inspection Date: _____

_____
CSI Signature:

_____
Contractor's Signature:

_____
Printed Name

_____
Printed Name

NOTES:

SITE ACCEPTANCE TEST (SAT)
CHECK LIST FOR
FOR
SANITARY PUMP STATIONS

Project Name: _____

Project Address: _____

Test Type (Un-Witnessed / Witnessed): _____

Engineer of Record: _____

Phone: _____ Fax: _____ E-mail: _____

TEST PASSED?: YES ☐ NO ☐

****

This Check List shall be completed and given to the City by the Systems Integrator prior to requesting a Witnessed SAT. The Check List shall also be used by the SAT Witness. It is the responsibility of the Engineer of Record and the Contractor to ensure that the Pump Station instrumentation and controls complies with the plans and specifications and all governing regulations. Any item response indicating "NO" shall be repaired or replaced at no cost to the City. The Contractor shall submit a letter to the Department stating that all items with a "NO" have been repaired before the Witnessed SAT is called for.

****

I. PUMP CONTROL SYSTEM

		Yes	No	N/A
1.	Approved Shop drawings are onsite for the Pump Control Panel and Motor Control Panels.	☐	☐	☐
2.	Spare parts are on-site (at the pump station) and have been inventoried by the I&C Engineer	☐	☐	☐
3.	Pump Control Panel and Motor Control Panels have been installed at the station and wiring terminations (control and power) are completed and verified	☐	☐	☐
4.	All control wires are pulled, labeled, connected, tested, and verified.	☐	☐	☐
5.	All network cables are pulled, labeled, connected, and connections tested.	☐	☐	☐
6.	All network devices are installed and connected.	☐	☐	☐
7.	All Instruments (Level Transducer, Station Pressure Transmitter, Gauges etc.) are field calibrated and ranges verified.	☐	☐	☐

		Yes	No	N/A
8.	Operational PLC program is downloaded to the PLC and in operation.	☐	☐	☐
9.	Operational OIT program is downloaded to the OIT and in operation.	☐	☐	☐
10.	Test the communications between the PLC and I/O modules, PLC and Motor Control Communication Modules, and PLC and OIT. Verify proper functionality of the communication network and immunity to outside electrical noise.	☐	☐	☐
11.	Test all PLC I/O loops from the end element to the to the PLC I/O point and to the respective OIT display. Include instruments, control devices, panels, termination cabinets, I/O devices, and other devices in the loop to ensure proper operation and linkage to the PLC and OIT. Test all points as detailed in the PLC I/O Checklist in Section III.	☐	☐	☐
12.	Test all Motor Control Panel controls (remote and local) to verify proper operation of the Pump Control System.	☐	☐	☐
13.	Test all PLC controls (automatic and manual) and to verify proper operation of the Pump Control System.	☐	☐	☐
14.	Test the PLC battery backup in the event of a loss of power.	☐	☐	☐
15.	Generator and ATS have been tested and approved for use.	☐	☐	☐
16.	Pumps have been tested and approved for use.	☐	☐	☐
17.	Test the following alarms to ensure PLC alarm logic is functioning and alarms display on the OIT.			
	1. Pump 1 Running……...	☐	☐	☐
	2. Pump 1 Over Temperature Alarm……	☐	☐	☐
	3. Pump 1 Seal Fail Alarm……...	☐	☐	☐
	4. Pump 1 Flow Fail Alarm……..	☐	☐	☐
	5. Pump 1 Fault Alarm……	☐	☐	☐
	6. Pump 1 H-O-A Off Position Alarm……	☐	☐	☐
	7. Pump 1 “Locked Out” from HMI Screen Push Button……	☐	☐	☐
	8. Pump 1 Fail To Run Alarm……..	☐	☐	☐
	9. Pump 1 Fail/Lockout……	☐	☐	☐
	10. Pump 2 Running……...	☐	☐	☐
	11. Pump 2 Over Temperature Alarm……	☐	☐	☐
	12. Pump 2 Seal Fail Alarm……...	☐	☐	☐
	13. Pump 2 Flow Fail Alarm……..	☐	☐	☐

		Yes	No	N/A
	14. Pump 2 Fault Alarm……	☐	☐	☐
	15. Pump 2 H-O-A Off Position Alarm……..	☐	☐	☐
	16. Pump 2 "Locked Out" from HMI Screen Push Button……	☐	☐	☐
	17. Pump 2 Fail To Run Alarm……..	☐	☐	☐
	18. Pump 2 Fail/Lockout……	☐	☐	☐
	19. Wet Well High Level (From Level Transducer)……..	☐	☐	☐
	20. Wet Well Low Level (From Level Transducer)……..	☐	☐	☐
	21. Wet Well High Float Level (Float Mode Start)……	☐	☐	☐
	22. Wet Well Low Float Level (Float Mode Stop)…….	☐	☐	☐
	23. Wet Well Level Sensor Failure……	☐	☐	☐
	24. Loss of Control Power Alarm……...	☐	☐	☐
	25. Station Power Fail Alarm……	☐	☐	☐
	26. Generator Running Status……	☐	☐	☐
	27. Generator Fault Alarm…….	☐	☐	☐
	28. ATS In Emergency Position Alarm…….	☐	☐	☐
	29. Dry Well Flood Alarm……	☐	☐	☐
	30. PLC Fail Alarm……	☐	☐	☐

II. SCADA

(Verify that all Alarms and Indicators function at both the Station and the Department Operations Center.)

		YES	NO	N/A
1.	Telog Panel has been installed at the station and wiring terminations (control and power) are completed and verified.	☐	☐	☐
2.	Verify that Telog system operational and the signals are being received at Department's Operation Center. Telog system has been inspected and approved for use by the Department's Consultant.	☐	☐	☐
3.	Test the following alarms, status signals, and analog signals are being communicated to the Telog system and the Department's Operation Center.			
	1. Pump 1 Running……...	☐	☐	☐
	2. Pump 1 Fail/Lockout…….…...	☐	☐	☐

		YES	NO	N/A
	3. Pump 1 Fault Alarm…….	☐	☐	☐
	4. Pump 2 Running……...	☐	☐	☐
	5. Pump 2 Fail/Lockout……	☐	☐	☐
	6. Pump 2 Fault Alarm…….	☐	☐	☐
	7. PLC Fail…….....	☐	☐	☐
	8. Station Power Fail……	☐	☐	☐
	9. Float Mode Stop (Low Float Switch) ……..	☐	☐	☐
	10. Float Mode Start (High Float Switch) …….	☐	☐	☐
	11. Pump 2 Over Temperature Alarm……	☐	☐	☐
	12. Generator Running Alarm….……...	☐	☐	☐
	13. Generator Fault Alarm……...……...	☐	☐	☐
	14. ATS Emergency Position……..……...	☐	☐	☐
	15. Dry Well Flood…….	☐	☐	☐
	16. High Wet Well Level……	☐	☐	☐
	17. Pump 1 Amperage……	☐	☐	☐
	18. Pump 2 Amperage……	☐	☐	☐

III. PLC I/O CHECKLIST

TAG #	Description	Address	Slot	Point	FAT	N/A	Remarks
SS-2A	PUMP 1 IN HAND MODE	I:0/0	1	0	☐	☐	FROM PCP PUMP 1 H-O-A
SS-2B	PUMP 1 IN AUTO MODE	I:0/1	1	1	☐	☐	FROM PCP PUMP 1 H-O-A
TSH-101	PUMP 1 MOTOR WINDING HIGH TEMPERATURE	I:0/2	1	2	☐	☐	FROM PCP MOTOR CONNECTION
SFR-101	PUMP 1 SEAL FAIL	I:0/3	1	3	☐	☐	FROM SEAL MONITOR RELAY
ZSX-101	PUMP 1 PUMP CHECK VALVE STATUS	I:0/4	1	4	☐	☐	FROM CHECK VALVE PLC INPUT
LPB-1	PUMP 1 PUMP FAIL RESET	I:0/5	1	5	☐	☐	FROM PCP LPB-1
MIR-101A	PUMP 1 RUNNING	I:0/6	1	6	☐	☐	FROM PUMP 1 VFD
MIF-101A	PUMP 1 FAULT	I:0/7	1	7	☐	☐	FROM PUMP 1 VFD
SS-1	PUMP 1 REMOTE POSITION	I:0/10	1	10	☐	☐	FROM PUMP 1 STARTER SWITCH
SS-1A	LEAD LAG PUMP SELECTION 1-2	I:0/11	1	11	☐	☐	FROM PCP SS-1
SS-1B	LEAD LAG PUMP SELECTION 2-1	I:0/12	1	12	☐	☐	FROM PCP SS-1
FS-1 (CR-DW)	DRY WELL LEVEL HIGH	I:0/13	1	13	☐	☐	FROM DRY WELL FLOAT
FS-2 (CR-AL)	FLOAT MODE STOP (LEVEL LOW)	I:0/14	1	14	☐	☐	FROM LOW WET WELL FLOAT
FS-3 (CR-AH)	FLOAT MODE START (HIGH LEVEL)	I:0/15	1	15	☐	☐	FROM HIGH WET WELL FLOAT
SS-3A	PUMP 2 IN HAND MODE	I:1/0	2	0	☐	☐	FROM PCP PUMP 2 H-O-A
SS-3B	PUMP 2 IN AUTO MODE	I:1/1	2	1	☐	☐	FROM PCP PUMP 2 H-O-A
TSH-201	PUMP 2 MOTOR WINDING HIGH TEMPERATURE	I:1/2	2	2	☐	☐	FROM PCP MOTOR CONNECTION
SFR-201	PUMP 2 SEAL FAIL	I:1/3	2	3	☐	☐	FROM SEAL MONITOR RELAY
ZSX-201	PUMP 2 PUMP CHECK VALVE STATUS	I:1/4	2	4	☐	☐	FROM CHECK VALVE PLC INPUT

TAG #	Description	Address	Slot	Point	FAT	N/A	Remarks
LPB-2	PUMP 2 PUMP FAIL RESET	I:1/5	2	5	☐	☐	FROM PCP LPB-2
MIR-101A	PUMP 2 RUNNING	I:1/6	2	6	☐	☐	FROM PUMP 2 VFD
MIF-101A	PUMP 2 FAULT	I:1/7	2	7	☐	☐	FROM PUMP 2 VFD
SS-2	PUMP 2 REMOTE POSITION	I:1/10	2	10	☐	☐	FROM PUMP 2 STARTER SWITCH
GR-1	GENERATOR RUN	I:1/11	2	11	☐	☐	FROM GENERATOR
GF-1	GENERATOR COMMON FAULT	I:1/12	2	12	☐	☐	FROM GENERATOR
CR-PFR	LOSS OF CONTROL POWER	I:1/13	2	13	☐	☐	FROM PCP CONTROL POWER RELAY
UV-101	LOSS OF STATIONPOWER	I:1/14	2	14	☐	☐	FROM TRANSFER SWITCH 3 PHASE POWER LOSS
XFR-101	TRANSFER SWITCH POSITION	I:1/15	2	15	☐	☐	FROM TRANSFER SWITCH
SS-4A	PUMP 1 IN VFD MODE	I:2/0	3	0	☐	☐	FROM PCP PUMP 1 VFD-BYPASS
SS-4B	PUMP 2 IN VFD MODE	I:2/1	3	1	☐	☐	FROM PCP PUMP 2 VFD-BYPASS
	DISCRETE OUTPUT						**DISCRETE OUTPUT**
MC-101C	PUMP 1 PUMP REQUIRED	O:0/0	4	0	☐	☐	TO PCP (REQUIRED PL-8) & CR-1
MI-101A	PUMP 1 RUNNING	O:0/1	4	1	☐	☐	TO PCP (RUNNING PL-9) & TO SCADA
MF-101A	PUMP 1 FAULT/LOCKOUT	O:0/2	4	2	☐	☐	TO PCP (FAILED LPB-1) & ALARM TO SCADA
TSH-101	PUMP 1 OVER TEMPERATURE	O:0/3	4	3	☐	☐	TO PCP (OVER TEMP PL-5)
SFM-1	PUMP 1 SEAL FAIL	O:0/4	4	4	☐	☐	TO PCP (SEAL FAIL PL-4)
MF-101B	PUMP 1 ALARM	O:0/5	4	5	☐	☐	FROM PCP ALARM TO SCADA
NF-110	PLC FAIL	O:0/6	4	6	☐	☐	FROM PCP ALARM TO SCADA
SPARE	SPARE	O:0/7	4	7			
UV-110	POWER FAIL	O:0/8	4	8	☐	☐	FROM PCP ALARM TO SCADA
LSH-101	FLOAT MODE STOP	O:0/9	4	9	☐	☐	FROM PCP ALARM TO SCADA
LSL-101	FLOAT MODE START	O:0/10	4	10	☐	☐	FROM PCP ALARM TO SCADA

TAG #	Description	Address	Slot	Point	FAT	N/A	Remarks
MC-201C	PUMP 2 PUMP REQUIRED	O:1/0	5	0	☐	☐	TO PCP (REQUIRED PL-10) & CR-2
MI-201A	PUMP 2 RUNNING	O:1/1	5	1	☐	☐	TO PCP (RUNNING PL-11) & TO SCADA
MF-201A	PUMP 2 FAULT/LOCKOUT	O:1/2	5	2	☐	☐	TO PCP (FAILED LPB-2) & ALARM TO SCADA
TSH-201	PUMP 2 OVER TEMPERATURE	O:1/3	5	3	☐	☐	TO PCP (OVER TEMP PL-7)
SFM-2	PUMP 2 SEAL FAIL	O:1/4	5	4	☐	☐	TO PCP (SEAL FAIL PL-6)
MF-201B	PUMP 2 ALARM	O:1/5	5	5	☐	☐	FROM PCP ALARM TO SCADA
GR-1	GENERATOR RUN	O:1/6	5	6	☐	☐	ALARM TO SCADA
GF-1	GENERATOR FAIL	O:1/7	5	7	☐	☐	ALARM TO SCADA
XFR-101	ATS EMERGENCY POSITION	O:1/8	5	8	☐	☐	ALARM TO SCADA
	ANALOG INPUT						**ANALOG INPUT**
LI-100	WET WELL LEVEL	I:3/0	6	0	☐	☐	FROM LE/LT-100
PI-200	FORCE MAIN PRESSURE	I:3/0	6	1	☐	☐	FROM PE/PT-200
PUMP-1SA	PUMP 1 SPEED FEEDBACK	I:3/0	6	2	☐	☐	FROM PUMP 1 VFD
PUMP-2SA	PUMP 2 SPEED FEEDBACK	I:3/0	6	3	☐	☐	FROM PUMP 2 VFD
	ANALOG OUTPUT						**ANALOG OUTPUT**
PUMP-1C	PUMP 1 LOAD CURRENT	O:4/0	8	0	☐	☐	TO SCADA (VALUE TO BE DETERMINED)
PUMP-2C	PUMP 2 LOAD CURRENT	O:4/1	8	1	☐	☐	TO SCADA (VALUE TO BE DETERMINED)
PUMP-1SA	PUMP 1 SPEED FEEDBACK	O:4/2	8	2	☐	☐	SPEED FEEDBACK TO SCADA
PUMP-2SA	PUMP 2 SPEED FEEDBACK	O:4/3	8	3	☐	☐	SPEED FEEDBACK TO SCADA
PUMP-1SB	PUMP 1 SPEED CONTROL	O:4/4	8	4	☐	☐	TO PUMP 1 VFD
PUMP-2SB	PUMP 2 SPEED CONTROL	O:4/5	8	5	☐	☐	TO PUMP 2 VFD

City Inspector:_____

Witness Signature: _____

Inspection Date: _____

_____	_____
EOR's Signature:	**Contractor's Signature:**
_____	_____
Printed Name	Printed Name

NOTES:

_____

_____

_____

_____

_____

START-UP CHECK LIST
for
SANITARY PUMP STATIONS

Project Name: _____

Project Address: _____

Developer: _____

Engineer of Record: _____

Phone: _____ Fax: _____ E-mail: _____

Plan Preparer Signature: _____ Date: _____

DPU File #:_____ Submittal # (Circle): 1 2 3 4 5

ACCEPTED: YES ☐ NO ☐
****
Note: This Check List shall be completed by the City of Suffolk Department of Public Utilities (Department) Inspector prior to approving a Pumping Station for City ownership. The Check List shall be signed by the EOR, Contractor and City Inspector. It is the responsibility of the EOR and Contractor to ensure that the Pumping Station complies with the plans and specifications and all governing regulations. Any item response indicating "NO" shall be repaired, at no cost to the City. The EOR/Contractor shall submit a letter to the DPU stating the all items with a "NO" have been repaired before a re-inspection is performed.
****

I. PUMP STATION BUILDING

		Yes	No	N/A
1.	All windows and doors (including access doors) operate correctly.	☐	☐	☐
2.	Threshold has been sealed to keep water out.	☐	☐	☐
3.	Exterior door locks are keyed to the City standard.	☐	☐	☐
4.	Building ventilation system is operational.	☐	☐	☐
5.	Control Room fan comes on and runs until one air change has occurred.	☐	☐	☐
6.	Control Room ventilation system is operational.	☐	☐	☐
7.	Dry Well (if applicable) ventilation system is interlocked with Dry Well lights and is operational	☐	☐	☐

		Yes	No	N/A
8.	Heating system is operational.	☐	☐	☐
9.	Thermostat(s) installed as required and operating properly.	☐	☐	☐
10.	Heaters and ventilation fans are installed and operating properly in conjunction with thermostats.	☐	☐	☐
11.	All light fixtures and lamps are operating correctly, including exterior photocell.	☐	☐	☐
12.	Emergency Exit lighting comes on during a power failure.	☐	☐	☐
13.	All wall outlets have power.	☐	☐	☐
14.	All final trim has been installed.	☐	☐	☐
15.	All painting, interior and exterior, is complete.	☐	☐	☐
16.	Wet Well lining has been applied as required.	☐	☐	☐
17.	All items installed in the Wet well are Type 316L stainless steel or aluminum.	☐	☐	☐
18.	All handrailing is installed in accordance with the contract drawings.	☐	☐	☐
19.	All safety equipment (eye wash, shower, gas masks, etc.) and warning signs are installed.	☐	☐	☐
20.	All sump pumps are installed and operating properly.	☐	☐	☐
12.	Cranes and hoists are installed. Name plate date matches specifications.	☐	☐	☐
21.	Cranes and hoist operate and operation range (horizontal and vertical) matches specifications.	☐	☐	☐
22.	Wet well is clean and all debris has been removed.	☐	☐	☐
23.	The building is clean and neat and all construction debris has been removed.	☐	☐	☐
24.	Concrete splash pads are installed where gutters and downspouts are provided.	☐	☐	☐

II. MECHANICAL

		Yes	No	N/A
1.	All mechanical equipment specified has been installed properly and anchored. All nuts and bolts are tight and properly torqued.	☐	☐	☐
2.	Influent wetwell gate valves are installed and operational.	☐	☐	☐
3.	Wet well level sensing transducer has been properly installed and controls adjusted for operating levels as specified.	☐	☐	☐

4.	Transducer stilling well is installed in accordance with contract drawings.	☐	☐	☐
5.	Floats are installed at the specified elevations.	☐	☐	☐

III. PIPING and VALVES

		Yes	No	N/A
1.	Pressure and leak test results for all piping has been performed in accordance with the Contract Documents and the results submitted. (If tested in sections, the results for each section must be submitted.) Results from all pressure and leakage tests, even failed tests, have been provided.	☐	☐	☐
2.	If there are failed tests, a narrative describing the repairs made has been submitted prior to retesting.	☐	☐	☐
3.	Proximity switches have been tested and are operation.	☐	☐	☐
4.	Valve springs or lever weights are properly adjusted. Dash pots are properly timed.	☐	☐	☐
5.	Pump control or check valves are operational and timed or adjusted as specified.	☐	☐	☐
6.	Pipe supports are properly installed and strain in the equipment has been eliminated.	☐	☐	☐
7.	Piping is level or continuously rising to prevent formation of air pockets and there is no strain in the piping.	☐	☐	☐
8.	Valves are installed in the proper flow direction.	☐	☐	☐
9.	Valves have been operated - open left (counter clockwise) - and are open.	☐	☐	☐
10.	Harness bolts are properly installed in sleeve connections.	☐	☐	☐
11.	Hose bibs are located inside the station.	☐	☐	☐

IV. PUMPS AND MOTORS

		Yes	No	N/A
1.	Motor name plate data agrees with the Contract Documents or Submittals.	☐	☐	☐
2.	The equipment has been lubricated in accordance with the specifications.	☐	☐	☐
3.	Wiring connections are tight.	☐	☐	☐

4.	Variable Speed Units: Manufacturer's representative **must** be on-site for start-up.	☐	☐	☐
5.	Pumps are level and there is no strain in the pump casing.	☐	☐	☐
6.	Manufacturer's representative has inspected and certified pump installation and operation.	☐	☐	☐
7.	Spare pump has been provided.	☐	☐	☐

	For Dry Pit Submersible Pumps	**Yes**	**No**	**N/A**
8.	Rotation arrow on pump is in place and correct. (Relate arrow to the direction of the pump discharge nozzle.)	☐	☐	☐
9.	Pump support and pump are level and plumb.	☐	☐	☐
10.	Oil is at the proper level in the rotating assembly.	☐	☐	☐
	For Submersible Pumps			
11.	Slide rails are properly installed. If depth exceeds 20 ft., a midrail guide is installed.	☐	☐	☐
12.	Pumps seat accurately.	☐	☐	☐
13.	Lifting device is operational. Lifting chain can be securely fastened at the access door.	☐	☐	☐
14.	Oil is at the proper level in the rotating assembly.	☐	☐	☐
15.	There are **no** electrical connections, splices or junction boxes in the wet well, where applicable.	☐	☐	☐
16.	The pumps and motors have been operated and all controls and alarms are operational.	☐	☐	☐

V. EMERGENCY GENERATOR

		Yes	**No**	**N/A**
1.	Engine is properly filled with oil and radiator (if applicable) is filled with antifreeze.	☐	☐	☐
2.	Manually test automatic transfer switch.	☐	☐	☐
3.	Test for correct voltage range for both primary and alternate power source have been performed and provided.	☐	☐	☐
4.	Generator and transfer switch indicator lights are operational.	☐	☐	☐
5.	Starter batteries are installed as required. Battery trickle charger is installed and operating properly.	☐	☐	☐
6 .	Fuel tank is installed properly and filled. Interstitial sensor and alarm is installed and operating.	☐	☐	☐
7.	Day tank and transfer pump are installed and operating	☐	☐	☐

	properly.			
8.	Fuel piping is installed and pressure tested.	☐	☐	☐
9.	Fuel gauge is operating properly.	☐	☐	☐
10.	All indicating voltage, current and power devices are registering properly.	☐	☐	☐
11.	Ventilation louvers open at the start-up of the generator.	☐	☐	☐

VI. SITE REVIEW

		Yes	No	N/A
1.	All construction debris has been removed from site and properly disposed.	☐	☐	☐
2.	Site has been fine graded to final elevations per drawings.	☐	☐	☐
3.	All landscaping is installed.	☐	☐	☐
4.	Driveway is installed.	☐	☐	☐
5.	All erosion control measures have been removed and an acceptable stand of grass has been established.	☐	☐	☐
6.	All storm drain piping and drop inlets are properly installed and at the contract elevations. Erosion protection is installed at storm drain discharge.	☐	☐	☐
7.	Water meter and backflow preventer are installed and operating.	☐	☐	☐
8.	Site lighting is installed and operational.	☐	☐	☐

VII. GENERAL

		Yes	No	N/A
1.	Record Drawings have been submitted by the Contractor.	☐	☐	☐
2.	All electrical equipment specified has been installed and adjusted by the Manufacturer in accordance with the Specifications.	☐	☐	☐
3.	The Operation and Maintenance Manual is complete in accordance with the Contract Documents.	☐	☐	☐
4.	All test certificates have been provided.	☐	☐	☐

All of the items indicated on the above check list are accurately reflected in the Contract Documents or Record Drawings.

_____
City Inspector's Signature/Date

_____
Typed or Printed Name

_____ _____
EOR Signature/Date: **Contractor's Signature/Date:**

_____ _____
Typed or Printed Name Typed or Printed Name

NOTES:

_____

_____

_____

_____

_____

_____

_____

_____

_____

_____

_____

_____

STAND-BY POWER GENERATOR
START-UP CHECK LIST

Project Name: _____

Project Address: _____

Contractor: _____

Architect/Engineer: _____

Phone: _____ Fax: _____ E-mail: _____

DPU File #:_____ Submittal # (Circle): 1 2 3 4 5

ACCEPTED By DPU: YES NO

****

Note: This Check List shall be completed by the Generator Supplier prior to accepting a stand-by power generator for City ownership. The Check List shall be signed by the Contractor, Generator Supplier Representative, and City Inspector. It is the responsibility of the Contractor and the Generator Supplier Representative to ensure that the stand-by power generator complies with the plans and specifications and all governing regulations.

****

I. GENERATOR/ENGINE DATA

Generator Make: _____

Generator Model: _____ Spec. #: _____

Generator Serial No: _____ Kw: _____

Engine Make: _____

Engine Model: _____ CPL. #: _____

Engine Serial No.: _____ Hp: _____

Fuel Type: _____

Automatic Transfer Switch (ATS) Make: _____

ATS Model: _____ Spec. #: _____

ATS Serial No.: _____ Amps: _____

Type of Installation: _____

II. INITIAL INSTALLATION & PRESTART CHECKS

		Yes	No	N/A
1.	LUBRICATION AND FILTRATION			
	Add Engine Lube Oil & Check Level	☐	☐	☐
	Service Air Cleaner	☐	☐	☐
	Oil Filter Installed	☐	☐	☐
	Coolant Filter Installed	☐	☐	☐
	Governor Linkage	☐	☐	☐
2.	FUEL SYSTEM			
	Natural Gas & LP	☐	☐	☐
	Manual Shut-off valve	☐	☐	☐
	Primary Natural Gas Pressure Regulator	☐	☐	☐
	Natural Gas Volume Surge Tank	☐	☐	☐
	Dry Fuel Strainer	☐	☐	☐
	Natural Gas Solenoid Valve	☐	☐	☐
	Flexible Fuel Connection	☐	☐	☐
	Natural Gas Available	☐	☐	☐
	Diesel	☐	☐	☐
	Flexible Diesel Fuel Connection (Supply & Return)	☐	☐	☐
	Day Tank (Installed Below Diesel Fuel Pump & Injectors)	☐	☐	☐
	Diesel Fuel Transfer Pump	☐	☐	☐
	Day Tank Float Switch Wired to Diesel Fuel Transfer Pump (A.C. or	☐	☐	☐
	Diesel Fuel Return Line to Main Tank One Size larger	☐	☐	☐
	Diesel Fuel Solenoid Valve (if required)	☐	☐	☐
	Diesel Fuel Available	☐	☐	☐

		Yes	No	N/A
	Bleed Diesel Fuel	☐	☐	☐
3.	EXHAUST SYSTEM			
	Exhaust Condensation Trap	☐	☐	☐
	Muffler	☐	☐	☐
	Correct Exhaust Piping Size	☐	☐	☐
	Long Radius Exhaust Elbows	☐	☐	☐
	Exhaust Thimble	☐	☐	☐
4.	COOLING SYSTEM			
	Radiator Cooling			
	Add Coolant, Antifreeze & Check Level (Check DCA on	☐	☐	☐
	Proper Exhaust Ventilation Duct & Opening	☐	☐	☐
	Proper Inlet Ventilation Opening	☐	☐	☐
	Proper Air Circulation	☐	☐	☐
	Water Cooling			
	O Standpipe O Heat Exchanger O Direct	☐	☐	☐
	Flexible Water Lines	☐	☐	☐
	Water Solenoid valve	☐	☐	☐
	Water Strainer	☐	☐	☐
5.	MOUNTING & ALIGNMENT			
	Water Available	☐	☐	☐
	Secured to Level Surface	☐	☐	☐
	Oil Drainage Clearance	☐	☐	☐
	Vibration Isolation installed Correctly	☐	☐	☐
6.	ENGINE			
	Choke Set for Fuel Used	☐	☐	☐
	Inspect Belts, Fan Alternator & Governor	☐	☐	☐
7.	BATTERY			
	Proper Battery Size & Voltage	☐	☐	☐
	Electrolyte Level	☐	☐	☐
	Correct Polarity	☐	☐	☐
	Isolated from Floor (Batteries not on concrete)	☐	☐	☐

		Yes	No	N/A
8.	ELECTRICAL			
	Engine Water Jacket Heater Wired to Normal Source	☐	☐	☐
	Engine Water Jacket Heater Wired for Correct Voltage _____	☐	☐	☐
	Engine Water Jacket Heater Operational	☐	☐	☐
	Fuel Solenoid Valve Wired to Ignition System	☐	☐	☐
	Remote Start Wiring to Transfer Switch	☐	☐	☐
	Generator Set Control Operation Selector Switch to Proper Position	☐	☐	☐
	Generator Output Connections Proper for Desired Voltage	☐	☐	☐
	Automatic Voltage Regulator Installed for Correct Frequency and Generator Output Voltage	☐	☐	☐
	Generator Set Control Jumpers and Adjustments per Customer Requirements	☐	☐	☐
	Is Plant Grounded? Where:	☐	☐	☐
9.	AUTOMATIC LOAD TRANSFER SWITCH			
	Remote Start Wiring to Engine/Generator	☐	☐	☐
	Charger Operation & Adjustment	☐	☐	☐
	Correct Wiring Connections to Load, Generator & Normal	☐	☐	☐
	Adjust Time Delay Relays	☐	☐	☐
	TDES _____ TDNE _____ TDEN	☐	☐	☐
	TDEC _____ TDECa _____ TDPT	☐	☐	☐
	Adjust Exerciser Clock Date & Time	☐	☐	☐
	Day _____ Time	☐	☐	☐
	Adjust Exerciser Clock Duration	☐	☐	☐
	Visual Check of Main Contactors	☐	☐	☐
	Contacts Free of metal Chips and Other Debris	☐	☐	☐
10.	GENERAL INSPECTION			
	Wiring	☐	☐	☐
	Hoses	☐	☐	☐
	Clearances	☐	☐	☐
	Supports	☐	☐	☐

APPROVED FOR START-UP

Signature: _____
(Generator Supplier Representative)

III. START-UP & WARM-UP PERIOD (WITHOUT LOAD)

		Yes	No	N/A
1.	FIELD CIRCUIT BREAKER "OFF"			
	Start Engine (Selector Switch in "RUN" Position)	☐	☐	☐
	Oil Pressure _____ lbs.	☐	☐	☐
	Water Temperature _____ °F	☐	☐	☐
	Battery Charge Rate _____ Amps	☐	☐	☐
	Unusual Noises or Vibrations	☐	☐	☐
2.	FIELD CIRCUIT BREAKER "ON"			
	Check Phase Rotation CW O CCW O	☐	☐	☐
	Voltage _____	☐	☐	☐
	Amps _____	☐	☐	☐
	Allow Proper No Load Warm-Up	☐	☐	☐
	Unusual Noises or Vibrations	☐	☐	☐

IV. WARM-UP PERIOD (WITH LOAD)

	Set Selector Switch In "RUN" Position	☐	☐	☐
	Add Load By Simulating Power failure (Open Main Breaker or Use Test Switch in the Automatic Transfer Switch)	☐	☐	☐
1.	ENGINE/GENERATOR			
	Carburetor Adjustments	☐	☐	☐
	Governor Adjustments	☐	☐	☐
	Check for Overload	☐	☐	☐
	Amps: L1 _____ L2 _____ L3 _____	☐	☐	☐
	Voltage _____	☐	☐	☐
	Hertz _____	☐	☐	☐
	Oil Pressure _____ lbs	☐	☐	☐

		Yes	No	N/A
	Water Temperature _____ oF	☐	☐	☐
	Check Low Oil Pressure Safety Switch	☐	☐	☐
	Check High Water Temperature Safety Switch	☐	☐	☐
	Check Engine Overspeed Safety Switch	☐	☐	☐
	Unusual Noises or Vibrations	☐	☐	☐
2.	AUTOMATIC TRANSFER SWITCH			
	Transfer to Emergency Okay	☐	☐	☐
	Time Delays Timed Out Okay	☐	☐	☐
	Remove Load (Close Main Breaker or Use Test Switch on ATS)	☐	☐	☐
	Transfer to Normal Okay	☐	☐	☐
	Shut Down Plant (Selector Switch in “STOP” Position)	☐	☐	☐

V. AUTOMATIC START (MAIN FAILURE TEST)

	Check Oil & Water Levels	☐	☐	☐
	Place Selector Switch in “REMOTE”	☐	☐	☐
	Simulate Power Failure (Open Main Breaker)	☐	☐	☐
1.	ENGINE/GENERATOR			
	Engine Start Okay	☐	☐	☐
	Engine & Generator Under Load Okay	☐	☐	☐
	Unusual Noises or Vibrations	☐	☐	☐
2.	AUTOMATIC TRANSFER SWITCH			
	Transfer to Emergency Okay	☐	☐	☐
	Return Load to Normal (Close Main Breaker)	☐	☐	☐
	Transfer to Normal Okay	☐	☐	☐
	Engine Shut Down Okay	☐	☐	☐
	Time Delays Timed Out Okay	☐	☐	☐

FINAL NOTES AND RECOMMENDATIONS

_____

_____

_____

All of the items indicated on the above check list were performed and were acceptable.

ENGINE/GENERATOR DATE: _____

AUTOMATIC TRANSFER SWITCH: _____

CHECK OUT & START-UP PERFORMED BY: _____

Print Name: _____

COMPANY: _____

City Inspector's Signature: _____

Date: _____

_____	_____
Developer's Signature:	Contractor's Signature:
_____	_____
Typed or Printed Name	Typed or Printed Name
_____	_____
_____	_____
_____	_____
_____	_____
Address	Address

Manuals Accepted By: _____

Print Name: _____

Number of Manuals Received: _____

This page intentionally left blank.

DEFINITIONS

ATS – Automatic Transfer Switch

CSI – Control Systems Integrator

CI&CE – City Instrumentation and Control Engineer

EOR – Engineer of Record

ESD - Electronic Signature Data file (Provided by PLC Manufacturer)

FAT/PRE-SAT/SAT Check Lists – Check Lists used for the Factory Acceptance Test, the Pre-Site Acceptance Test, and the Site Acceptance Test.

I&C – Instrumentation and Control

PFM – Public Facilities Manual Volume II

OIT – Operator Interface Terminal (panel mounted Touchscreen graphic display)
PLC – Programmable Logic Controller

RVSS – Reduced Voltage Solid State

SCADA – Supervisory Control and Data Acquisition

Telog – City of Suffolk SCADA System

VFD – Variable Frequency Drive

Software - Control Systems Software - Programs provided from the manufacturer that run on a programming laptop computer used to interface with the control system hardware and create the application programming.

Configuration Programming - Basic network communication and hardware configuration of the OIT, PLC, VFD, RVSS and other network connected control system devices. This programming shall be completed by the CSI to enable network communications and exchange of data on the network between all devices. PLC configuration shall include Input/Output module configuration and ESD files with firmware revisions compatible between connected devices such as VFD, RVSS

and Current Modules to allow full access of available data points into the processor.

Operator Interface Terminal (OIT) Graphical Application Program – Application program that is created using a manufacturer's software to provide an operational graphical user interface. After the CSI has documented completion of the successful installation and testing of the OIT Configuration Program during the Unwitnessed FAT, they shall forward the OIT Configuration Program files to the City I&C Engineer. The OIT Graphical Application Program will be created by the City's I&C Engineer using the tested and verified OIT configuration files as provided by the CSI. The City I&C Engineer shall provide the OIT Graphical Application Program files to the CSI within two (2) weeks of receiving the OIT Configuration Program files.

Operational Control Logic Application Program – Application program that is created using a manufacturer's software to provide PLC based control and alarms. After the CSI has documented completion of the successful installation and testing of the PLC Configuration Program during the Unwitnessed FAT, they shall forward the PLC Configuration Program files to the City I&C Engineer. The Operational Control Logic Application Program will be created by the City's I&C Engineer using the tested and verified PLC configuration files as provided by the CSI. The City I&C Engineer shall provide the PLC Operational Control Logic Program files to the CSI within two weeks of receiving the PLC Configuration Program files.

It is the EOR's responsibility to coordinate the required personnel at the various stages of pump station acceptance. The individuals indicated as the "Test Director" are responsible for all aspects of the testing including recording test results. The City personnel and their consultants are only observers.

SUBMITTALS APPROVAL

CSI submits I&C shop drawings (prepared in accordance with the PFM I&C Drawings and Specifications) to the Contractor. The Contractor submits the I&C shop drawings to the EOR. The EOR reviews all shop drawings and, in addition, sends the pump motor starter enclosure drawings, control panel layout drawings, control panel wiring diagrams, and control panel bill of materials to the City of Suffolk I&C Engineer for his review and approval. The EOR reviews and approves all other I&C shop drawings. The City of Suffolk I&C Engineer reviews and returns the control panel submittals to the EOR. After receipt of the approved control panel submittals and other I&C shop drawings, the CSI builds the control panel in his factory.

FAT

The test performed by the Control Panel Manufacturer at the CSI's Factory to confirm that the wiring has been completed in the construction of the Control Panel (to the extent possible) and to confirm that all network connected control system devices are communicating with each other properly. The City's I&C Engineer will witness the FAT at the CSI's Factory for approval of the control panel prior to shipment to the Project Site. Successful completion of this test is acknowledged in writing by the

CSI (successfully completed FAT Check List) and is submitted to the EOR for approval after which the control panel may be shipped to the Project Site.
If the FAT is not completed successfully (for Department CIP Projects) on the initial visit by the City I&C Engineer, the Department shall deduct $2,500.00 from any monies owed Contractor for each subsequent visit required by the City's I&C Engineer to complete the FAT.

Generator and Automatic Transfer Switch Start-Up

The generator and transfer switch shall be installed, tested, all signal and power wires terminated, and ready for use prior to scheduling the SAT. It is the EOR's responsibility to coordinate the required personnel to be present for this test:

a. EOR (**Test Director**)
b. CSI
c. Electrical Sub-Contractor
d. Generator/ATS Rep
e. Department Inspector

Pump Start-Up Meeting

The pumps shall be installed, tested, and ready for use prior to scheduling the Pump Start-Up Meeting. The following additional checks shall also have been performed prior to the Pump Start-Up Meeting:

a. Wet well top elevation has been established by the Department (coordinate with the City Inspector).
b. Force main pressure transmitter readout on pump control panel matches mechanical gauge pressure.
c. Wet well transducer readout on pump control panel has been checked against actual wet well level.
d. Float Control and High Water Alarm floats have been set to the correct level.

At the Pump Start-Up Meeting, the Contractor and the Pump Manufacturer's Representative shall perform a field test at the pump station in order to generate a pump performance curve for each installed new pump and prepare a start-up report (to be provided to the EOR). The pump performance curve shall be a plot of total dynamic head (TDH) in feet versus pump discharge flowrate (Q) in gallons per minute. The report shall include a plot of the field generated pump curve relative to the factory pump curve. The report shall also include detailed calculations and values used to develop each operating point (TDH vs. Q) on the pump performance curve.

A minimum of three operating points shall be used to define each pump performance curve:

a. Operating Point No. 1: "Shut-off" head pressure; no flow condition (force main discharge valve fully closed)

b. Operating Point No. 2: Lowest discharge pressure; maximum flow condition (force main discharge valve fully open)

c. Operating Point No. 3: Intermediate discharge pressure; throttled flow condition (force main discharge valve throttled). Q shall be within +/- 20% of the midpoint between maximum flow condition and no flow condition.

For each operating point test, the following data shall be documented:

a. Stabilized discharge pressure (psi)

b. Wet well water level depth at start of test (L_1) (feet)

c. Wet well water level depth at stop of test (L_2) (feet)

d. Time duration of test (t) (min)

The field test calculation of pump TDH for each operating point shall incorporate discharge pressure, wet well level, and applicable elevations and shall be based on the following calculation:

TDH = [(Discharge Pressure (psi) x 2.31) + Pressure Transducer Elevation (feet)] - [Average Wet Well Water Level Elevation (feet)]

Note: Average Wet Well Water Level Elevation = [(L_1 + L_2)/2] + [Wet Well Invert Elevation (feet)]

The field test calculation of Q for each operating point shall be based on the change in wet well volume over the time duration of the test and shall be based on the following calculation:

$$Q = [(L_1 - L_2)\ (feet) \times Wet\ Well\ Area\ (sq.\ feet) \times 7.481\ (gallons/cu.\ feet)] / [t\ (min)]$$

Prior to the drawdown test, the Contractor shall ensure the influent line to the wet well has been isolated and does not surcharge when filling the wet well with water. When performing each operating point test (excluding the “shut-off” head pressure condition), the pump shall be operated for a minimum of one (1) minute (operating at full speed for VFD pump stations) and achieve at a minimum one (1) foot of drawdown in the wet well. Adequate wet well water to perform the drawdown test is the responsibility of the Contractor. It is the EOR’s responsibility to coordinate the required personnel to be present for the Pump Start-Up meeting:

a. EOR (**Test Director**)
b. Contractor’s Representative
c. Department Project Manager
d. Pump Manufacturer’s Representative (**Performs Pump Test**)
e. Department Inspector

Pre-SAT

The CSI shall conduct the Pre-SAT prior to scheduling the SAT. All items listed on the Pre-SAT Check List shall be completed and the completed Check List shall be sent to the Contractor. It is the responsibility of the Contractor to verify that the Pre-SAT requirements have been met and that the pump station is ready for the SAT.

SAT

The EOR shall obtain the following information and send it to the City I&C Engineer and the CSI prior to scheduling the SAT:

1. Pump Station Number
2. Pump Station Name
3. Pump Station Street Address
4. Wet Well Level/Pump Control Set Points
5. Location and elevation of the lowest possible overflow point in the system.

Once the control panel, motor starters, pumps, instrumentation, control wiring, SCADA wiring, generator, transfer switch, etc. installations and Pump Start-Up have been completed by the Contractor and are approved for operation by the EOR, the Pre-SAT Checklist received and approved by the EOR and I&C Engineer and all operations and maintenance manuals have been received and approved by the Department, the EOR will schedule the SAT and the CSI will perform the SAT. If the Contractor notifies the City that the pump station is ready for the SAT and it is determined by the City (at the SAT) that it is, in fact, not ready and requires a rescheduled SAT, the Contractor will be assessed damages commensurate with the City's costs in personnel time to attend the rescheduled SAT.

The Contractor shall provide adequate wet well water to successfully operate all pumps individually and as required combination (i.e. Lead and Lag) through at least one complete cycle for operational testing. The City I&C Engineer will assist the CSI in performing the SAT. The City SCADA Engineer will assist with verifying that all required alerts and alarms are being received by the Telog. The SAT Check List shall be used by the CSI to document required work effort. The CSI will send the successfully completed SAT Check List to the EOR. The EOR sends City of Suffolk Construction Manager, City I&C Engineer and City SCADA Engineer a copy of the successfully completed SAT Check List. If the SAT and/or Telog system tests fail, the EOR will schedule a re-test. It is the EOR's responsibility to coordinate the required personnel to be present for this test and any subsequent re-test:

SAT Personnel Required:

a. CSI (**Test Director**)
b. EOR
c. Department Inspector
d. City I&C Engineer
e. City SCADA Engineer
f. Contractor
g. Electrical Sub-Contractor

Start-Up and Demonstration Test

Upon successful completion of the SAT, the EOR shall notify the Department and all applicable other personnel that the pump station is ready for the Start-Up and Demonstration test.

Start-up and Demonstration Personnel Required

a. EOR (**Test Director**)
b. Department Construction Manager
c. Department Inspector
d. Department Engineer
e. Department PS Maintenance Mechanics
f. CSI
g. City I&C Engineer
h. City SCADA Engineer
i. Contractor

The contractor shall Start-up, test, and demonstrate that all systems work as intended. Appendix B-10, START-UP CHECK LIST for SANITARY PUMP STATIONS shall be completed and signed by the Contractor. The pumps shall be operated and adequate wet well water to perform the testing is the responsibility of the Contractor. The EOR will compile all successful Check Lists and test reports and provide them to the City along with his written acknowledgement that all components of the pump station have been successfully completed in accordance with the approved plans and his recommendation that the pump station be accepted by the City and placed into service. Once the City receives and approves this documentation from the EOR, and ALL pump station punch-list items have been resolved to the satisfaction of the City's Construction Manager, the City will provide a letter of pump station acceptance to the Contractor and accept the pump station into its system. That date will start the pump station warranty period.

Alarm Responsibility

Alarm activation for the Telog system will occur at the City's discretion. Responding to alarm conditions will continue to be the responsibility of the Contractor until the City directs the Telog alarms to be activated and sent to the City Pump Station Mechanic upon pump station acceptance.

Note

The City of Suffolk Department of Public Utilities reserves the right to revise this Pump Station Acceptance Procedure as needed and without prior notification.

See next page for programming flowchart.

City of Suffolk - Programming Flow Chart

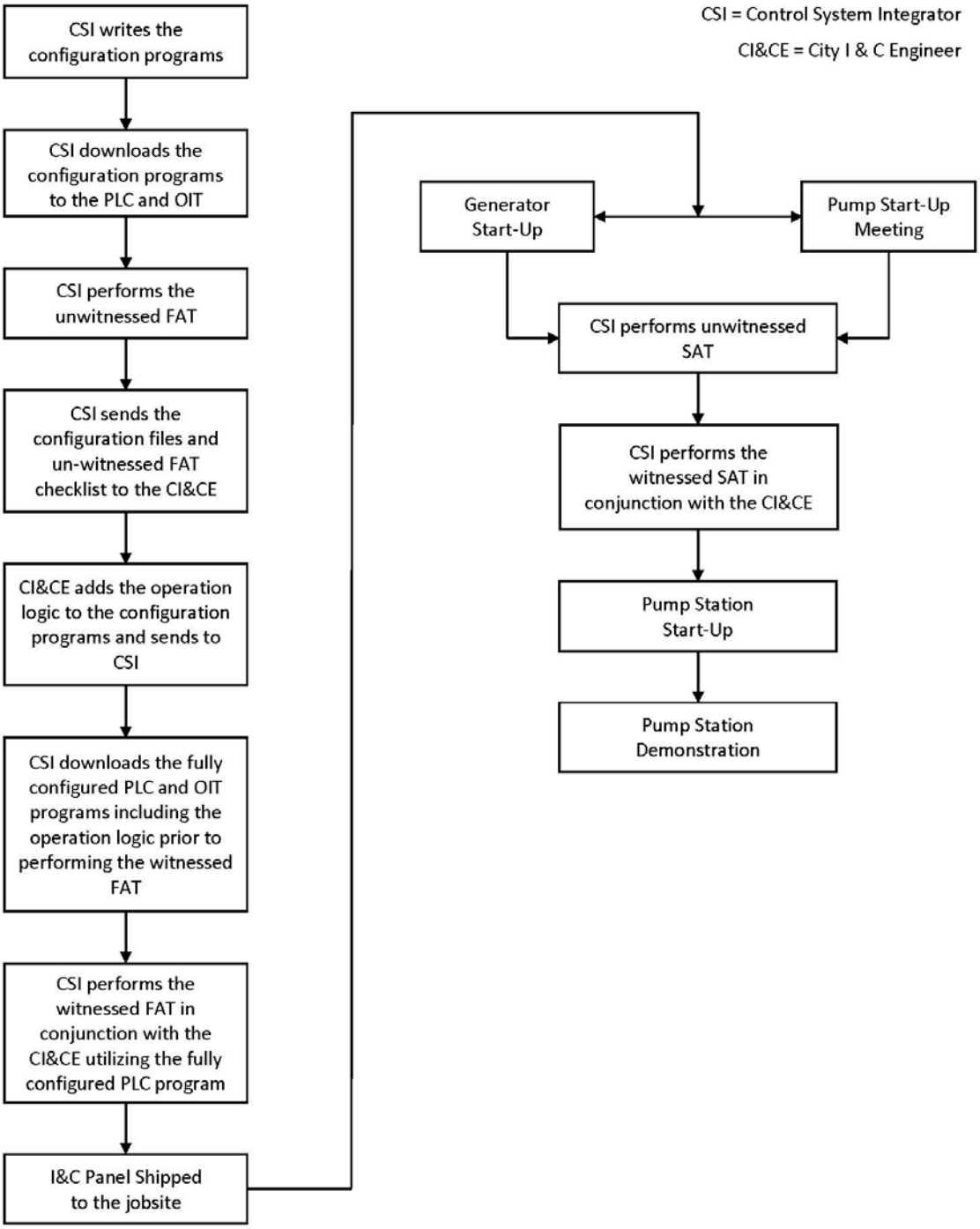

PROJECT NAME:
PLANNING (SP/EP) NUMBER:

DESCRIPTION OF REQUESTED CHANGE

PROBABLE IMPACT:

REFERENCE PLAN SHEET:

SUBMITTING CONSULTANT _____ DATE_____

REVIEWING DEPT. _____AGENT_____ DATE _____

REVIEWING DEPT. _____AGENT_____ DATE _____

REVIEWING DEPT. _____AGENT_____ DATE _____

UTILITIES APPROVAL ☐ YES ☐ NO CONSTR. MGR_____DATE_____

ENG. MGR_____DATE_____

ALL APPROVED CHANGES MUST BE SHOWN ON THE RECORD DRAWINGS

Additional Notes:

APPENDIX C

APPROVED PRODUCTS AND MATERIALS

This page intentionally left blank.

APPENDIX C

APPROVED PRODUCTS AND MATERIALS

Product Selection Committee

The purpose of the committee is to "review existing standards and specifications, review new products and materials for consideration in the utility system, and to test new products and equipment as is necessary."

There will generally be five voting members, two each from the Operations and Engineering Divisions, and the Assistant Director, who will serve as committee chairman. Other members may be called to participate when their expertise and/or input is needed.

Submittal Procedures

All requests for approvals for new products or procedures shall be directed to the Chairman of the Product Selection Committee at the following address:

Chairman, Product Selection Committee
Utilities Engineering Division
442 W. Washington Street
Suffolk, Virginia 23434

Applications should include:

- Letter naming the submitter, the manufacturer, the product or process requested for approval, and if not readily apparent, the intended application in our systems.
- Pertinent literature, including applicable certifications and standards, such as AWWA/ANSI, ASTM, UL, etc., recommended O & M procedures, product history, user references, including key contact persons.

Review Process

1. The initial review of a submittal will establish whether or not the City has an interest in potential use of the product / process.
2. If the City concludes that it is interested in the product / process, a formal presentation will be scheduled, with samples, if appropriate.

Review Criteria

The review criteria may include, but is not expressly limited to the following:

- Does the product/process comply with current City technical specifications?
- Does the product/process meet current industry standards?
- Is the product/process proprietary?
- History of manufacture and or use of the product/process.
- References from past users.
- Has the product/process been approved by the State or regional municipalities.
- Is the product/process compatible with City utility systems?
- Advantages/disadvantages versus currently approved products or practices.
- Will the product/process require additional repair inventory / training?
- Availability of technical/operational support.

Decisions and Notification

Under normal circumstances, final decisions will be made, and submitters will be notified in writing within 60 days of the Committee meeting. Appeals to the Committee's decisions may be made to the Chairman. Further appeals should be made to the Director of Public Utilities.

APPENDIX D

Sample Water System and Sanitary Pump Station Model Data

The following water system and sewer pump station model information is typically what will be provided to Engineers/Developers when so requested of the Department.

This page intentionally left blank.

Sample Water System Model Data

This page intentionally left blank.

CITY OF SUFFOLK

DEPARTMENT OF PUBLIC UTILITIES / ENGINEERING DIVISION

MEMORANDUM

TO: XXXX XXXX

FROM: XXXX XXXX

DATE: XXXX XXXX

RE: XXXX XXXX – Water Model Results

XXXX,

Attached please find a Modeled Capacity Curve and location map for the City's water system in the vicinity of the proposed XXXX project. The Modeled Capacity Curve, based on the City's new water model, is being provided in lieu of fire hydrant flow tests since flow tests are time and date specific with respect to available flow and pressure in the system.

The Capacity Curve is provided to show availability in the existing XX" water main in front of the site, as shown on the attached location map, under a maximum day demand scenario (1900 hrs). The model indicates the system can supply XXXX gpm at 20 psi residual pressure. Please be advised that the maximum allowable velocity is 10 feet per second, which limits flows to XXXX gpm through a XX" water main (from a single direction).

Should you have any questions regarding these results, please feel free to contact me.

Attachments (2)

cc: Engineering File

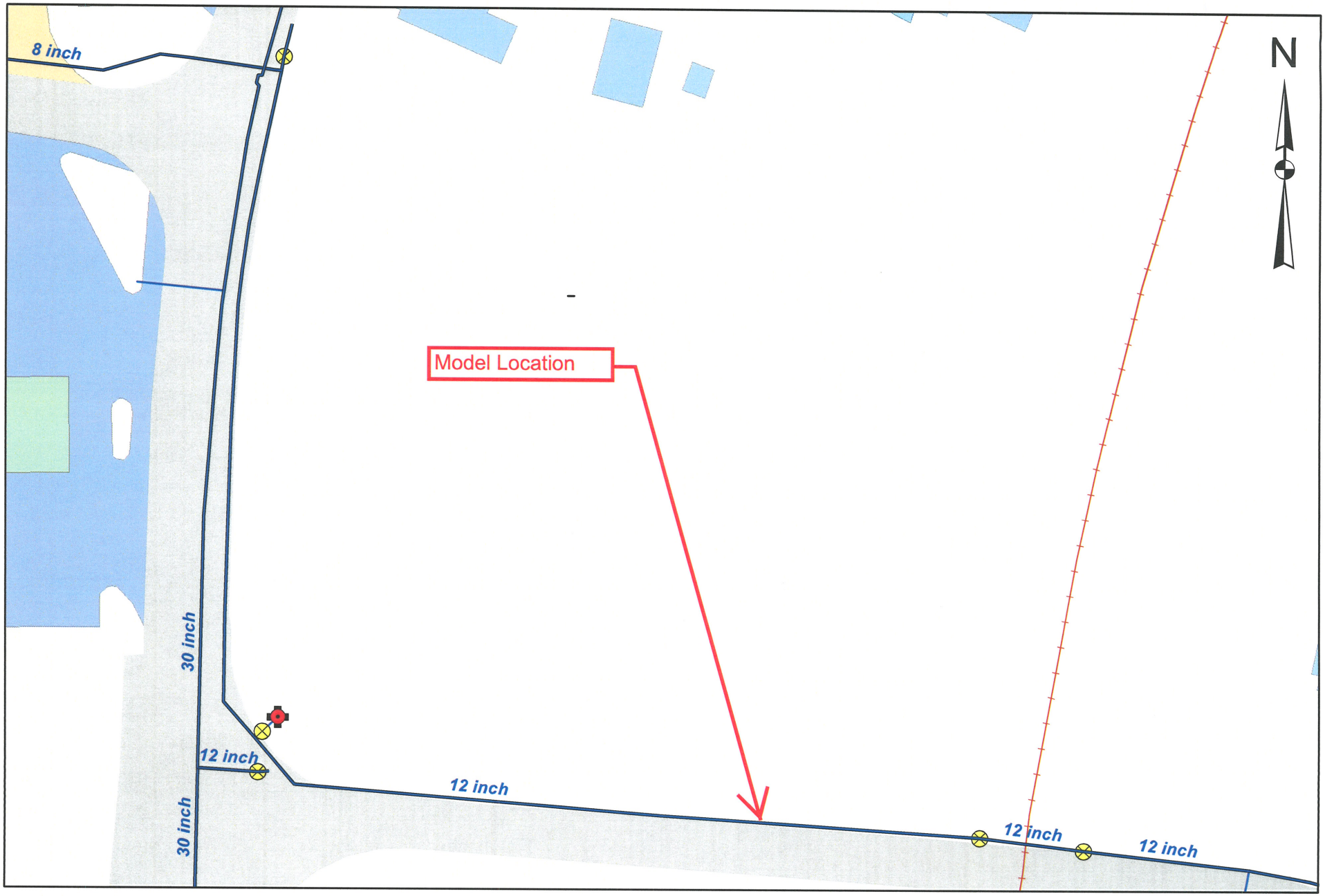

XXXX

50 25 0 50 100 150 200 Feet

1 inch = 50 feet

City of Suffolk Water System

Modeled Capacity Curve on X-Inch Water Main

XXXX Road

(Maximum Day Demand, 1900 hrs)

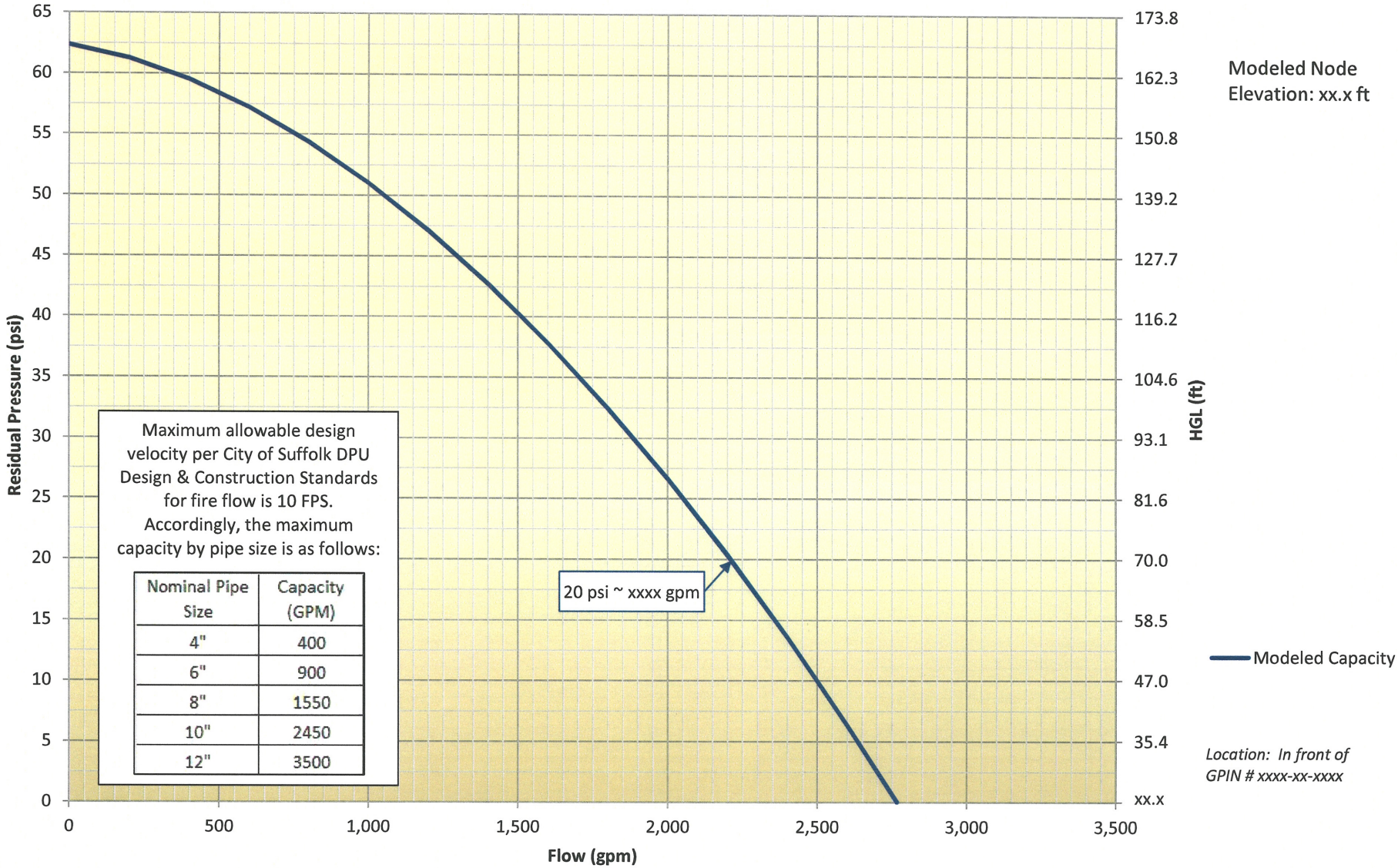

Maximum allowable design velocity per City of Suffolk DPU Design & Construction Standards for fire flow is 10 FPS. Accordingly, the maximum capacity by pipe size is as follows:

Nominal Pipe Size	Capacity (GPM)
4"	400
6"	900
8"	1550
10"	2450
12"	3500

mm/dd/yyyy

This page intentionally left blank.

Sample Sanitary Pump Station Model Data

This page intentionally left blank.

PUMP STATION XXX

DESIGN PARAMETERS - OCTOBER 17, 2013

PS #	XXX
ERUS	1453
% I/I REDUCTION (@ 10-YEAR)	15%

	CURRENT							FUTURE							
FLOW (see flow notes below)	**ADF[4]**			**2-YEAR**				**2-YEAR**				**10-YEAR**			
CURRENT PEAK FLOW[1,2,3]	NA			2732	GPD/ERU			2732	GPD/ERU			4264	GPD/ERU		
CURRENT BASE SEWER FLOW[2]	NA			310	GPD/ERU			310	GPD/ERU			310	GPD/ERU		
CURRENT I/I	NA			2422	GPD/ERU			2422	GPD/ERU			3954	GPD/ERU		
I/I REDUCTION	NA			363	GPD/ERU			363	GPD/ERU			593	GPD/ERU		
POST REHAB I/I	NA			2059	GPD/ERU			2059	GPD/ERU			3361	GPD/ERU		
+ CURRENT BSF	NA			310	GPD/ERU			310	GPD/ERU			310	GPD/ERU		
POST REHAB PEAK FLOW	NA			2369	GPD/ERU			2369	GPD/ERU			3671	GPD/ERU		
PFC (FLOW RATE X 1453)	NA					3.442	MGD			3.442	MGD			5.334	MGD
50% GROWTH (290 ERU x 0.5 @ 775)	NA					0.225	MGD			0.225	MGD			0.225	MGD
PFC + GROWTH	NA					3.666	MGD			3.666	MGD			5.559	MGD
DESIGN FLOW RATE (GPM)		**341**	**GPM**			**2546**	**GPM**			**2546**	**GPM**			**3860**	**GPM**
PRESSURE (see pressure notes below)															
PEAK HEADER NODE PRESSURE[5,6]		**71**	**FT-EL**			**107**	**FT-EL**			NA				NA	
AVERAGE HEADER NODE PRESSURE[5,6]		**55**	**FT-EL**			NA				NA				NA	
COMPARATIVE MODEL NODE PRESSURE[7]		NA				NA				**104**	**FT-EL**			**92**	**FT-EL**

Flow Notes

1. The source of the flow data used for model calibration and subsequent peak flow projections were two AV gravity flow meters maintained by Brown and Caldwell (2A and 1B).
   The meters capture the sewered area of what will become the Cedar Hill Cemetery service area.
2. Flow projections were based on modeling parameters developed using gravity flow meter data and the Long Term Simulation (LTS) and Log Pearson Type III projection methodology.
   The storm events used for model calibration and development of flow projections did not meet RTS criteria for >1 year event.
   The storm events used for model calibration occurred on 1/17/2013, 2/7/2013 and 2/26/2013 for meter 2A and 12/26/2012, 1/17/2013, and 2/7/2013 for meter 1B.
   Base Sewer Flow was developed using a period of consecutive dry weather days.
3. Peak flow Projections are based on BSF and peak RDII + TVGWI. 10-year RDII + TVGWI value is 5.857 MGD for meter 2A and 0.339 MGD for meter 1B.
   BSF is 0.442 MGD for meter 2A and 0.009 MGD for meter 1B.
4. Average Daily Flow (ADF) is determined by evaluating dry weather data based on the RHM-CA model simulation.

Pressure Notes

5. The elevation of the header node is **27.19** feet (See pump station schematic drawing for location)
6. The pressure for the current scenarios (ADF and 2-year) is developed using the revised RHM improvements model.
   Current flow for all basins in the model except the station under design where the design flow rate is used.
7. The future 2 and 10 yr head conditions reflect the best available information at this time for future system operating conditions.
   The intent of this information is to provide the City and the design engineer with guidance on these potential future operating conditions.
   The City and the design engineer will use this information to incorporate the flexibility to meet these potential future conditions in the current design, where possible.
   When the Regional Wet Weather Management Plan is developed and approved, these future operating conditions will be further refined.
   The peak water surface elevation was obtained from the June 2013 CH2M comparative model results
   (20130601_SS_CompA_2yr_Mod_NonRegPar_NonRefInfra_2yr.PRF and 20130601_SS_CompA_10yr_Mod_NonRegPar_NonRefInfra_10yr.PRF).
   Comparative Model Node: **BND-SF-189-1440** Node Invert Elevation: **23.19 ft** See attached map for node location in model

INITIAL PUMP DESIGN CRITERIA

SCENARIO	FLOW (GPM)	PEAK HEADER NODE PRESSURE (FT-EL)	AVERAGE HEADER NODE PRESSURE (FT-EL)	COMPARATIVE MODEL NODE PRESSURE (FT-EL)
ADF - Secondary Design Point	341	71	55	NA
2-YEAR CURRENT - Primary Design Point	2546	107	NA	NA
2-YEAR FUTURE*	2546	NA	NA	104
10-YEAR FUTURE*	3860	NA	NA	92

* Future conditions are subject to change based on the actual approved RWWMP.

PS XXX Hydraulic Eval - WWF and DWF analysis with 5 sec ramp up

Gravity Influent Flow

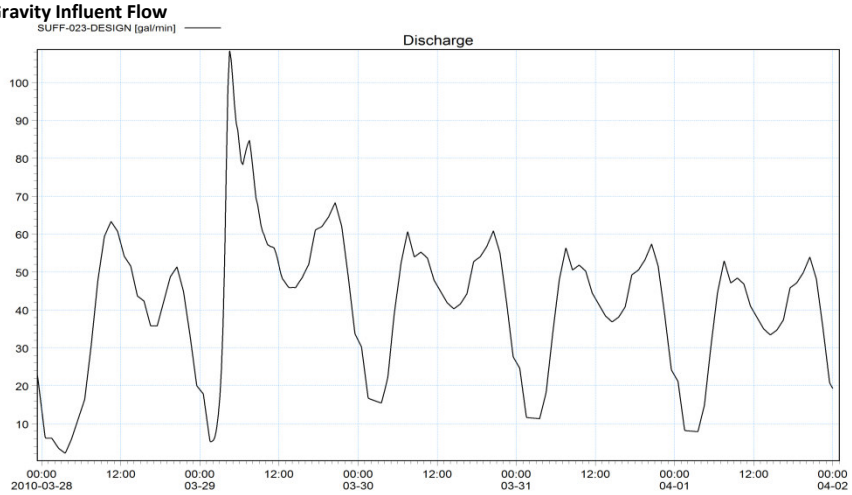

Header Node Pressure EL

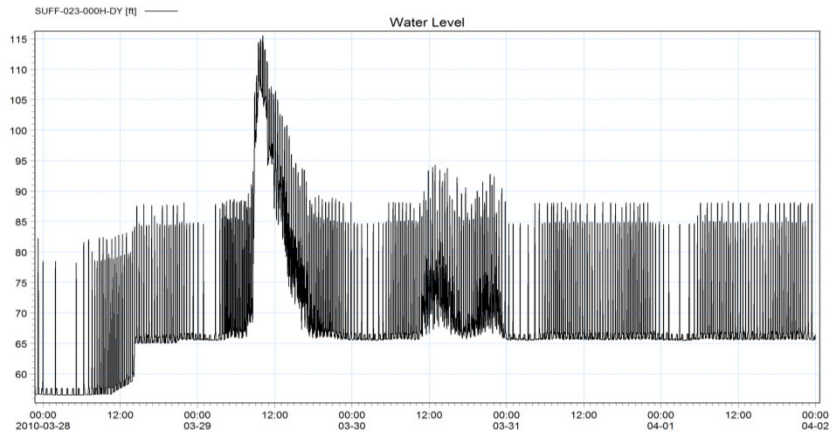

Force Main Discharge Flow

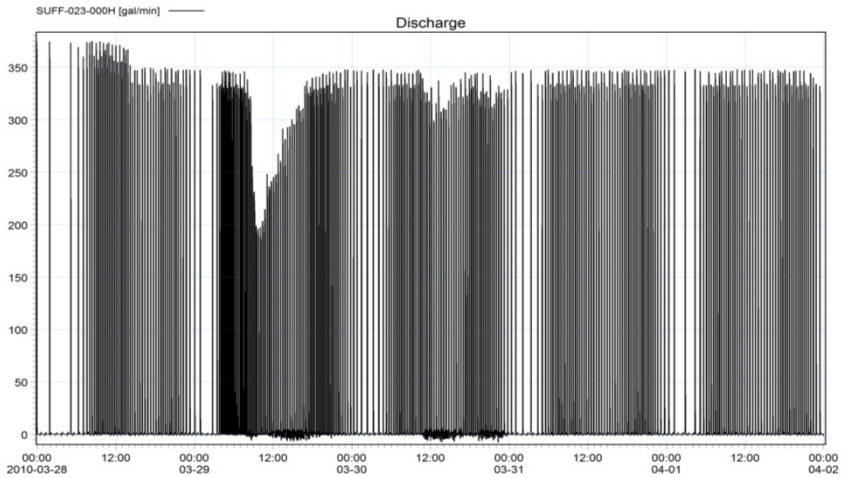

PS XXX Hydraulic Eval - WWF and DWF analysis with 5 sec ramp up

Surcharing Analysis	
Simulated Maximum Water Level EL	32.64
Influent Pipe Inv EL	33.63
Pump On EL	32.63
Pump Off EL	29.85
Wet Well Inv EL	26.48
Overflow EL	

Wet Well Water Level

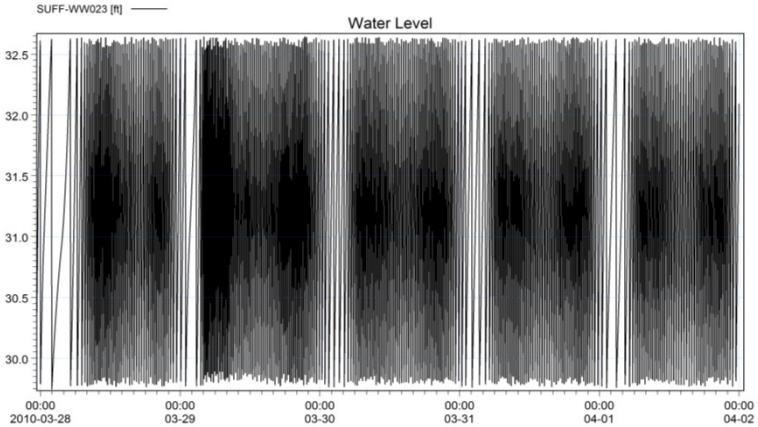

Pump Run Time (min)	
Average	3
Max	6.5
Min	2

Pump Starts/Hour	
Average	3
Max	5
Min*	0

*** Some hours the pump never turns on**

Pump Cycle Time (min)	
Average	24
Max	193.5
Min	11

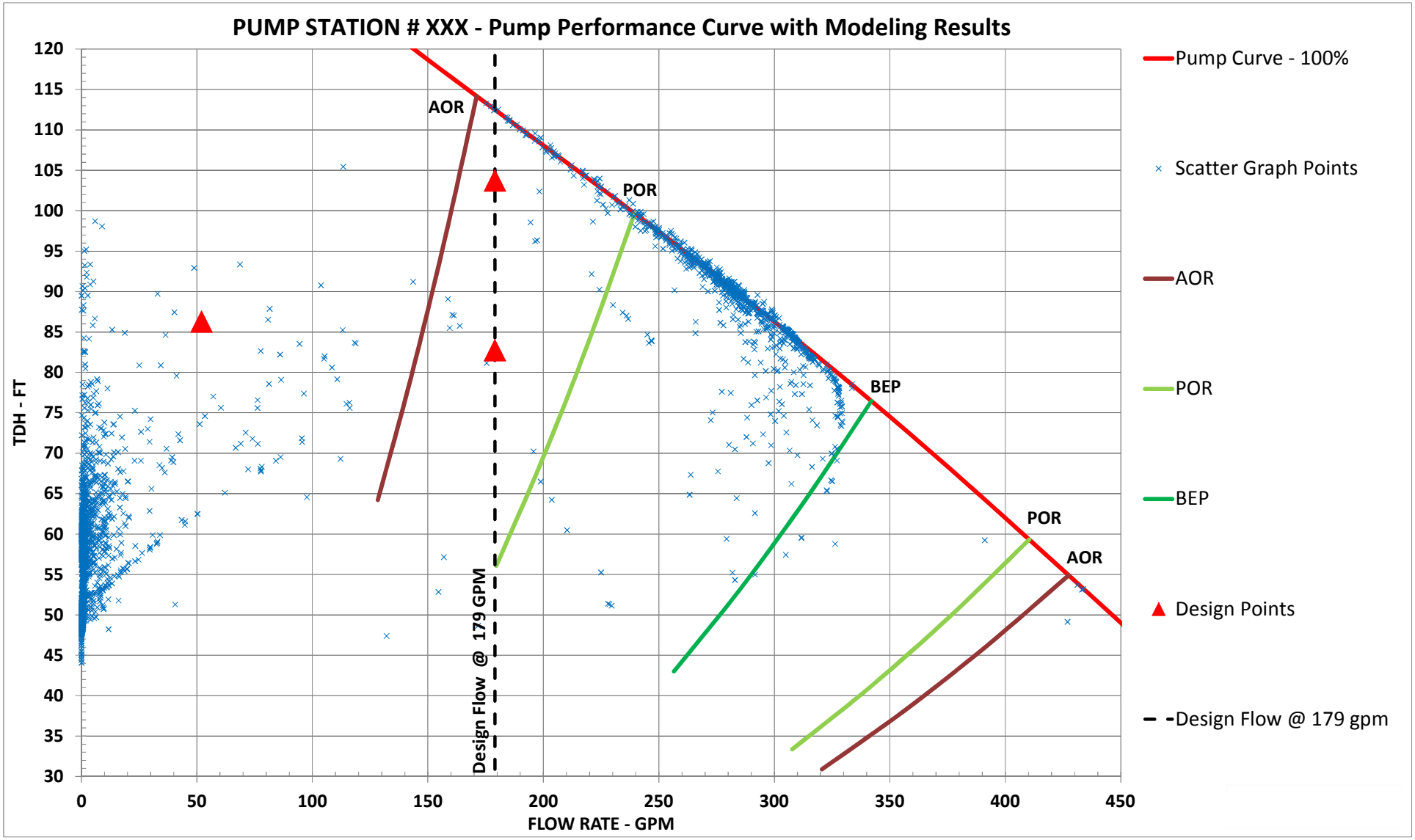
PUMP STATION # XXX - Pump Performance Curve with Modeling Results
TDH - FT
FLOW RATE - GPM
120
115
110
105
100
95
90
85
80
75
70
65
60
55
50
45
40
35
30
0
50
100
150
200
250
300
350
400
450
AOR
POR
BEP
POR
AOR
Design Flow @ 179 GPM
Pump Curve - 100%
Scatter Graph Points
AOR
POR
BEP
Design Points
Design Flow @ 179 gpm

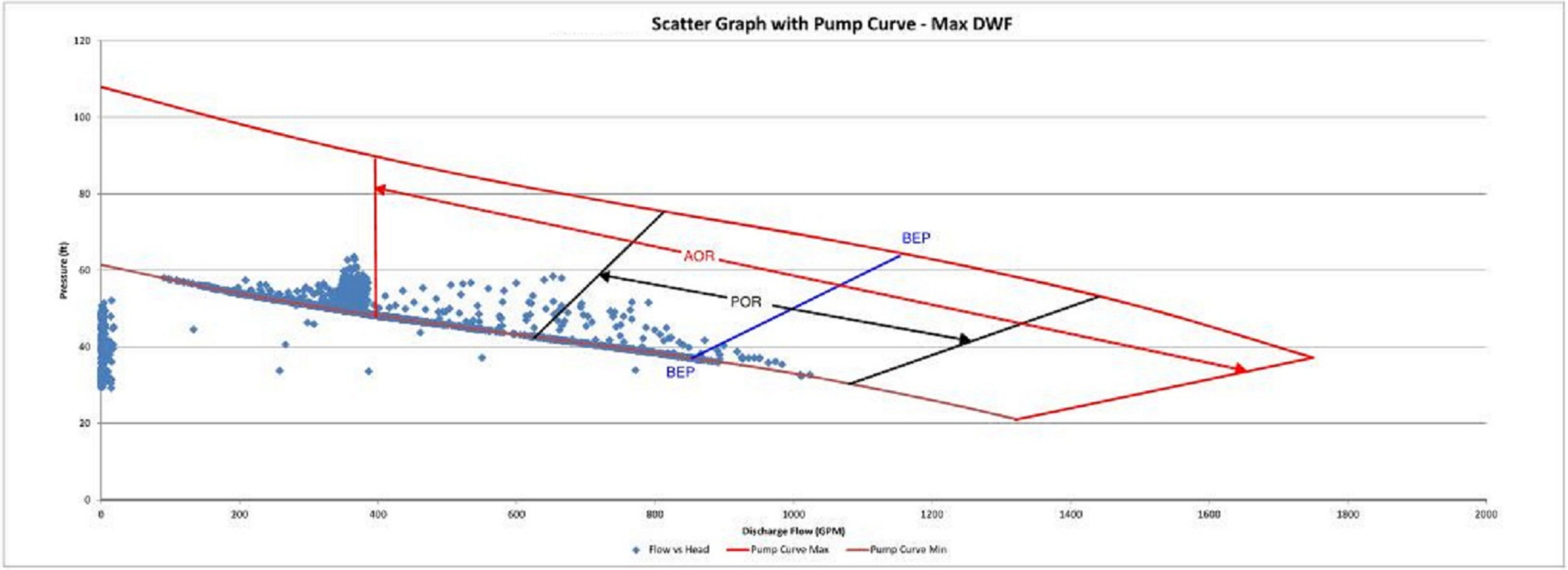
Scatter Graph with Pump Curve - Max DWF
Pressure (ft)
Discharge Flow (GPM)
0
20
40
60
80
100
120
0
200
400
600
800
1000
1200
1400
1600
1800
2000
AOR
POR
BEP
BEP
Flow vs Head
Pump Curve Max
Pump Curve Min

This page intentionally left blank.

PS NAME:_____

PS #:_____

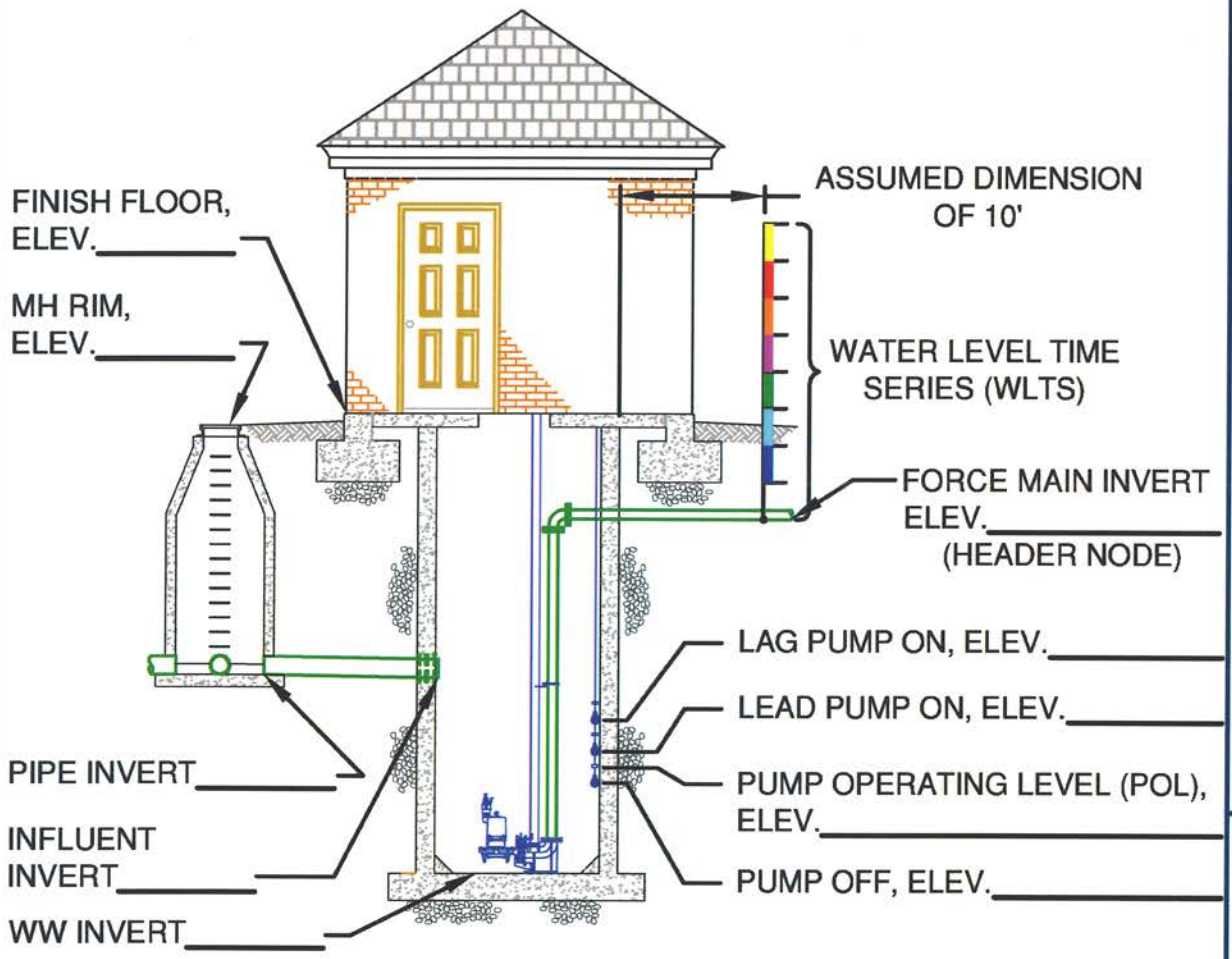

WW GEOMETRY: CIRCULAR - SQUARE - RECTANGULAR (CIRCLE ONE)
WW DIAMETER:_____
WW LENGTH:_____
WW WIDTH:_____
FM DIAMETER AND MATERIAL:_____
FM EQUIVALENT LENGTH UP TO HEADER NODE:_____
GRAVITY SEWER DIAMETER AND MATERIAL:_____

TYPICAL PUMP STATION SCHEMATIC

NOT TO SCALE

City of Suffolk Department of Public Utilities

TYPICAL PUMP STATION SCHEMATICS

FIGURE

This page intentionally left blank.

APPENDIX E

RECORD DRAWINGS

This page intentionally left blank.

APPENDIX E

1.0 RECORD DRAWINGS

1.1 Professional Certification of record drawings by either a Virginia Licensed Surveyor and/or the Engineer of Record is required before a Project will be accepted by the Department. For City projects, the Contractor shall be responsible for providing a complete set of marked-up construction drawings to the EOR prior to acceptance by the Department.

1.2 The purpose of professional certification for record drawings is to provide the Department with some degree of assurance that:

1) The project as-built information has been captured accurately and that the record drawing is a correct and true depiction of how the project was constructed;

2) The project was constructed in accordance with the approved drawings and the Department's Public Facilities Manual Volume II (PFM V-II) and any deviations from the approved drawings were reviewed and approved by a competent, responsible Engineer who attests that the Field Changes were constructed in conformance with the Department's PFM V-II and a valid Field Change was approved by the Department.

1.3 Each sheet shall bear the following three statements and shall be signed and sealed by the Licensed Surveyor and the Engineer of Record as appropriate:

> I, (SURVEYOR'S PRINTED NAME), hereby certify that this Project was surveyed by me or under my direct supervision and the information provided correctly reflects the Project as it was constructed. I further certify that the information depicted hereon was obtained in conformance with the City of Suffolk Department of Public Utilities PFM V-II.
>
> _____ _____
> Signature Date

I, (ENGINEER OF RECORD's PRINTED NAME), hereby certify that this Record Drawing was prepared by me or under my direct supervision based on as-built information obtained by (SURVEYOR'S PRINTED NAME) on the date(s) listed above and that this Record Drawing correctly represents that the project was constructed in conformance with the approved plans and specifications and any Department approved Field Changes, and in accordance with the City of Suffolk Department of Public Utilities PFM V-II with exceptions noted herein and listed below.

_____ _____

Signature Date

I, (ENGINEER OF RECORD's PRINTED NAME), hereby certify that this Approved Drawing was signed and sealed by (ORIGINAL ENGINEER'S PRINTED NAME) and dated (SEALED DATE).

_____ _____

Signature Date

1.4 The Engineer of Record shall furnish the Department a complete set of drawing files in .pdf format at a resolution required to retain all information at a readable level (600 dpi, minimum) showing the as-built locations and dimensions. Record drawings (.pdf) shall be combined in one drawing set file, and furnished to the Department on a CD.

1.5 All as-built dimensions shall be expressed in feet with vertical datum elevations based on City of Suffolk NAVD 1988 and horizontal location based on Virginia State Plane Coordinate System, South Zone, NAD 83, 1993 HARN.

1.6 Each sheet shall be marked as "Record Drawing" and dated. All as-built information shall be "blocked" or "framed" for identification as final as-built information. Where data is subsequently revised based on as-built information, the original data shall be removed. Do not use "Strikeout" on text or items not correct. Record drawings shall be based upon revisions to the approved drawings and shall be certified as required herein.

1.7 Plan view of proposed facilities shall be redrawn to depict as-built conditions if the difference between the approved plans and the as-built

location deviates by greater than five (5) feet. Utility profiles shall be redrawn if the difference between the approved plans and the as-built location deviates by greater than one (1) foot. Any updated Record Drawings provided shall be signed by the Engineer of Record in accordance with Section 1.3 above. Record drawings that do not meet this criteria will be returned marked "REJECTED". Corrected Record Drawings will be reviewed upon resubmittal. The Project shall not be accepted by the City and placed into service until acceptable Record Drawings have been received and approved by the City (Ref. 1.1 above).

1.8 As-built information shall also include accurate field-collected information on crossing utilities.

1.9 In addition to record drawings submitted as detailed above, digital x, y, and z coordinate information shall be recorded in the field during (and after) construction using Global Positioning System (GPS) equipment or conventional survey methods (suitable for the accuracy required herein). This information shall be provided to the Department for the purposes of updating the City's GIS system.

1.10 In addition, a Certificate to Operate as required by DEQ SCAT Regulations and the VDH Completion Statement in accordance with VDH Waterworks Regulations shall be provided.

2.0 RECORD INFORMATION COLLECTION

2.1 The following provides the requirements for collecting mapping-grade and survey-grade as-built information for the Department of Public Utilities required for the production of Record Drawings. This information may be used (as applicable) to populate the GIS datasets required above.

2.2 Appendix B-5, Sewer Slopes Check Form, and associated instructions in Chapter 4 – Construction, provide the procedure to be performed (for gravity sanitary sewer installation) to verify that the required pipe slopes are achieved. This data may be used to augment the Record Drawing information and GIS information.

General Data Standards		
Accuracy	**Mapping-Grade Accuracy:** • *Horizontally – approximately 6 centimeters* • *Vertically – approximately 4 centimeters*	
	Survey-Grade Accuracy: • *Horizontally – approximately 3 centimeter* • *Vertically – approximately 2 centimeters*	
Delivery format	The surveyor shall provide the data outlined below in individual ArcGIS 10 shapefiles.	
Sanitary Sewer Data Collection Requirements		
	Features to Collect	**Notes**
Gravity Sanitary Sewer	Manhole Rim	• Survey Grade Accuracy.
	Upstream (US) Invert	• Survey Grade Accuracy.
	Downstream (DS) Invert	• Survey Grade Accuracy.
	Pipe Length	• Measurement of pipe from US manhole to DS manhole.
	Pipe Slope	• Difference between US Invert and DS Invert divided by the Pipe Length.
	Cleanouts	• Mapping Grade Accuracy.
Sanitary Force Main	Blowoffs, Air Vents &Mainline Valves	• Mapping Grade Accuracy • Center of Cover
Sanitary Pump Station	Wetwell Top, Control Room Floor	• Survey Grade Accuracy
	Gravity Invert In	• Survey Grade Accuracy.
	Wetwell Floor	• Wetwell Top elevation minus measurement from Wetwell Top to Invert In.
	Pump Room Floor	• Survey Grade Accuracy. • Only for Wetwell/Drywell Stations • Control Room Floor elevation minus measurement from

		Control Room Floor to Pump Room Floor.
Water System Data Collection Requirements		
Water Lines	Blowoffs, Air Release Hydrants & Mainline Valves	• Mapping Grade Accuracy • Center of Cover or Hydrant Operating Nut

End of Section

This page intentionally left blank.

APPENDIX F

STANDARD DETAILS

This page intentionally left blank.

City of Suffolk
Public Facilities Manual Volume II

STANDARD DETAILS

Series 100 - Water

150: Pipe Termination and Blow-Off

151-1: Typical Fire Hydrant Connection (Main Line In Unpaved Area)

151-2: Typical Fire Hydrant Connection (Main Line In Paved Area)

152-1: Fire Hydrant Connection Crossing Ditch (Main Line In Unpaved Area)

152-2: Fire Hydrant Connection Crossing Ditch (Main Line In Paved Area)

153: 3/4" – 1" Water Meter Installation Detail

154: 1 1/2" – 2" Water Meter Installation Detail

155-1: 3" – 10" Water Meter Installation Detail

155-2: Potable Use Only Water Vault Dimensions and Clearances

155-3: Master Meter Vault Size for Combined Domestic and Fire Hydrant System

155-4: Meter Vault Notes

156-1: Fire Service Backflow Prevention Details

156-2: Fire Service Backflow Prevention Notes

City of Suffolk
Public Facilities Manual Volume II

STANDARD DETAILS

This page intentionally left blank.

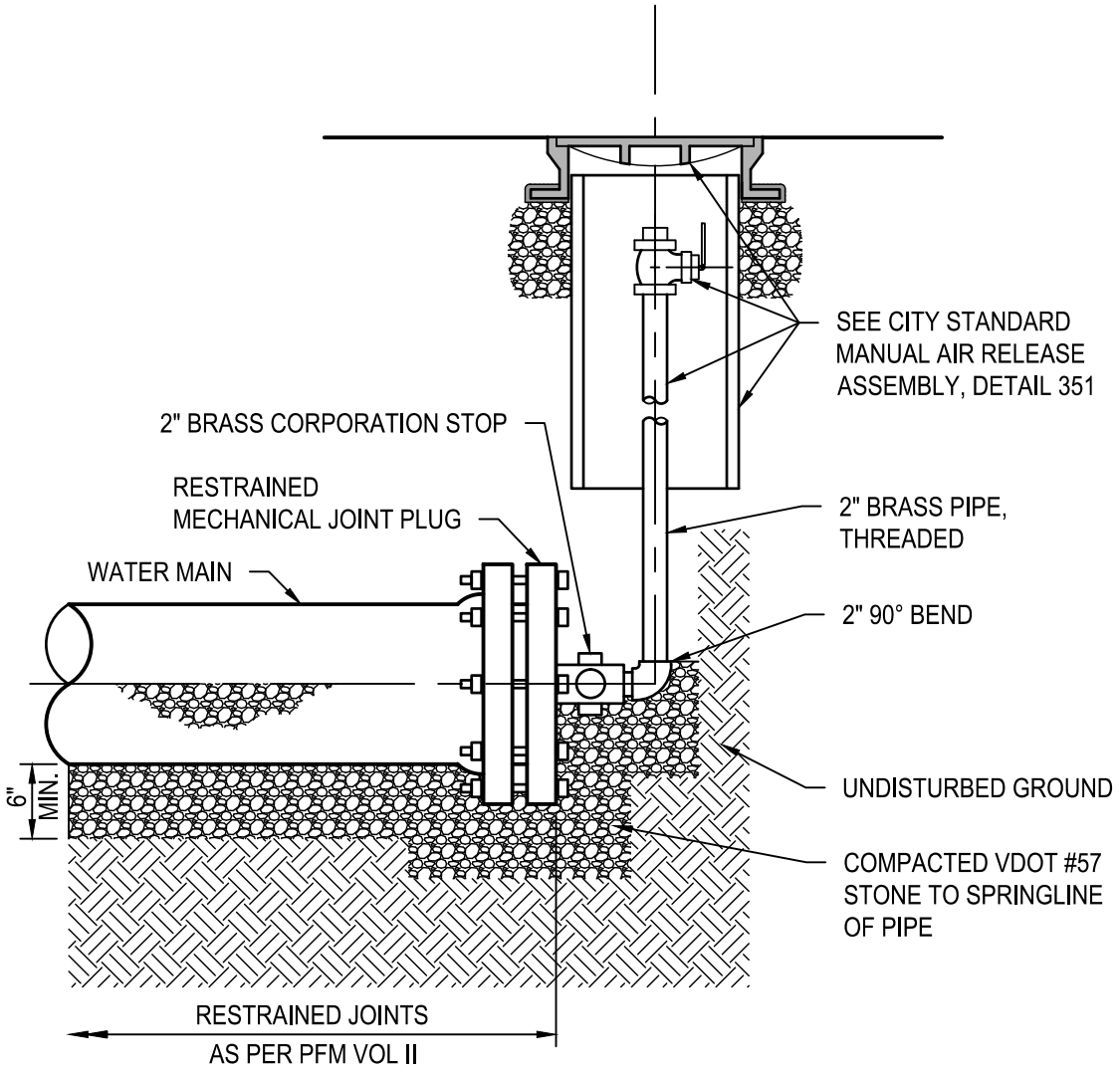

NOTE:
1. FOR PVC PIPING USE MECHANICALLY RESTRAINED CAP.

PIPE TERMINATION AND BLOW-OFF

NOT TO SCALE

REFERENCE	RELEASE 1	CATEGORY	SHEET NO.	DPU DETAIL NO.
PFM Vol. II	2017	WATER	1 of 1	150

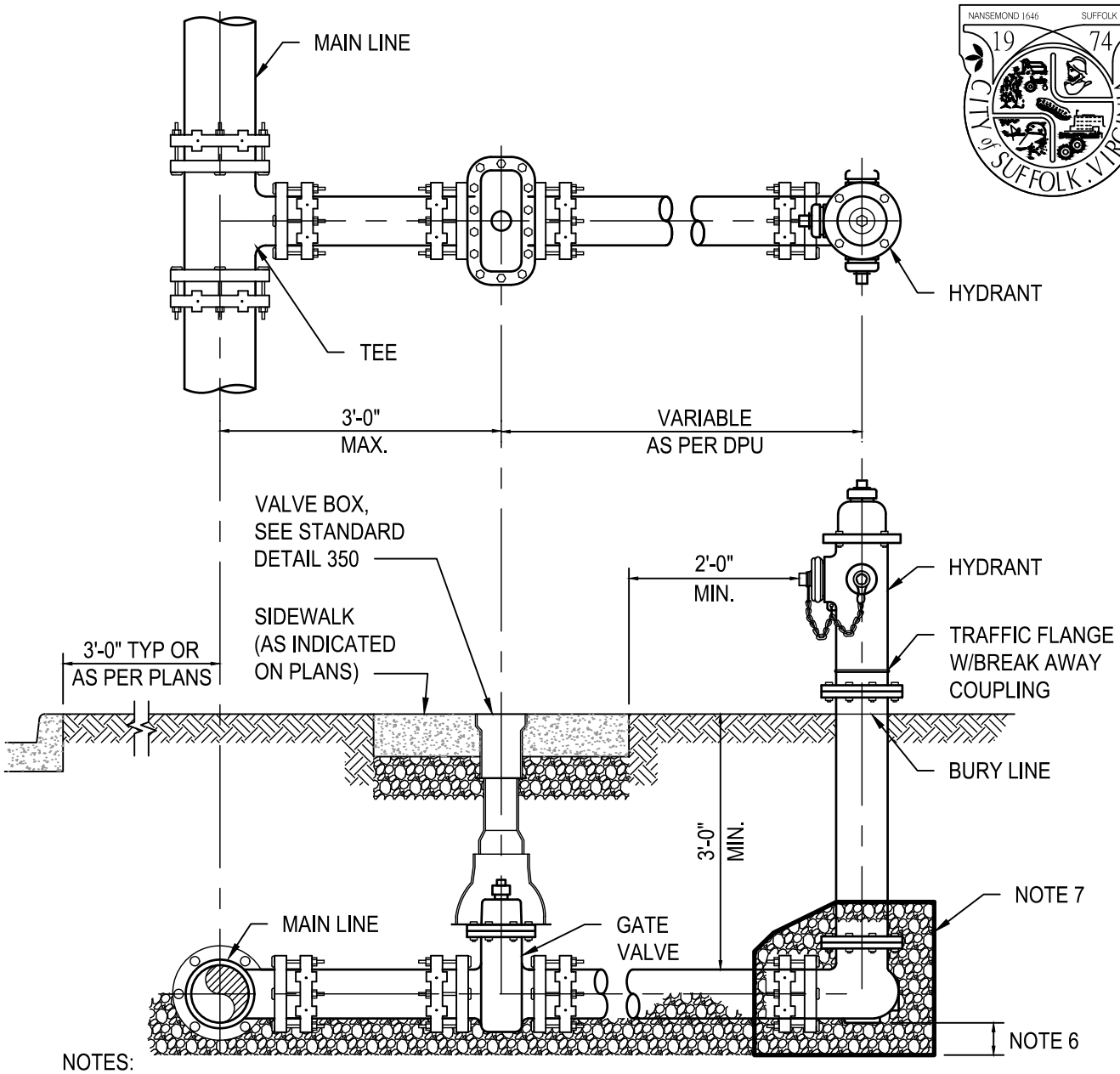

NOTES:

1. ALL HYDRANT CONNECTIONS SHALL BE INSPECTED BY THE DEPARTMENT OF PUBLIC UTILITIES PRIOR TO BACKFILLING.
2. ALL HYDRANT BRANCH LINE PIPE SHALL BE 6-INCH MINIMUM THICKNESS CLASS 50 DUCTILE IRON RESTRAINED JOINT FULL LENGTH UNLESS DESIGN CALCULATIONS DICTATE OTHERWISE AS APPROVED BY DPU.
3. ALL PIPE AND FITTINGS WITHIN 10 FEET OF A MAIN LINE, VALVE OR HYDRANT SHALL BE RESTRAINED MECHANICAL JOINT.
4. PUMPER NOZZLE SHALL FACE ROADWAY UNLESS OTHERWISE SPECIFIED.
5. BRANCH LINE, TEE, GATE VALVE, AND HYDRANT INLET CONNECTION SHALL BE 6-INCH.
6. 6-INCH MIN. COMPACTED VDOT #57 STONE BEDDING UNDER PIPE AND UP TO SPRING LINE.
7. MINIMUM 1 CU. FT. VDOT #57 STONE, WRAP IN FILTER FABRIC.

TYPICAL FIRE HYDRANT CONNECTION (MAIN LINE IN UNPAVED AREA)

NOT TO SCALE

REFERENCE	RELEASE 1	CATEGORY	SHEET NO.	DPU DETAIL NO.
PFM Vol. II	2017	WATER	1 of 1	151-1

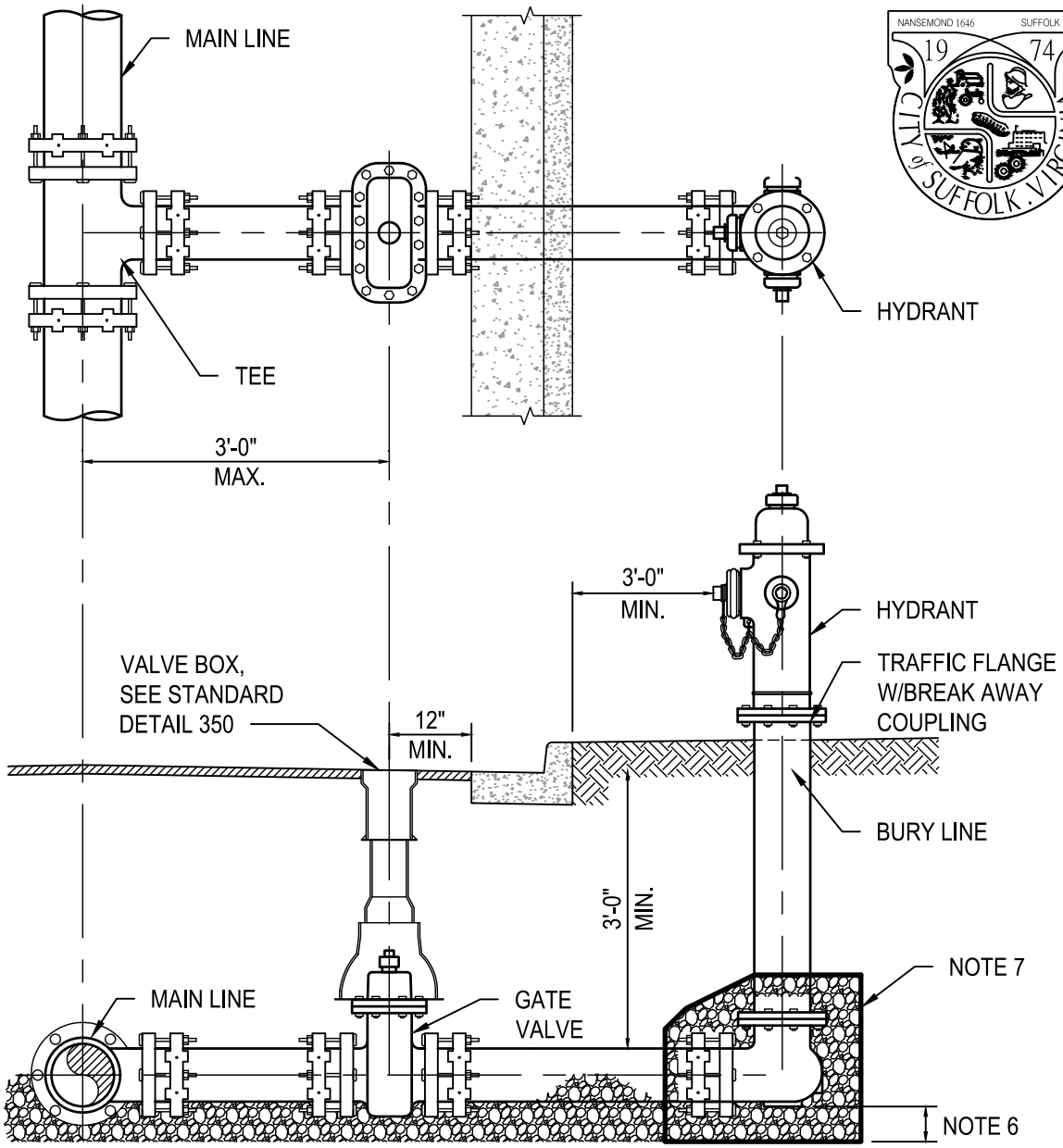

NOTES:

1. ALL HYDRANT CONNECTIONS SHALL BE INSPECTED BY THE DEPARTMENT OF PUBLIC UTILITIES PRIOR TO BACKFILLING.
2. ALL HYDRANT BRANCH LINE PIPE SHALL BE 6-INCH MINIMUM THICKNESS CLASS 50 DUCTILE IRON RESTRAINED JOINT FULL LENGTH UNLESS DESIGN CALCULATIONS DICTATE OTHERWISE AS APPROVED BY DPU.
3. ALL PIPE AND FITTINGS WITHIN 10 FEET OF A MAIN LINE, VALVE OR HYDRANT SHALL BE RESTRAINED MECHANICAL JOINT.
4. PUMPER NOZZLE SHALL FACE ROADWAY UNLESS OTHERWISE SPECIFIED.
5. BRANCH LINE, TEE, GATE VALVE, AND HYDRANT INLET CONNECTION SHALL BE 6-INCH.
6. 6-INCH MIN. COMPACTED VDOT #57 STONE BEDDING UNDER PIPE AND UP TO SPRING LINE.
7. MINIMUM 1 CU. FT. VDOT #57 STONE, WRAP IN FILTER FABRIC.
8. VALVE BOX SHALL NOT BE SET IN CONCRETE GUTTER.

TYPICAL FIRE HYDRANT CONNECTION (MAIN LINE IN PAVED AREA)

NOT TO SCALE

REFERENCE	RELEASE 1	CATEGORY	SHEET NO.	DPU DETAIL NO.
PFM Vol. II	2017	WATER	1 of 1	151-2

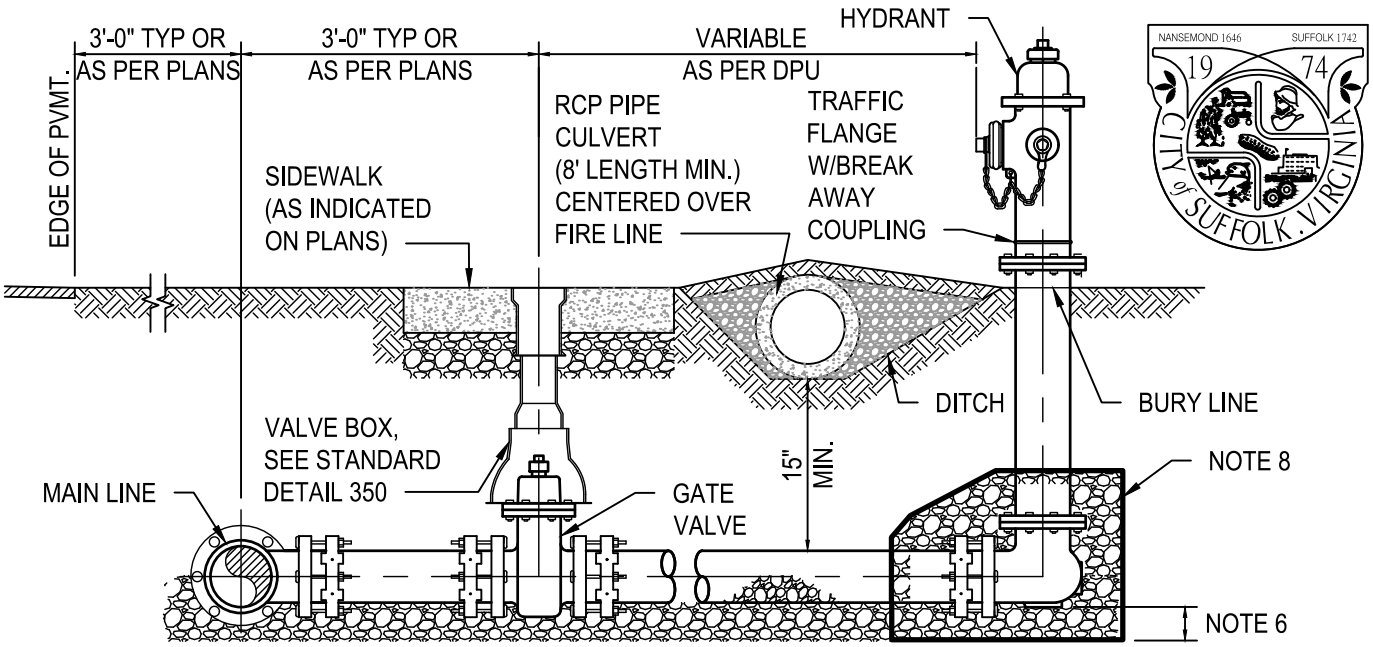

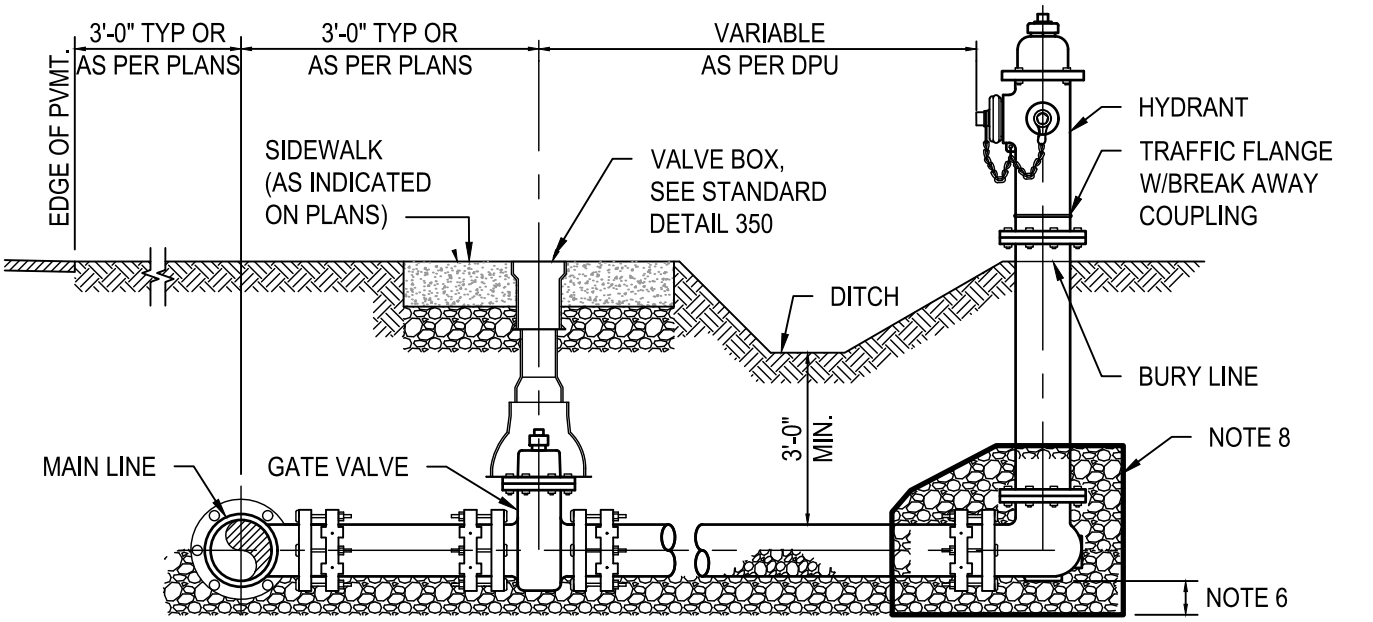

NOTES:

1. ALL HYDRANT CONNECTIONS SHALL BE INSPECTED BY THE DEPARTMENT OF PUBLIC UTILITIES PRIOR TO BACKFILLING.
2. ALL HYDRANT BRANCH LINE PIPE SHALL BE 6-INCH MINIMUM THICKNESS CLASS 50 DUCTILE IRON RESTRAINED JOINT FULL LENGTH UNLESS DESIGN CALCULATIONS DICTATE OTHERWISE AS APPROVED BY DPU.
3. ALL PIPE AND FITTINGS WITHIN 10 FEET OF A MAIN LINE, VALVE OR HYDRANT SHALL BE RESTRAINED MECHANICAL JOINT.
4. PUMPER NOZZLE SHALL FACE ROADWAY UNLESS OTHERWISE SPECIFIED.
5. BRANCH LINE, TEE, GATE VALVE, AND HYDRANT INLET CONNECTION SHALL BE 6-INCH.
6. 6-INCH MIN. COMPACTED VDOT #57 STONE BEDDING UNDER PIPE AND UP TO SPRING LINE.
7. IF DEPTH OF DITCH IS GREATER THAN 18-INCHES, AN 8-FOOT LENGTH (MIN.) CULVERT IS REQUIRED IN THE DITCH CENTERED OVER FIRE LINE. CULVERT DESIGN SHALL BE SUBMITTED TO DPU AND DPW FOR APPROVAL.
8. MINIMUM 1 CU. FT. VDOT #57 STONE, WRAP IN FILTER FABRIC.

FIRE HYDRANT CONNECTION CROSSING DITCH (MAIN LINE IN UNPAVED AREA)

NOT TO SCALE

REFERENCE	RELEASE 1	CATEGORY	SHEET NO.	DPU DETAIL NO.
PFM Vol. II	2017	WATER	1 of 1	152-1

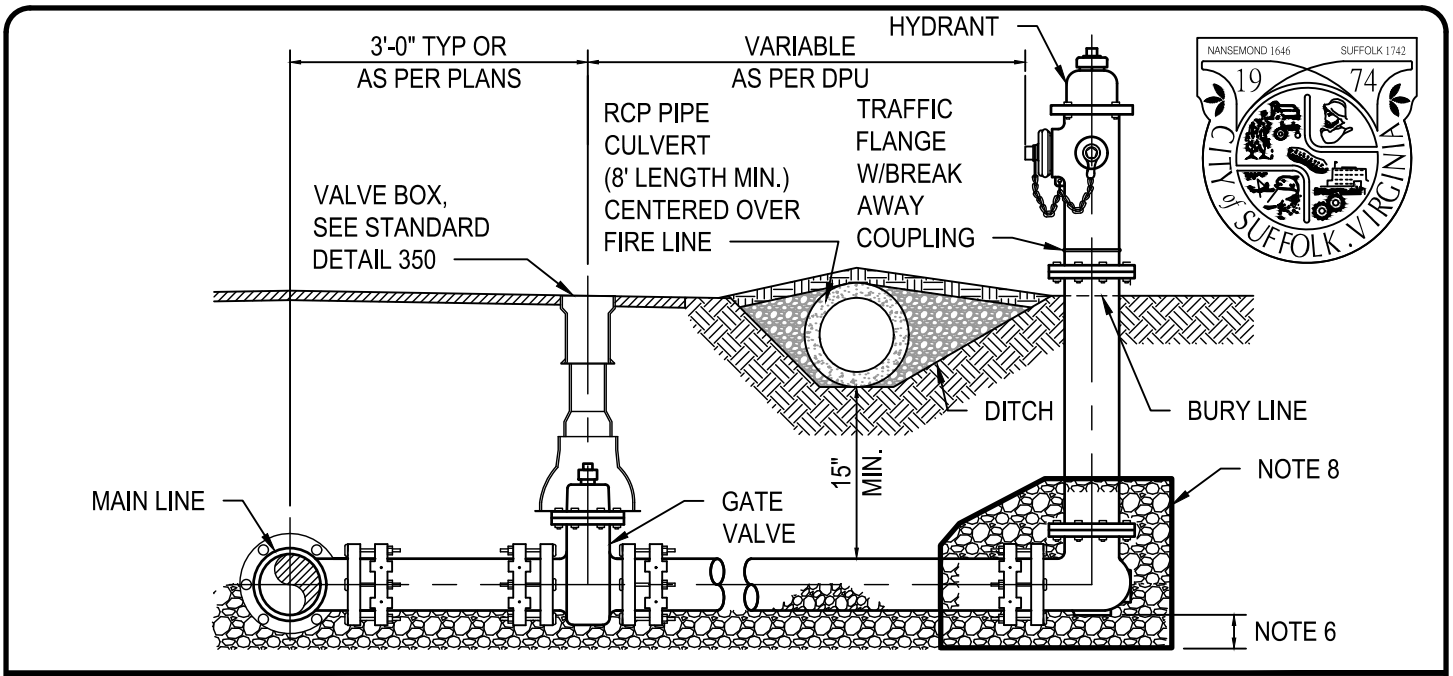

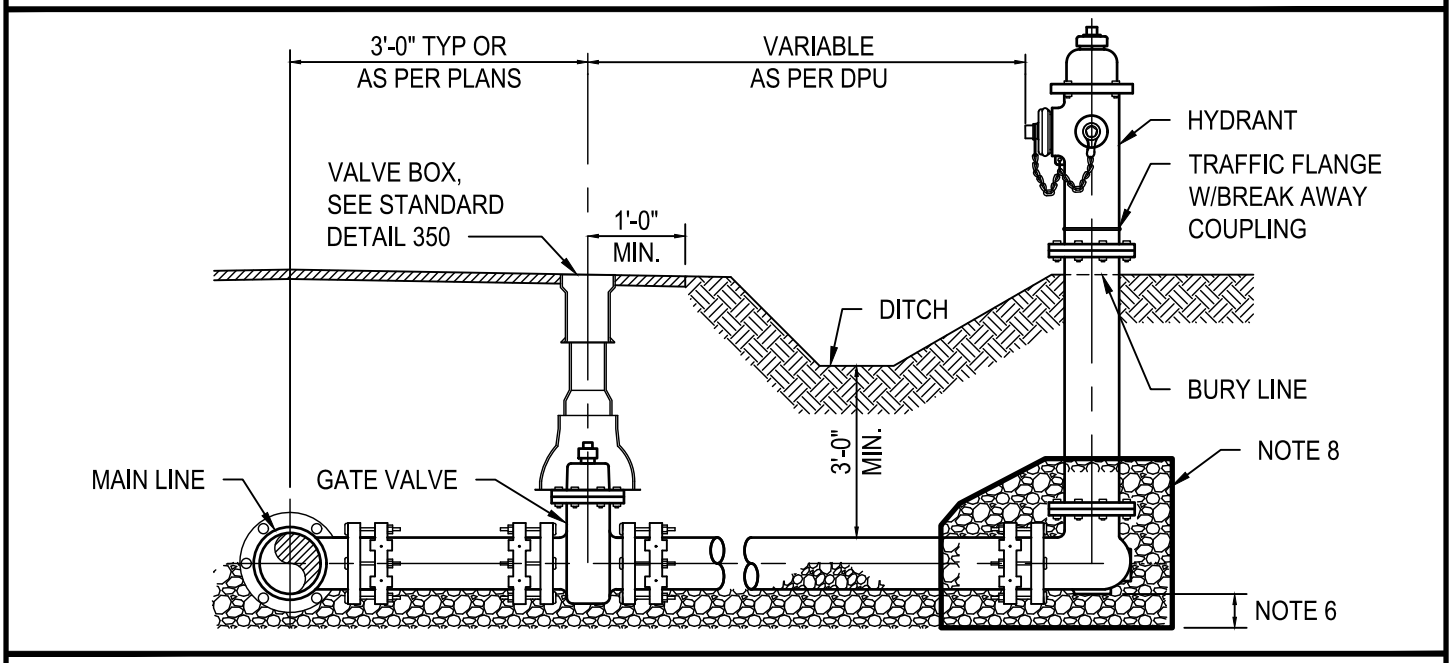

NOTES:

1. ALL HYDRANT CONNECTIONS SHALL BE INSPECTED BY THE DEPARTMENT OF PUBLIC UTILITIES PRIOR TO BACKFILLING.
2. ALL HYDRANT BRANCH LINE PIPE SHALL BE 6-INCH MINIMUM THICKNESS CLASS 50 DUCTILE IRON RESTRAINED JOINT FULL LENGTH UNLESS DESIGN CALCULATIONS DICTATE OTHERWISE AS APPROVED BY DPU.
3. ALL PIPE AND FITTINGS WITHIN 10 FEET OF A MAIN LINE, VALVE OR HYDRANT SHALL BE RESTRAINED MECHANICAL JOINT.
4. PUMPER NOZZLE SHALL FACE ROADWAY UNLESS OTHERWISE SPECIFIED.
5. BRANCH LINE, TEE, GATE VALVE, AND HYDRANT INLET CONNECTION SHALL BE 6-INCH.
6. 6-INCH MIN. COMPACTED VDOT #57 STONE BEDDING UNDER PIPE AND UP TO SPRING LINE.
7. IF DEPTH OF DITCH IS GREATER THAN 18-INCHES, AN 8-FOOT LENGTH (MIN.) CULVERT IS REQUIRED IN THE DITCH CENTERED OVER FIRE LINE. CULVERT DESIGN SHALL BE SUBMITTED TO DPU AND DPW FOR APPROVAL.
8. MINIMUM 1 CU. FT. VDOT #57 STONE, WRAP IN FILTER FABRIC.

FIRE HYDRANT CONNECTION CROSSING DITCH (MAIN LINE IN PAVED AREA)

NOT TO SCALE

REFERENCE	RELEASE 1	CATEGORY	SHEET NO.	DPU DETAIL NO.
PFM Vol. II	2017	WATER	1 of 1	152-2

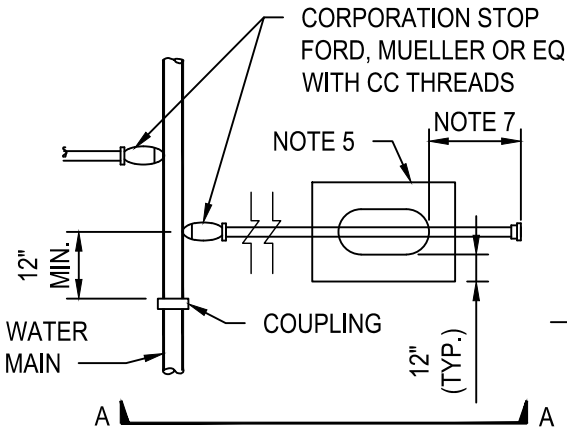

SERVICE CONNECTION
NOT TO SCALE

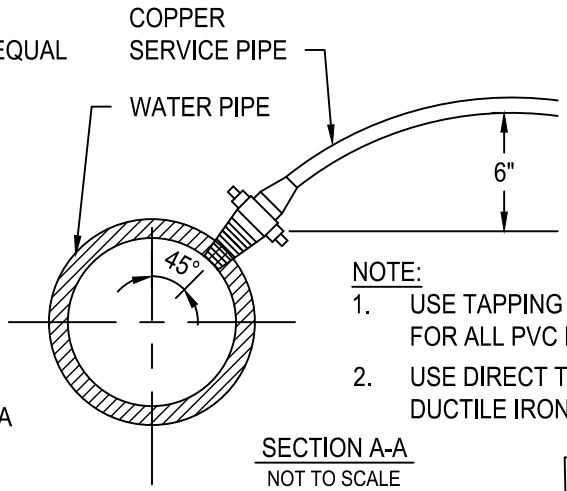

SECTION A-A
NOT TO SCALE

NOTE:
1. USE TAPPING SADDLE FOR ALL PVC PIPE .
2. USE DIRECT TAP FOR DUCTILE IRON PIPE.

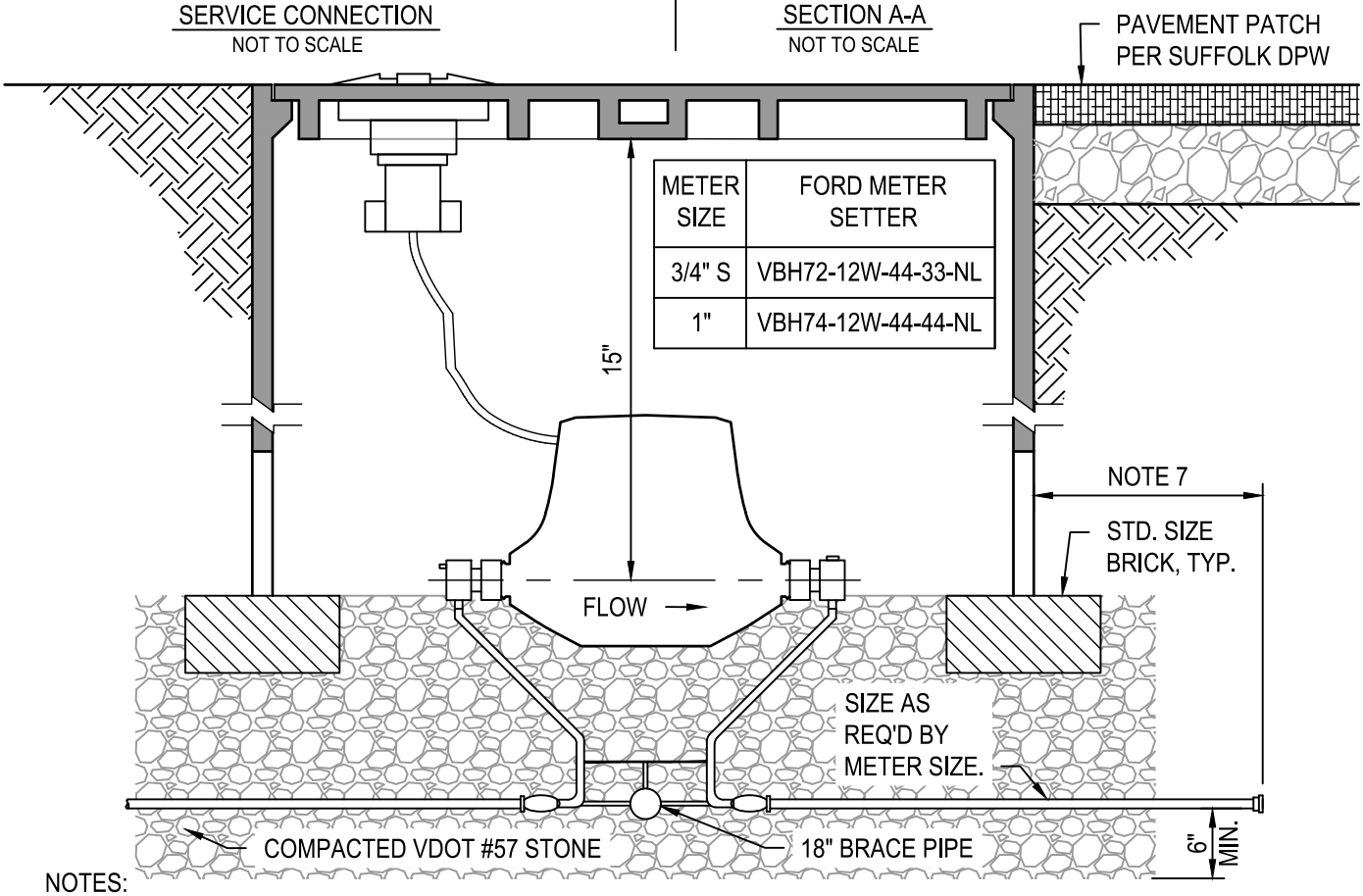

METER SIZE	FORD METER SETTER
3/4" S	VBH72-12W-44-33-NL
1"	VBH74-12W-44-44-NL

NOTES:
1. CAST IRON METER BOX AND LID SHALL BE CAPITOL FOUNDRY OF VA. INC MODEL MBX-1 WITH CUT OUT FOR SENSUS TOUCH READ SYSTEM PIT-LID MODULE. METER SHALL BE SENSUS iPERL TOUCH READ.
2. PROVIDE MUELLER DR2S OR APPROVED EQUAL SADDLES FOR CORPORATION STOPS IN PVC PIPE.
3. CAST IRON METER BOX AND LID NOT TO BE USED IN COMMERCIAL / INDUSTRIAL TRAFFIC AREAS.
4. PROVIDE 1" DIAMETER BRACE PIPE 18" LONG.
5. WHEN WATER METER IS LOCATED WITHIN DRIVEWAY, PROVIDE AN ISOLATION JOINT USING 1/2-INCH PREMOLDED JOINT FILLER 12" AROUND OUTSIDE DIAMETER OF METER BOX TO FACILITATE FUTURE MAINTENANCE.
6. WHEN WATER METER IS LOCATED IN PAVEMENT AND SUBJECTED TO HIGH DENSITY TRAFFIC, PROVIDE A METER BOX AND COVER SUITABLE FOR HS-20 (HS-20-44) LIVE LOADS.
7. EXTEND COPPER SERVICE PIPE 18" BEYOND METER BOX AND PROVIDE A TEMPORARY CAP ON END OF SERVICE PIPE. CONNECTION FITTING IS THE RESPONSIBILITY OF THE CUSTOMER.

3/4"- 1" WATER METER INSTALLATION DETAIL

NOT TO SCALE

REFERENCE	RELEASE 1	CATEGORY	SHEET NO.	DPU DETAIL NO.
PFM Vol. II	2017	WATER	1 of 1	153

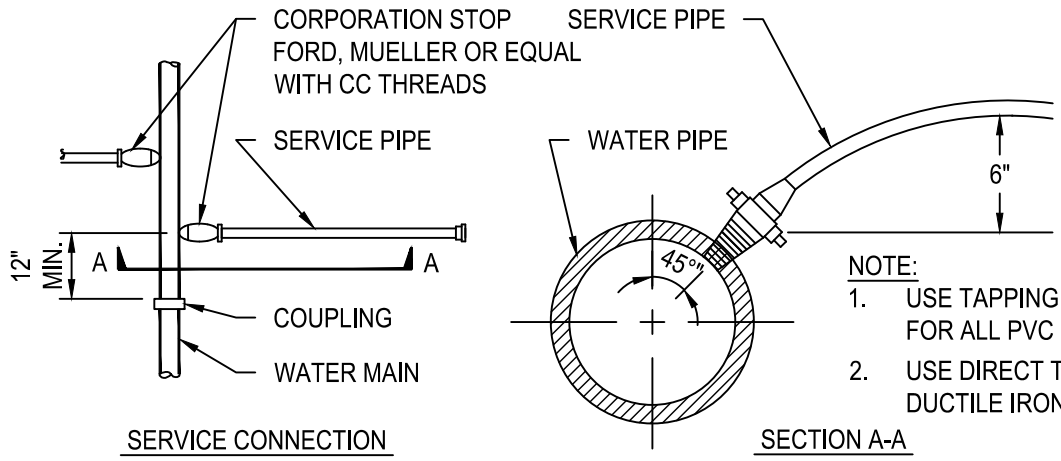

SERVICE CONNECTION

SECTION A-A

NOTE:

1. USE TAPPING SADDLE FOR ALL PVC PIPE.
2. USE DIRECT TAP FOR DUCTILE IRON PIPE.

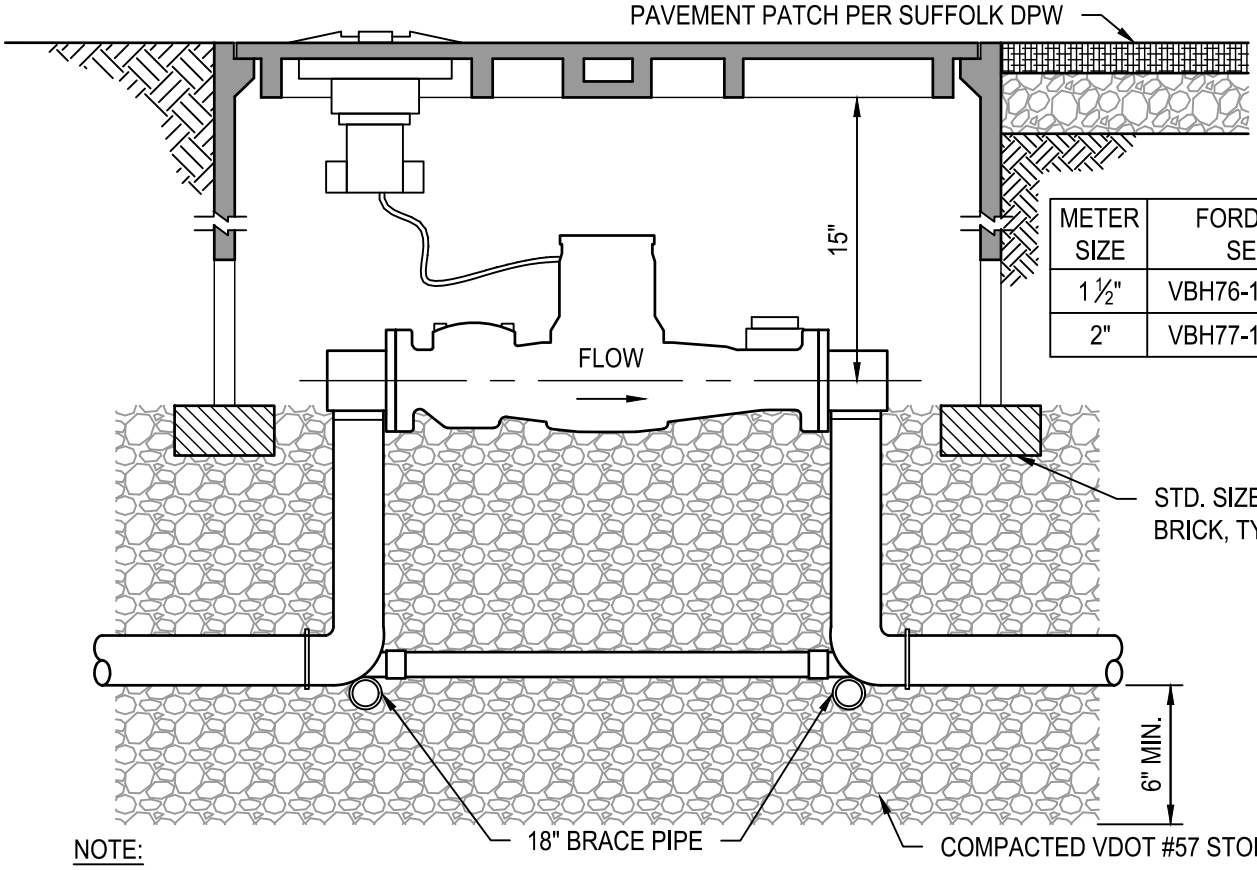

METER SIZE	FORD METER SETTER
1 ½"	VBH76-12-44-66-NL
2"	VBH77-12-44-77-NL

NOTE:

1. CAST IRON METER BOX AND LID SHALL BE CAPITOL FOUNDRY OF VA. INC MODEL MBX-5A WITH CUT OUT FOR SENSUS TOUCH READ SYSTEM PIT-LID MODULE. METER SHALL BE SENSUS OMNI R2 TOUCH READ.
2. PROVIDE MUELLER DR2S OR APPROVED EQUAL SADDLES FOR CORPORATION STOPS IN PVC PIPE.
3. CAST IRON METER BOX AND LID NOT TO BE USED IN COMMERCIAL / INDUSTRIAL TRAFFIC AREAS.
4. PROVIDE 1" DIAMETER BRACE PIPE 18" LONG. (QTY. = 2)
5. WHEN WATER METER IS LOCATED WITHIN DRIVEWAY, PROVIDE AN ISOLATION JOINT USING 1/2-INCH PREMOLDED JOINT FILLER 12" AROUND METER BOX TO FACILITATE FUTURE MAINTENANCE.
6. BYPASS SHALL NOT BE INCLUDED.

1 1/2" - 2" WATER METER INSTALLATION DETAIL

NOT TO SCALE

REFERENCE	RELEASE 1	CATEGORY	SHEET NO.	DPU DETAIL NO.
PFM Vol. II	2017	WATER	1 of 1	154

NOTES:

1. NOT TO BE USED IN HIGH DENSITY TRAFFIC AREAS.
2. SUBMIT FULL DESIGN FOR PRECAST CONCRETE VAULTS TO CITY FOR APPROVAL PRIOR TO INSTALLATION.
3. ALL PIPING FROM MAIN THRU VAULT SHALL BE DUCTILE IRON.

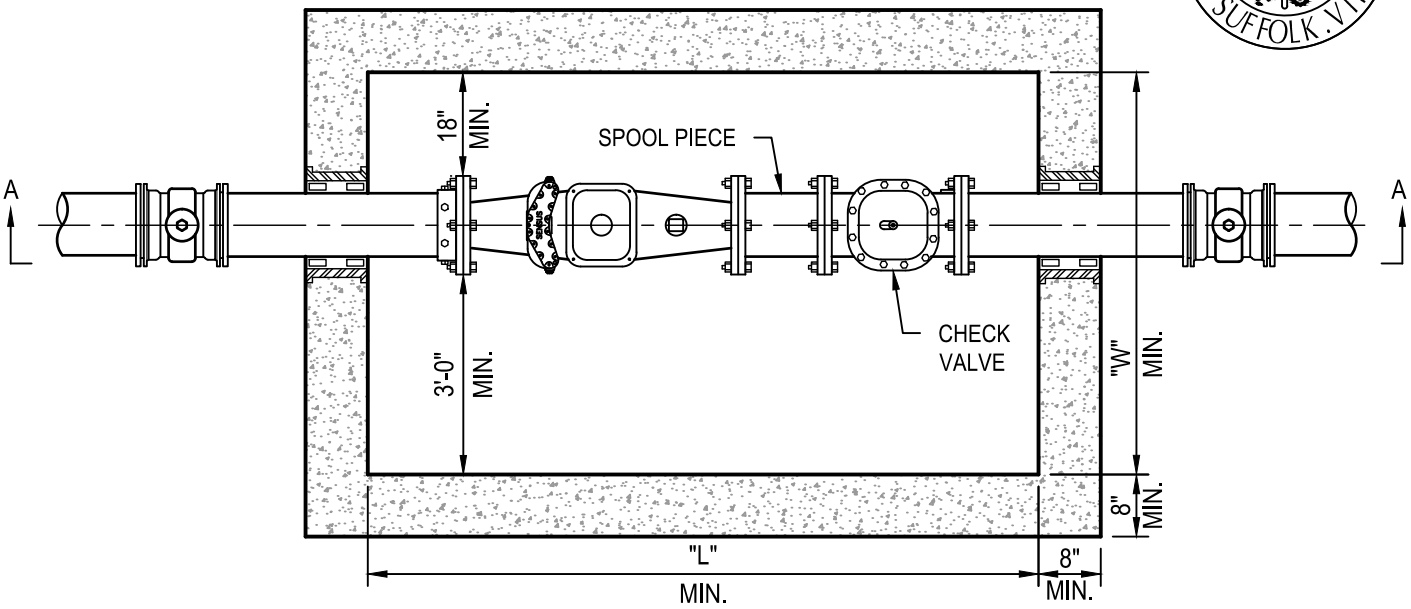

PLAN VIEW (TOP REMOVED)

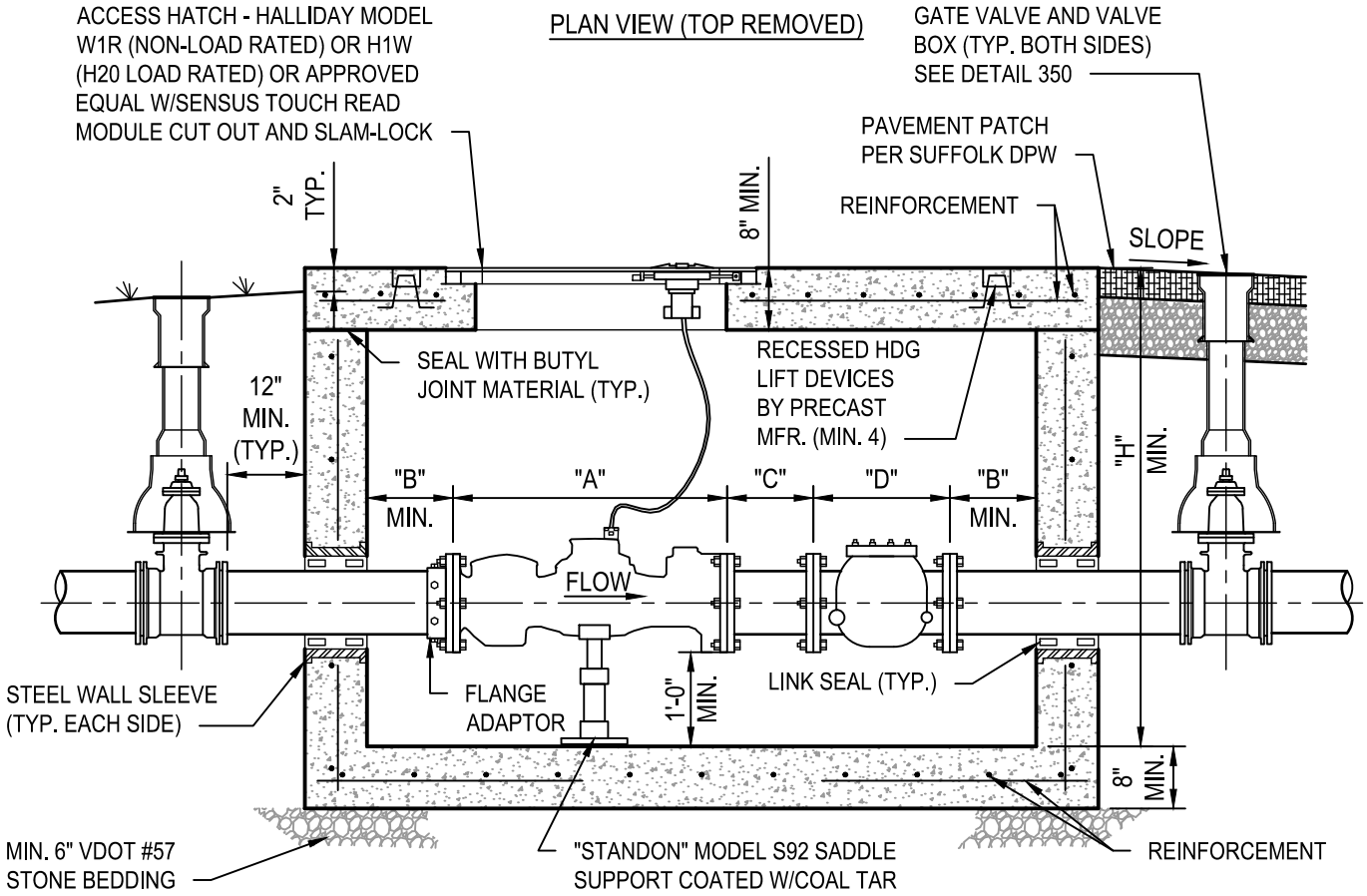

SECTION A-A

3" - 10" WATER METER INSTALLATION DETAIL

NOT TO SCALE

REFERENCE	RELEASE 1	CATEGORY	SHEET NO.	DPU DETAIL NO.
PFM Vol. II	2017	WATER	1 of 4	155-1

POTABLE USE ONLY WATER VAULT DIMENSIONS AND CLEARANCES									
METER TYPE	METER SIZE (INCHES)	METER LENGTH "A" (INCHES)	STRAIGHT PIPE LENGTH "B" (INCHES)	SPOOL PIECE LENGTH "C" (INCHES)	CHECK VALVE LENGTH "D" (INCHES)	VAULT INTERIOR MINIMUM DIMENSIONS			
						LENGTH "L" (FEET)	HEIGHT "H" (FEET)	WIDTH "W" (FEET)	HATCH CLEAR OPENING (INCHES)
SENSUS T2	3	19	12	12	11	5.5	4	5	36 x 36
	4	23	12	16	13	6.5	4	6	36 x 36
	6	27	12	24	16	7.5	5	6.5	36 x 36
	8	30-1/8	12	32	19.5	6.5	5	6.5	36 x 36
	10	41-1/8	12	40	24.5	7.5	5	6.5	42 x 48

NOTES:

1. SEE DETAIL 155-1 FOR VAULT LAYOUT.
2. POTABLE USE FOR HUMAN CONSUMPTION. COMMERCIAL AND INDUSTRIAL USE MAY REQUIRE ADDITIONAL PROTECTION AS DETERMINED BY THE DEGREE OF HAZARD.
3. DEGREE OF HAZARD SHALL BE DETERMINED BY THE OFFICE OF CROSS CONNECTION CONTROL.
4. A SINGLE CHECK VALVE SHALL BE INSTALLED IN THE METER VAULT A MINIMUM OF FOUR (4) PIPE DIAMETERS DOWNSTREAM OF THE METER.
5. COORDINATE METER SELECTION AND BACKFLOW PROTECTION REQUIREMENTS WITH THE DEPARTMENT.

MASTER METER VAULT SIZE FOR COMBINED DOMESTIC AND FIRE HYDRANT SYSTEM									
METER TYPE	METER SIZE (INCHES)	METER LENGTH "A" (INCHES)	STRAIGHT PIPE LENGTH "B" (INCHES)	SPOOL PIECE LENGTH "C" (INCHES)	CHECK VALVE LENGTH "D" (INCHES)	VAULT INTERIOR MINIMUM DIMENSIONS			
						LENGTH "L" (FEET)	HEIGHT "H" (FEET)	WIDTH "W" (FEET)	HATCH CLEAR OPENING (INCHES)
SENSUS OMNI F2	6	45	12	30	16	9.5	4	6	36 x 36
	8	53	12	40	19.5	11.5	5	6.5	42 x 48
	10	68	12	50	24.5	14	5	6	48 x 48

NOTES:

1. SEE DETAIL 155-1 FOR VAULT LAYOUT.
2. EXAMPLE: PRIVATE WATER SYSTEM WITH COMBINED FIRE HYDRANT NETWORK AND POTABLE SERVICES FOR EACH BUILDING.
3. SINGLE CHECK VALVE INSTALLED IN METER VAULT A MINIMUM OF FIVE (5) PIPE DIAMETERS DOWNSTREAM OF METER.
4. LAUNDRY, POOL SERVICES, MAINTENANCE FACILITIES, ETC. MAY REQUIRE ADDITIONAL LOW OR HIGH HAZARD PROTECTION. DEGREE OF HAZARD SHALL BE DETERMINED BY THE OFFICE OF CROSS CONNECTION CONTROL.
5. COORDINATE METER SELECTION AND BACKFLOW PROTECTION REQUIREMENTS WITH THE DEPARTMENT.

METER VAULT NOTES:

1. PROVIDE SENSUS TOUCH READ SYSTEM PIT-LID MODULE IN ACCESS HATCH NEAR HINGE.
2. ALL PIPE IN VAULT TO BE FLANGED DUCTILE IRON CLASS 50 MINIMUM.
3. VAULTS LOCATED IN UNPAVED AREAS AND NOT SUBJECTED TO VEHICULAR TRAFFIC LOADS ARE TO BE FURNISHED WITH AN ALUMINUM ACCESS HATCH WITH STAINLESS STEEL HARDWARE AND ARE TO BE DESIGNED TO SUPPORT 300 PSF LOAD. VAULT TOP SHALL BE SET A MINIMUM OF 2" ABOVE GRADE.
4. VAULTS LOCATED IN PAVED AREAS AND NOT SUBJECTED TO HIGH DENSITY TRAFFIC SHALL BE DESIGNED TO SUPPORT HS-20 (HS-20-44) LIVE LOADS. VAULTS ARE TO BE FURNISHED WITH AN HS-20 RATED ALUMINUM ACCESS HATCH SUITABLE FOR USE IN OFF STREET LOCATIONS WHERE NOT SUBJECTED TO HIGH DENSITY TRAFFIC.
5. CENTER ACCESS HATCH OVER METER.
6. CONCRETE SHALL BE MINIMUM 4000PSI. REINFORCING STEEL SHALL BE ASTM A-615, GRADE 60.
7. ALL VAULTS SHALL BE COATED ON THE EXTERIOR WITH MINIMUM 20 MILS (2 COATS, 10 MILS EACH) OF BITUMASTIC.
8. DEVIATIONS FROM THIS STANDARD SHALL BE ACCOMPANIED BY FULL DESIGN CALCULATIONS BY THE VAULT MANUFACTURER PRIOR TO INSTALLATION.
9. WHERE ADDITIONAL LOW OR HIGH HAZARD BACKFLOW PROTECTION IS REQUIRED, AN APPROVED TESTABLE DOUBLE CHECK VALVE ASSEMBLY (DCVA) OR REDUCED PRESSURE ZONE BACKFLOW PREVENTER ASSEMBLY (RPZ) AS APPLICABLE, SHALL ALSO BE PROVIDED.
10. DCVA AND RPZ SHALL BE INSTALLED ABOVE GRADE, ABOVE THE 100-YEAR FLOOD LEVEL, AND BE PROTECTED FROM FREEZING ON THE OWNER'S PROPERTY.
11. COORDINATE METER SELECTION AND BACKFLOW PROTECTION REQUIREMENTS WITH THE DEPARTMENT.

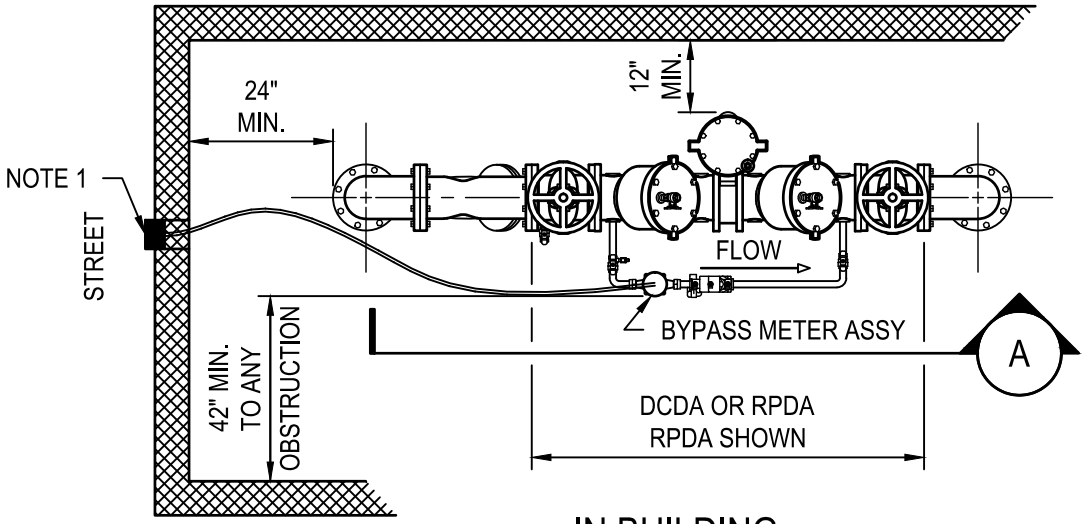

IN BUILDING

NOTE 1:
SENSUS TOUCH READ MODEL 510R NON-PIT SET UNIT 4'0" AFF. PROVIDE 2" PVC CONDUIT IN WALL.

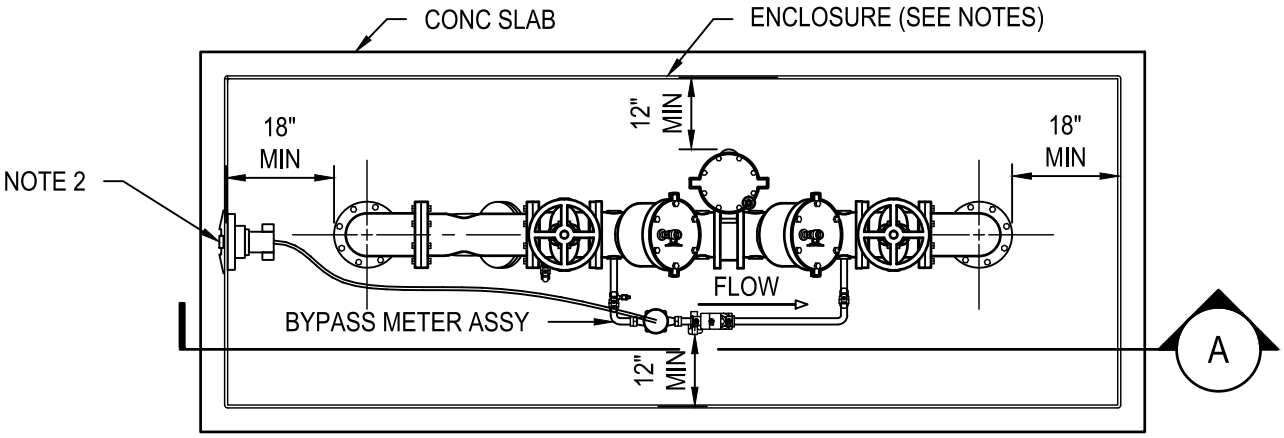

IN ENCLOSURE

NOTE 2:
SENSUS TOUCH READ MOUNT 4'-0" AFF OR AS OTHERWISE REQUIRED BY ENCLOSURE HEIGHT.

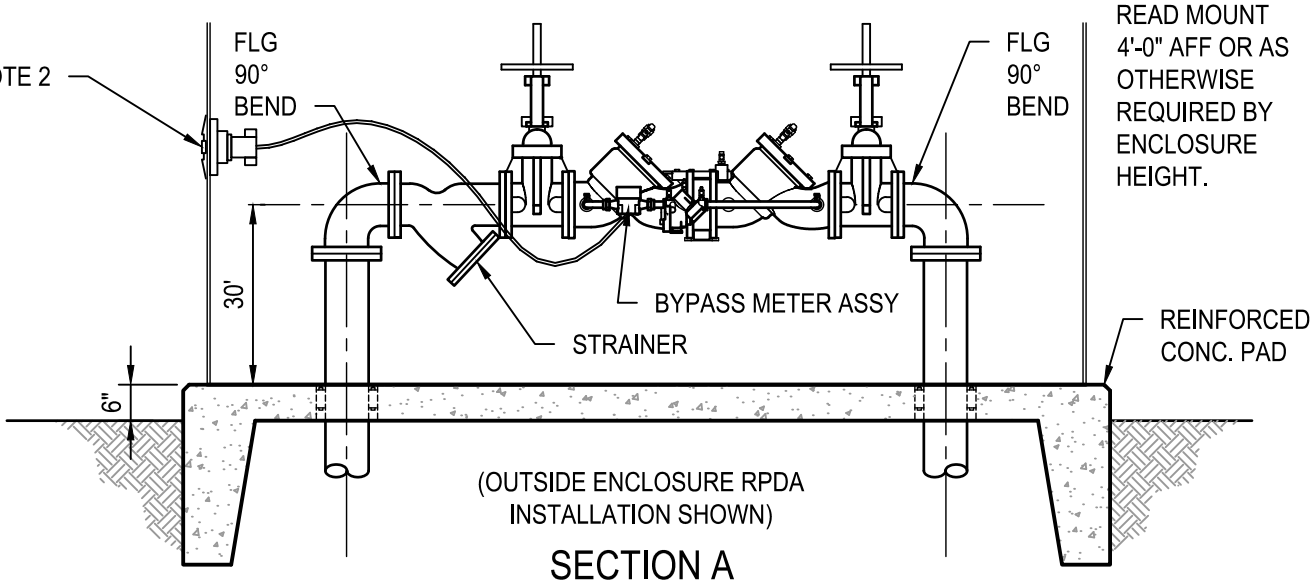

SECTION A

FIRE SERVICE BACKFLOW PREVENTION DETAILS

NOT TO SCALE

REFERENCE	RELEASE 1	CATEGORY	SHEET NO.	DPU DETAIL NO.
PFM Vol. II	2017	WATER	1 of 2	156-1

NOTES - GENERAL:

1. DEGREE OF HAZARD AND SELECTION OF BACKFLOW PROTECTION DEVICE TYPE SHALL BE MADE BY THE DEPARTMENT.
2. BACKFLOW PREVENTER SHALL BE A COMPLETE, TESTABLE ASSEMBLY INCLUDING UL LISTED RESILIENT SEATED OSY SHUTOFF VALVES AND FOUR (4) TEST COCKS.
3. DEVICE SHALL BE INSTALLED ON THE OWNER'S PROPERTY, ABOVE GRADE, ABOVE THE 100-YEAR FLOOD ELEVATION AND BE PROTECTED AGAINST FREEZING.
4. DEVICE SHALL BE INSTALLED INSIDE A BUILDING OR IN A HEATED AND INSULATED FIBERGLASS OR ALUMINUM ENCLOSURE.
5. CONCRETE PAD FOR ENCLOSURE SHALL BE MINIMUM 4000 PSI. REINFORCING STEEL SHALL BE ASTM A-615, GRADE 60, DESIGNED PER ACI-318, LATEST EDITION.
6. ALL PIPE 3-INCHES AND LARGER SHALL BE FLANGED DUCTILE IRON CLASS 50 MINIMUM.
7. PIPE LESS THAN 3-INCHES MAY BE EITHER FLANGED DUCTILE IRON CLASS 50 MINIMUM OR COPPER WITH SCREWED BRASS FITTINGS.
8. REDUCED PRESSURE ZONE AND REDUCED PRESSURE ZONE DETECTOR ASSEMBLIES SHALL INCLUDE A MEANS OF DRAINING THE WATER DISCHARGED THROUGH THE RELIEF VALVE AND SHALL BE OUTFITTED WITH AN AIR GAP FITTING PIPED TO A FLOOR DRAIN, THROUGH A WALL, OR TO AN ENCLOSURE WALL DRAIN PORT.
9. VERTICAL INSTALLATION INSIDE OF BUILDINGS MAY BE ALLOWED.

NOTES - REDUCED PRESSURE ZONE DETECTOR ASSEMBLIES (RPDA) AND DOUBLE CHECK DETECTOR ASSEMBLIES (DCDA):

1. BACKFLOW PROTECTION ASSEMBLY WITH BYPASS METER SHALL BE INSTALLED ON FIRE PROTECTION SYSTEMS WHEN CONNECTED TO A POTABLE WATER SUPPLY THAT IS NOT OTHERWISE METERED.
2. THE ASSEMBLY SHALL INCLUDE AN AUXILIARY BYPASS LINE CONSISTING OF AN APPROVED TESTABLE BACKFLOW PREVENTER AND SENSUS iPERL 3/4"-S TOUCH READ WATER METER .
3. INSTALLATIONS INSIDE OF BUILDINGS SHALL BE CONNECTED TO A SENSUS MODEL 510R TOUCH READ VERSION NON-PIT UNIT SET FLUSH WITH THE OUTSIDE OF THE BUILDING FACING THE PUBLIC STREET, 4'0" AFF. IF THE UNIT CANNOT BE MOUNTED ON A WALL FACING THE PUBLIC STREET, THE UNTIL SHALL BE INSTALLED IN AN OUTDOOR ENCLOSURE AT A LOCATION WHERE THE UNIT IS FACING THE PUBLIC STREET.
4. WATER METER AND TOUCH READ DEVICE ARE THE PROPERTY OF THE DEPARTMENT AND ACCESS TO THESE DEVICES SHALL BE GRANTED BY THE PROPERTY OWNER UPON REQUEST.

FIRE SERVICE BACKFLOW PREVENTION NOTES

NOT TO SCALE

REFERENCE	RELEASE 1	CATEGORY	SHEET NO.	DPU DETAIL NO.
PFM Vol. II	2017	WATER	2 of 2	156-2

City of Suffolk
Public Facilities Manual Volume II

STANDARD DETAILS

This page intentionally left blank.

City of Suffolk
Public Facilities Manual Volume II

STANDARD DETAILS

Series 200 - Sanitary

250: Standard 48” Manhole

251: Standard 60” Diameter Manhole

252: Shallow Precast Concrete Manhole

253: Straddle 48” Manhole

254: Exterior Drop Connection

255: Interior Drop Connection

256: Manhole Rim Adjustment

257: Manhole Invert Shaping

258: Standard Manhole Frame and Cover with Insert

259: Standard Watertight Manhole Frame and Cover

260: Manhole and Pipe Abandonment

261: Force Main Connection to Sanitary Manhole

262: Sanitary Lateral

263: Concrete Anchor

City of Suffolk
Public Facilities Manual Volume II

STANDARD DETAILS

This page intentionally left blank.

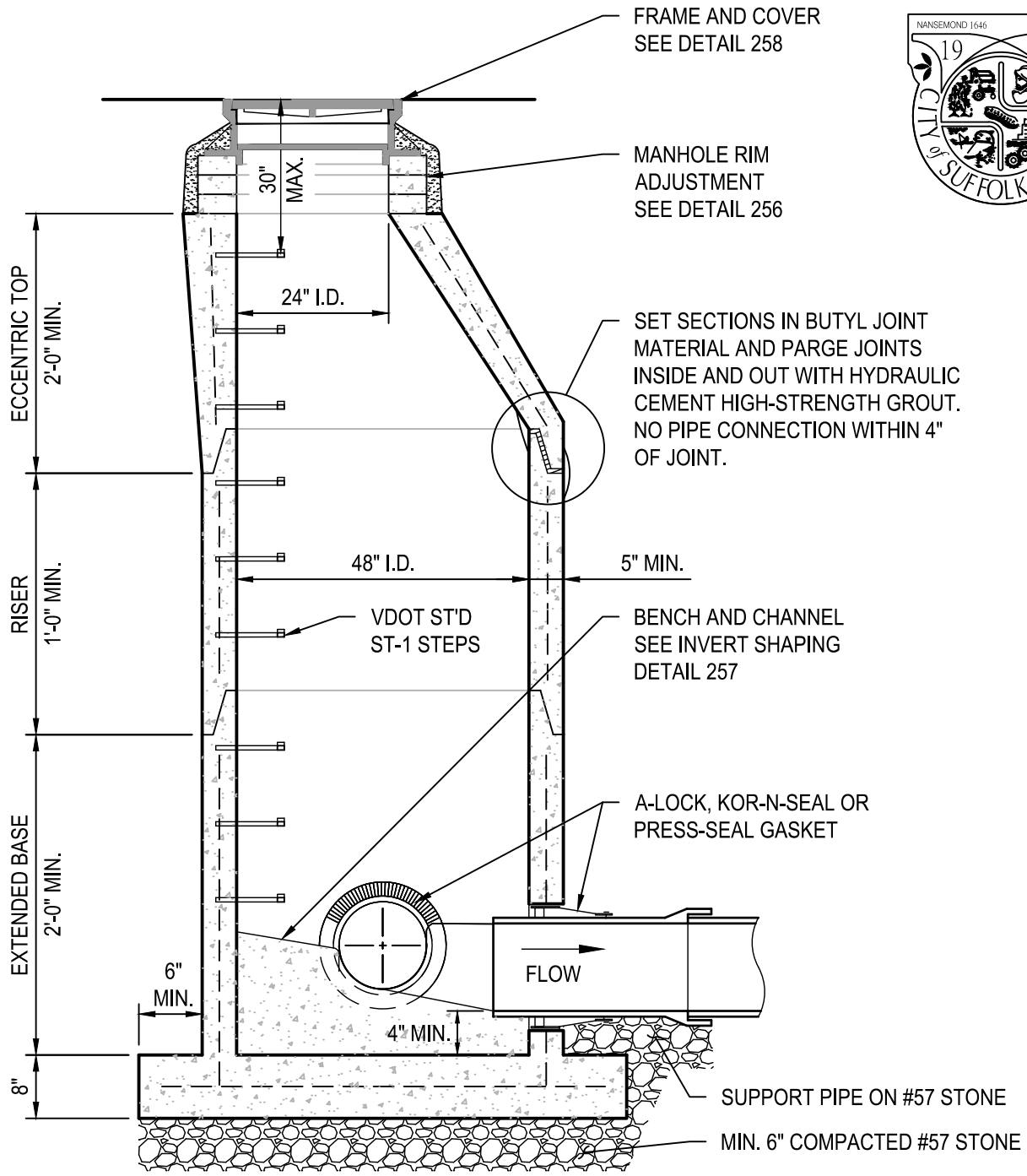

NOTES:

1. MANHOLE AND STEP SPACING TO BE IN COMPLIANCE W/ ASTM C-478.
2. BUTYL JOINT MATERIAL SHALL BE IN COMPLIANCE W/ ASTM C-990.
3. PRECAST LIFT HOLES, IF PROVIDED, SHALL BE PLUGGED W/ HIGH-STRENGTH, NON-SHRINK GROUT TO MAKE WATERTIGHT AFTER INSTALLATION.
4. USE STANDARD 48" MANHOLE FOR DEPTHS UP TO 12.0 FEET AS MEASURED FROM MANHOLE RIM TO INVERT OF LOWEST PIPE.
5. FOR DEPTHS GREATER THAN 12 FEET, OR WHERE PIPE SIZE DICTATES, USE 60" DIAMETER MANHOLE. REFER TO DETAIL 251.
6. MINIMUM 0.10 FOOT DROP FROM INFLUENT INVERTS TO OUT PIPE INVERT.

STANDARD 48" MANHOLE

NOT TO SCALE

REFERENCE	RELEASE 1	CATEGORY	SHEET NO.	DPU DETAIL NO.
PFM Vol. II	2017	SANITARY	1 of 1	250

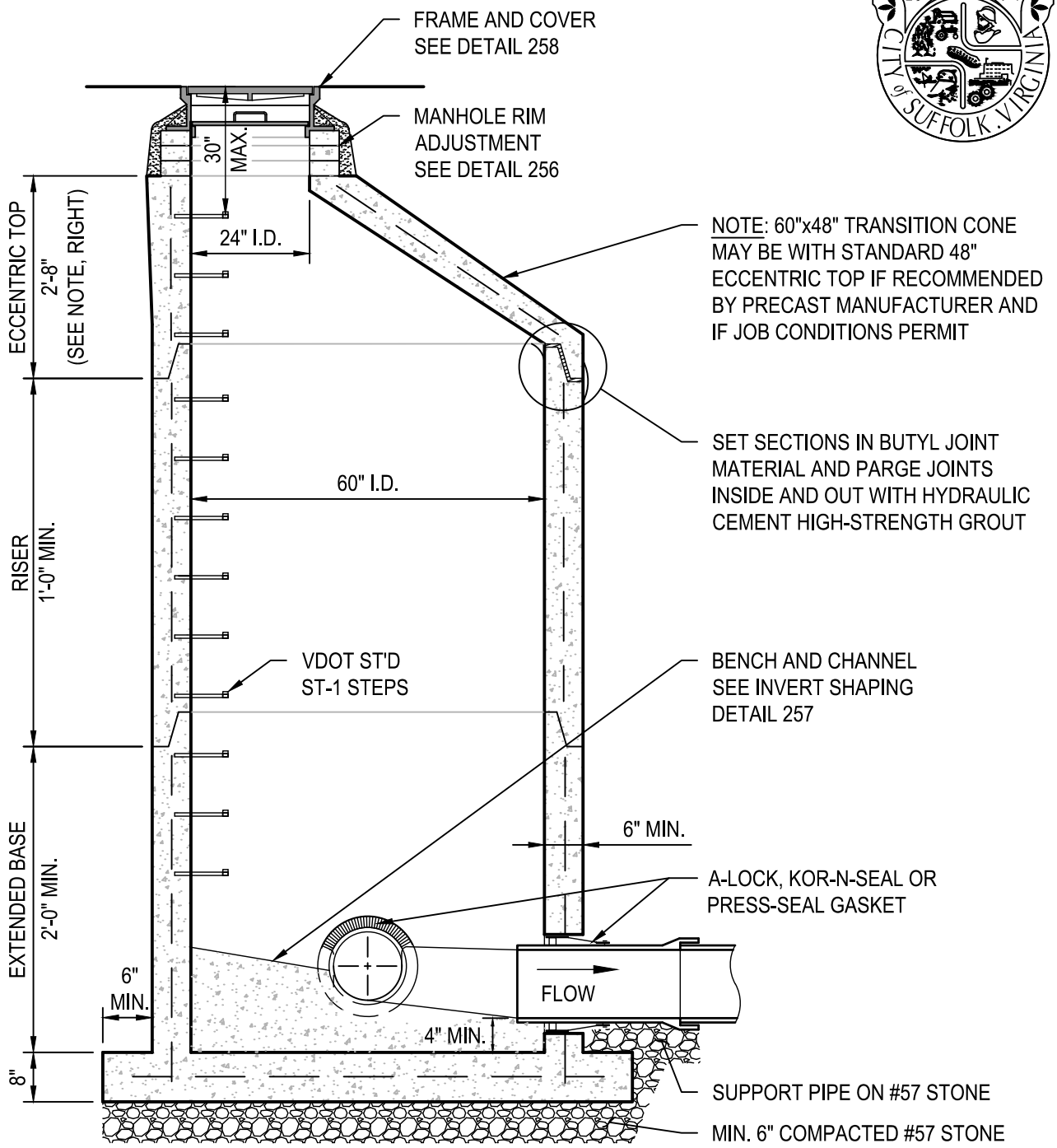

NOTES:

1. MANHOLE AND STEP SPACING TO BE IN COMPLIANCE W/ ASTM C-478.
2. BUTYL JOINT MATERIAL SHALL BE IN COMPLIANCE WITH ASTM C-990.
3. PRECAST LIFT HOLES, IF PROVIDED, SHALL BE PLUGGED W/ HIGH-STRENGTH, NON-SHRINK GROUT TO MAKE WATERTIGHT AFTER INSTALLATION.
4. FOR MANHOLES GREATER THAN 60" DIAMETER SUBMIT FULL DESIGN.
5. MINIMUM 0.10 FOOT DROP FROM INFLUENT INVERTS TO OUT PIPE INVERT.

STANDARD 60" DIAMETER MANHOLE

NOT TO SCALE

REFERENCE	RELEASE 1	CATEGORY	SHEET NO.	DPU DETAIL NO.
PFM Vol. II	2017	SANITARY	1 of 1	251

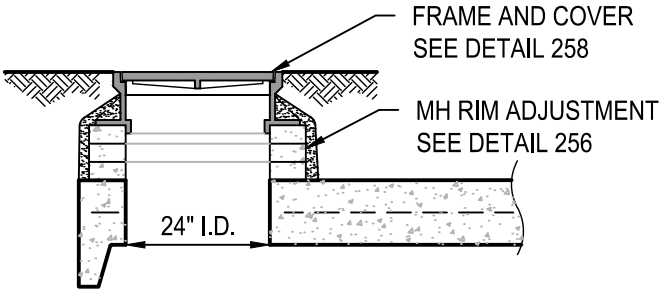

ADJUSTED FRAME AND COVER
SET ON TOP ALTERNATIVE

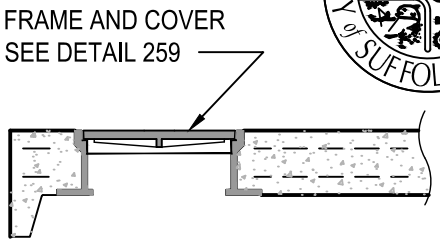

FRAME AND COVER
CAST IN TOP
ALTERNATIVE

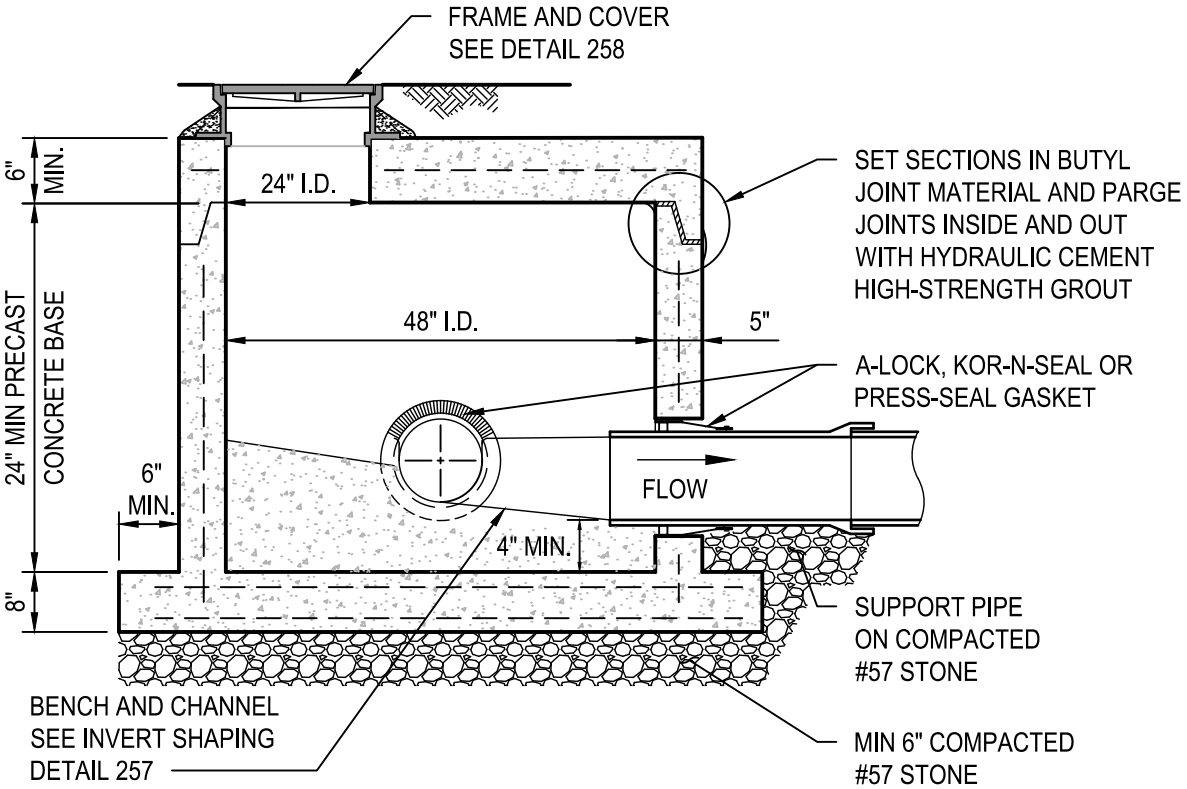

NOTES:

1. MANHOLE AND STEPS TO BE IN COMPLIANCE W/ ASTM C-478.
2. BUTYL JOINT MATERIAL SHALL BE IN COMPLIANCE W/ ASTM C-990.
3. PRECAST LIFT HOLES, IF PROVIDED, SHALL BE PLUGGED W/ HIGH-STRENGTH, NON-SHRINK GROUT TO MAKE WATERTIGHT AFTER INSTALLATION.
4. FOR ADDITIONAL INFORMATION, SEE STANDARD 48" MANHOLE DETAIL 250.
5. FLAT TOP SHALL ONLY BE IN LOCATIONS APPROVED BY DPU.
6. MINIMUM 0.10 FOOT DROP FROM INFLUENT INVERTS TO OUT PIPE INVERT.

SHALLOW PRECAST CONCRETE MANHOLE

NOT TO SCALE

REFERENCE	RELEASE 1	CATEGORY	SHEET NO.	DPU DETAIL NO.
PFM Vol. II	2017	SANITARY	1 of 1	252

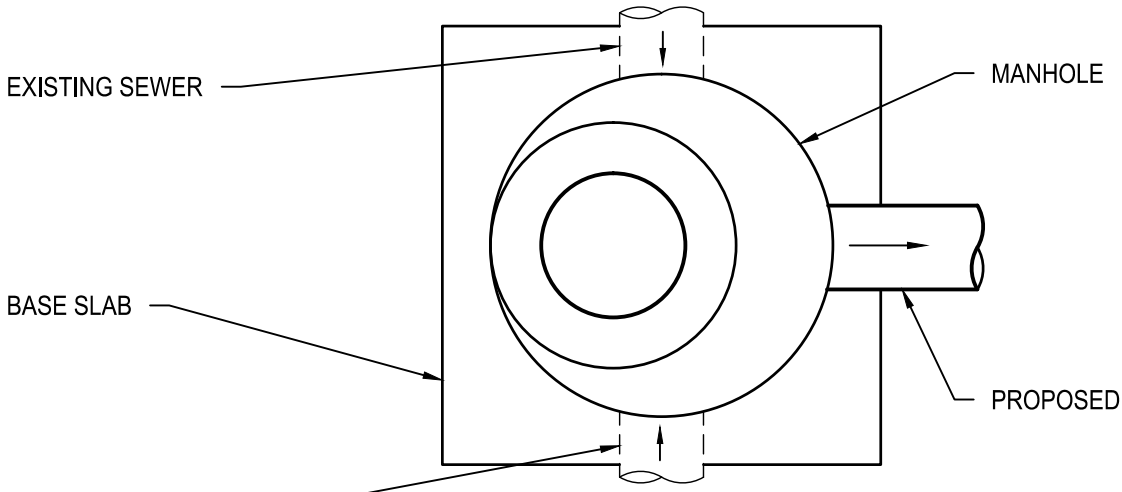

PLAN

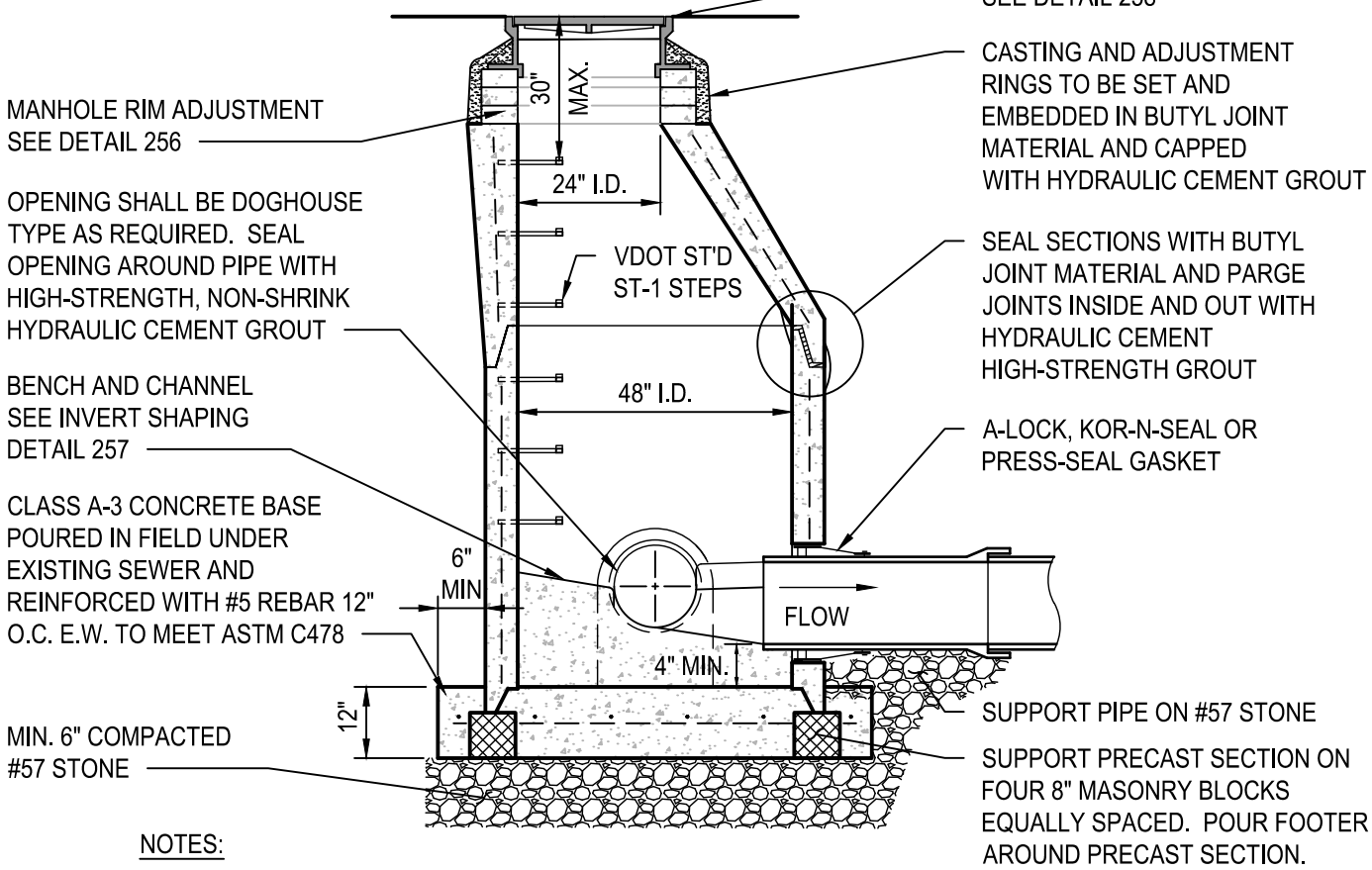

NOTES:

1. TO BE USED ONLY AS APPROVED BY D.P.U.
2. MANHOLE AND STEP SPACING TO BE IN COMPLIANCE W/ ASTM C-478.
3. BUTYL JOINT MATERIAL SHALL BE IN COMPLIANCE WITH ASTM C-990.
4. PRECAST LIFT HOLES, IF PROVIDED, SHALL BE PLUGGED W/ HIGH-STRENGTH, NON-SHRINK GROUT TO MAKE WATERTIGHT AFTER INSTALLATION.
5. FOR ADDITIONAL INFORMATION, SEE STANDARD 48" DIAMETER MANHOLE, DETAIL 250. FOR 60" AND LARGER DIAMETER MANHOLES SEE STANDARD 60" DIAMETER MANHOLE, DETAIL 251.
6. MINIMUM 0.10 FOOT DROP FROM INFLUENT INVERTS TO OUT PIPE INVERT.

STRADDLE 48" MANHOLE

NOT TO SCALE

REFERENCE	RELEASE 1	CATEGORY	SHEET NO.	DPU DETAIL NO.
PFM Vol. II	2017	SANITARY	1 of 1	253

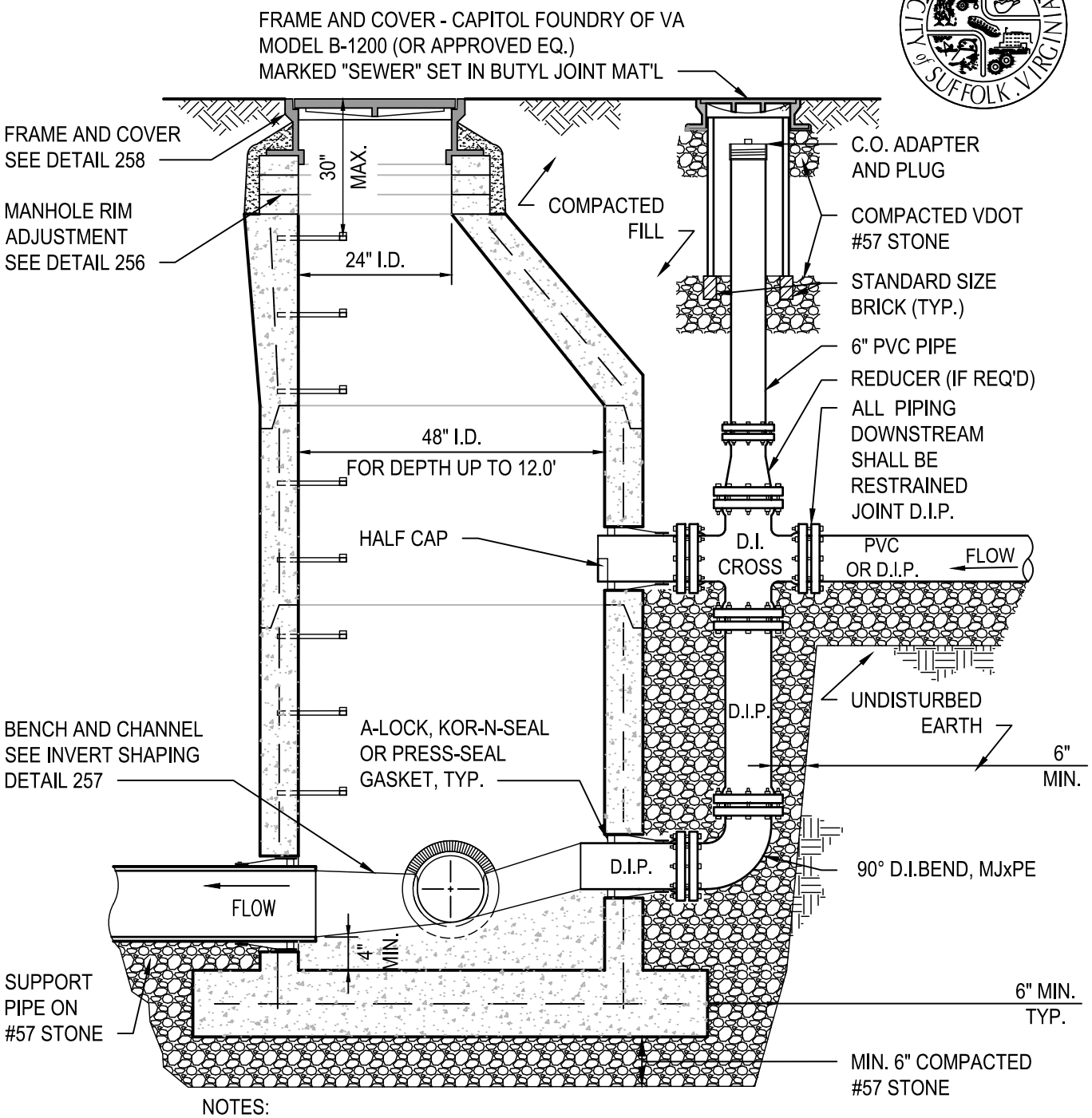

NOTES:

1. USE WHERE DROP IS 24" OR GREATER AND ONLY AS DIRECTED BY DPU.
2. DROP SHALL NOT CONFLICT WITH MANHOLE STEPS.
3. COMPACTED FILL SHALL BE AS PER PFM.
4. DROP PIPE DIAMETER TO BE SAME DIAMETER AS INFLUENT LINE.
5. ALL DROP CONNECTION PIPING SHALL BE M.J. DUCTILE IRON.
6. FOR ADDITIONAL INFORMATION, SEE STANDARD DETAILS 250 AND 251.
7. MINIMUM 0.10 FOOT DROP FROM INFLUENT INVERTS TO OUT PIPE INVERT.

EXTERIOR DROP CONNECTION

NOT TO SCALE

REFERENCE	RELEASE 1	CATEGORY	SHEET NO.	DPU DETAIL NO.
PFM Vol. II	2017	SANITARY	1 of 1	254

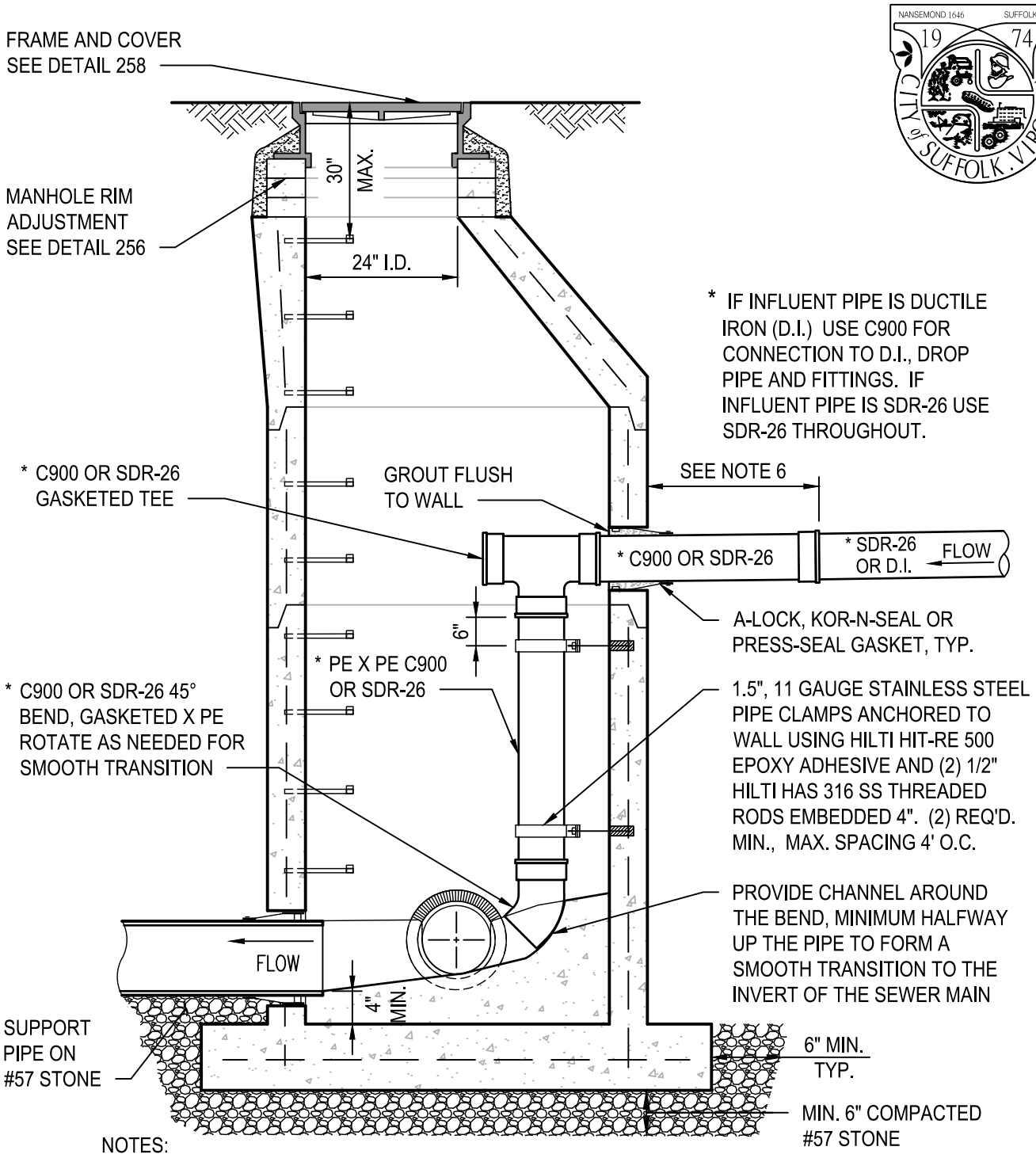

NOTES:

1. USE WHERE DROP IS 24" OR GREATER.
2. DROP SHALL NOT CONFLICT WITH MANHOLE STEPS.
3. COMPACTED FILL SHALL BE AS PER PFM.
4. DROP PIPE DIAMETER SHALL MATCH INFLUENT PIPE SIZE.
5. PROVIDE 60" I.D. MANHOLE, SEE STANDARD DETAIL 251 FOR ADDITIONAL INFORMATION.
6. 3'-0" FOR DUCTILE IRON/C900 TRANSITION ONLY. FULL LENGTH FOR SDR-26.
7. MINIMUM 0.10 FOOT DROP FROM INFLUENT INVERTS TO OUT PIPE INVERT.

INTERIOR DROP CONNECTION

NOT TO SCALE

REFERENCE	RELEASE 1	CATEGORY	SHEET NO.	DPU DETAIL NO.
PFM Vol. II	2017	SANITARY	1 of 1	255

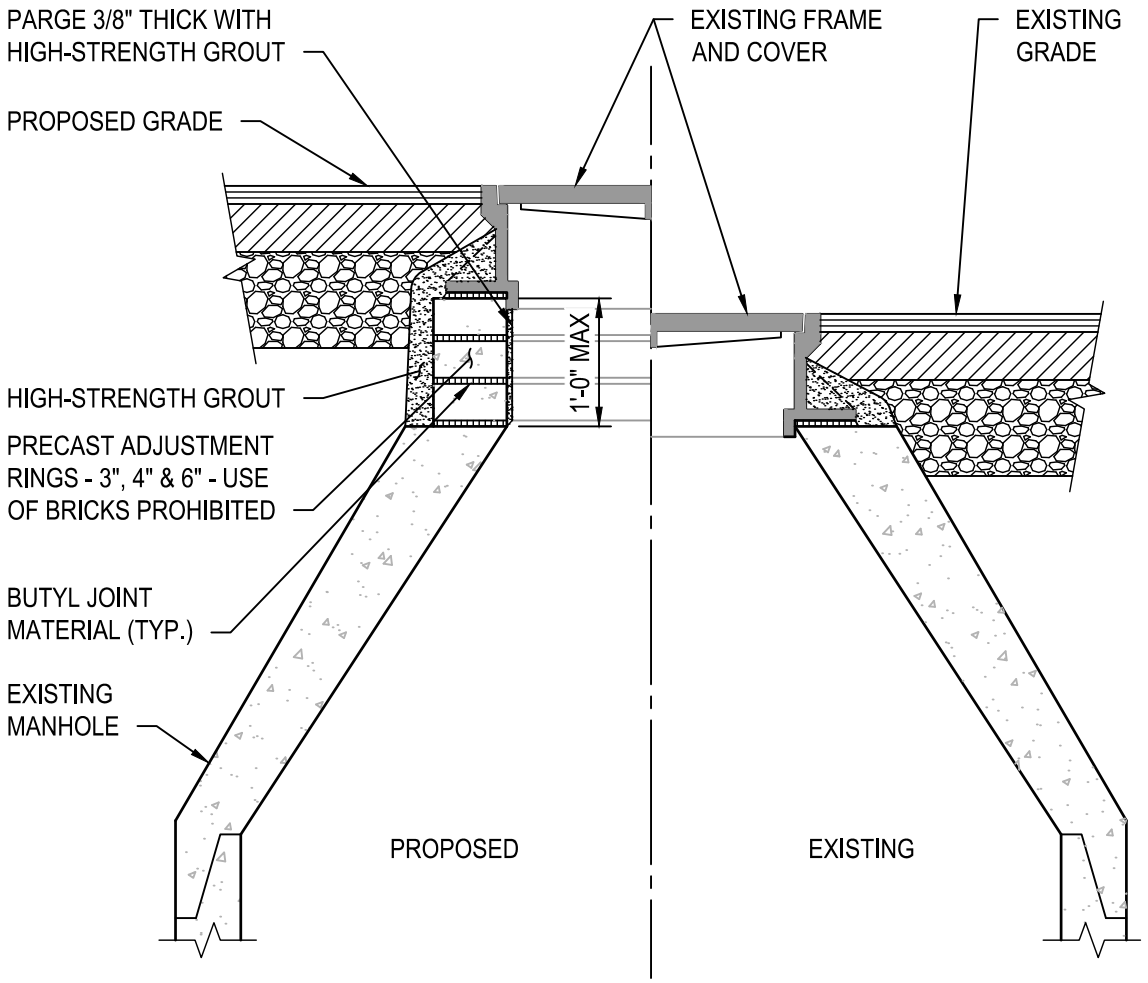

NOTE: PROVIDE HDPE TAPERED ADJUSTMENT RINGS OR EQUAL WHERE GRADE DICTATES.

MANHOLE RIM ADJUSTMENT

NOT TO SCALE

REFERENCE	RELEASE 1	CATEGORY	SHEET NO.	DPU DETAIL NO.
PFM Vol. II	2017	SANITARY	1 of 1	256

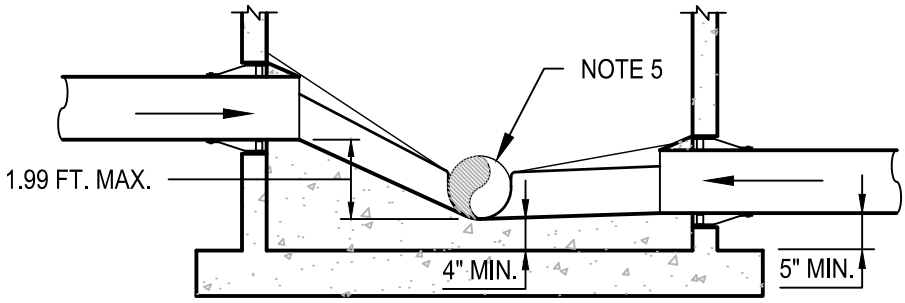

SECTION A-A

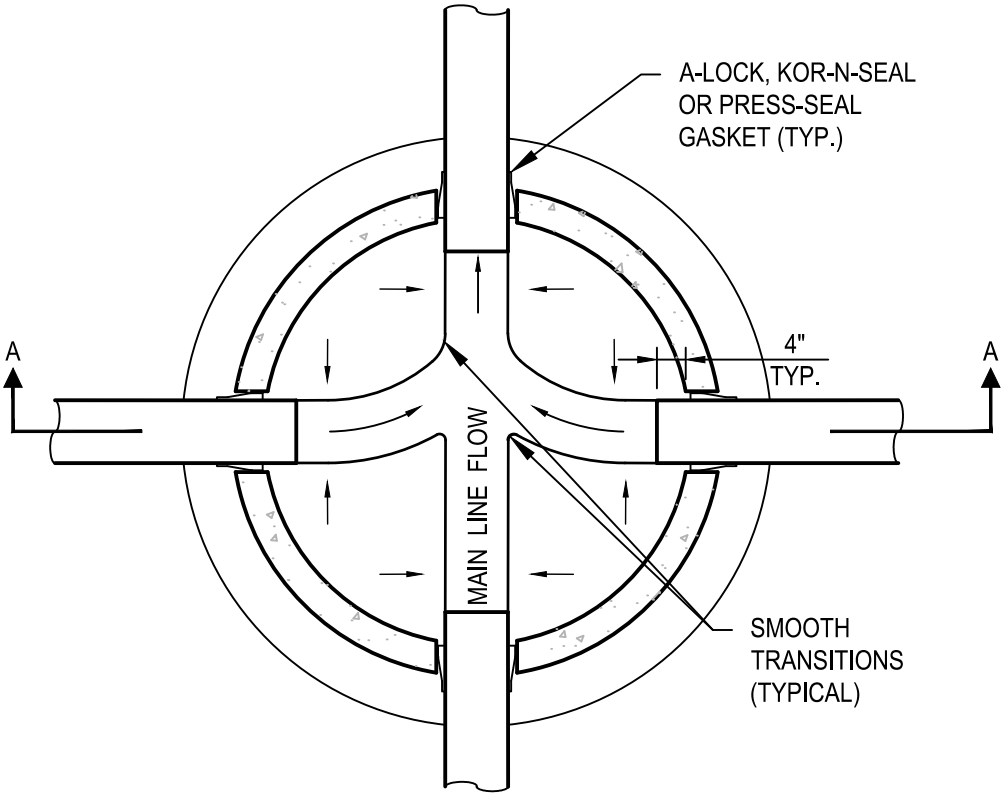

NOTES:

1. INVERT CHANNEL WIDTH SHALL BE EQUAL TO THE INSIDE DIAMETER OF THE CONTRIBUTING SEWER . DEPTH SHALL BE 3/4 OF THE DIAMETER OF THE CONTRIBUTING SEWER.
2. SLOPE BENCH TOWARDS CHANNEL AT 2" PER FOOT MIN.
3. BENCH AND CHANNEL SHALL BE 3000 PSI CONCRETE OR HIGH-STRENGTH, NON-SHRINK HYDRAULIC CEMENT GROUT.
4. PROVIDE GROUT ABOVE PROTRUDING PIPES IN MANHOLE.
5. MINIMUM 0.10 FOOT DROP FROM INFLUENT INVERTS TO OUT PIPE INVERT.

MANHOLE INVERT SHAPING

NOT TO SCALE

REFERENCE	RELEASE 1	CATEGORY	SHEET NO.	DPU DETAIL NO.
PFM Vol. II	2017	SANITARY	1 of 1	257

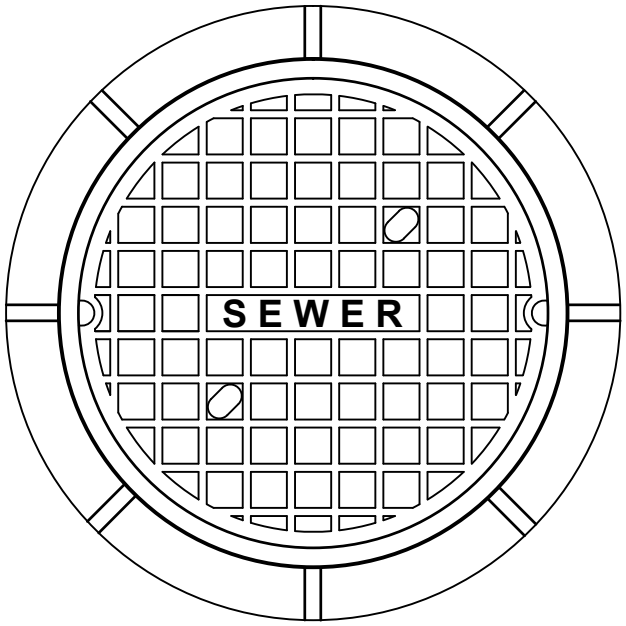

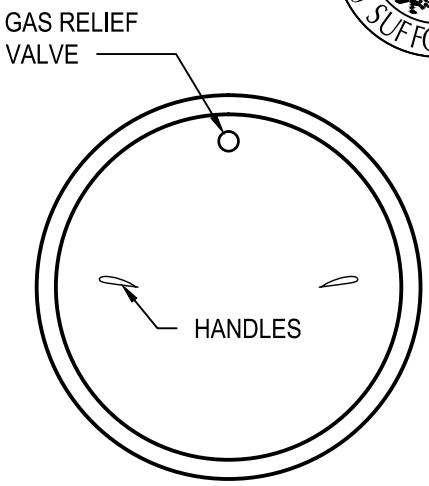

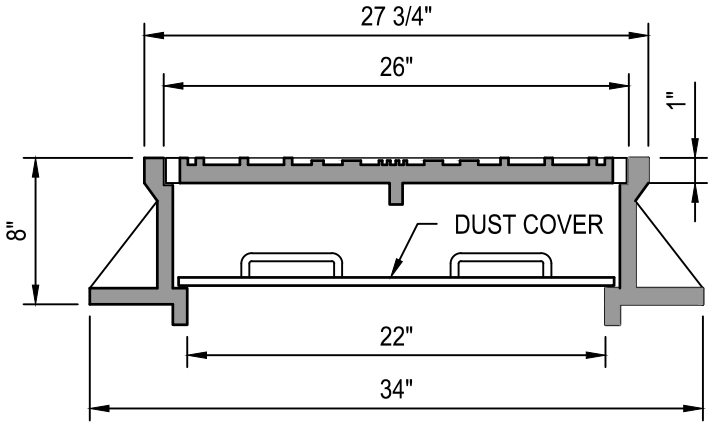

DUST COVER

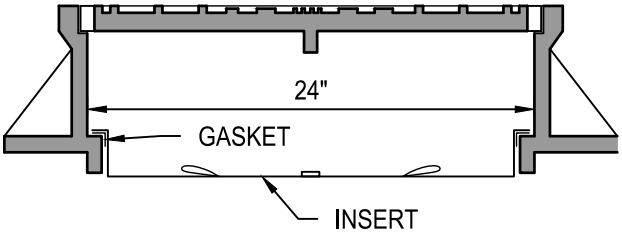

ALTERNATIVE INSERT

NOTES:

1. FRAME AND COVER BY CAPITOL FOUNDRY MODEL C-21-Y (OR APPROVED EQUAL) MARKED "SEWER"

2. MANHOLE INSERT TO BE PARSON ENVIRONMENTAL STAINLESS STEEL WITH GAS RELIEF VALVE, CLOSED-CELL NEOPRENE GASKET AND (2) PLASTIC COATED STAINLESS STEEL CABLE HANDLES OR APPROVED EQUAL.

3. PROVIDE MANHOLE INSERT AS ALTERNATIVE TO DUST COVER IN ALL LOCATIONS POTENTIALLY SUBJECT TO FLOODING OR AS DIRECTED BY DPU.

STANDARD MANHOLE FRAME AND COVER WITH INSERT

NOT TO SCALE

REFERENCE	RELEASE 1	CATEGORY	SHEET NO.	DPU DETAIL NO.
PFM Vol. II	2017	SANITARY	1 of 1	258

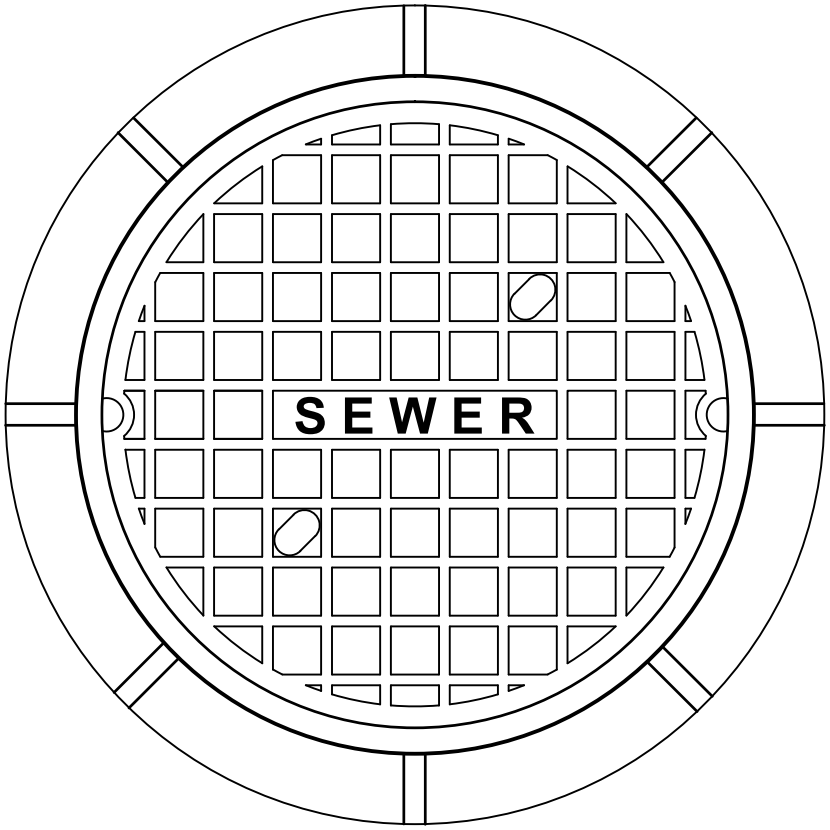

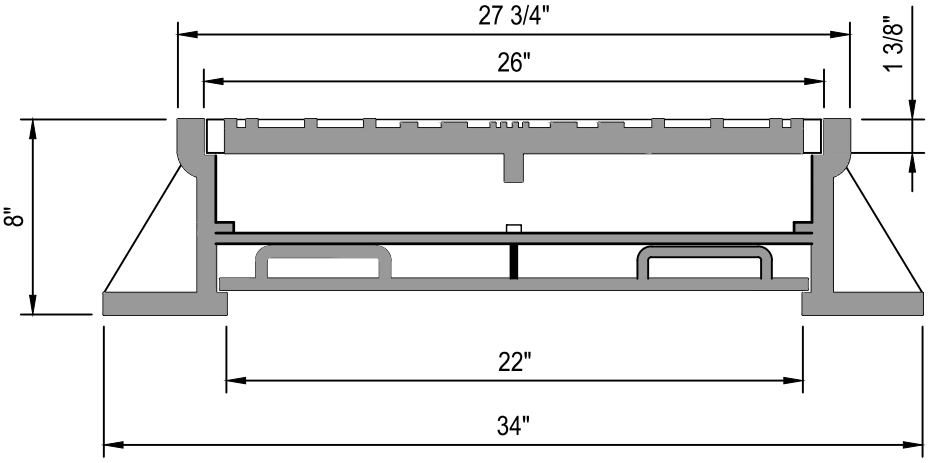

NOTES:

1. FRAME AND COVER BY CAPITOL FOUNDRY MODEL C-21-Y*WT (OR APPROVED EQUAL) MARKED "SEWER".
2. PROVIDE IN AREAS SUBJECT TO FLOODING OR LOCATIONS AS DIRECTED BY DPU.

STANDARD WATERTIGHT MANHOLE FRAME AND COVER

NOT TO SCALE

REFERENCE	RELEASE 1	CATEGORY	SHEET NO.	DPU DETAIL NO.
PFM Vol. II	2017	SANITARY	1 of 1	259

PROVIDE METHOD OF ABANDONMENT TO DPU.

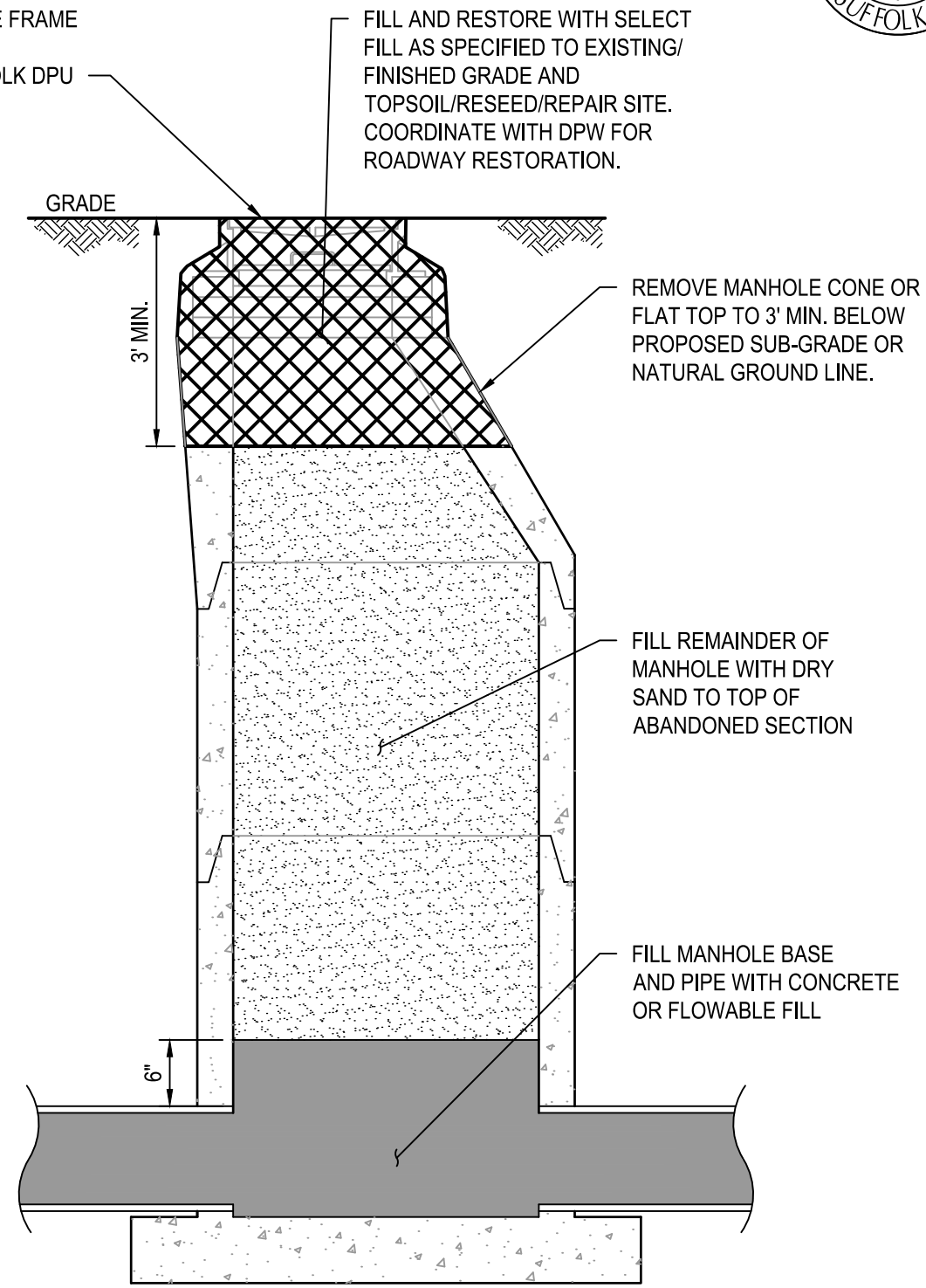

MANHOLE AND PIPE ABANDONMENT

NOT TO SCALE

REFERENCE	RELEASE 1	CATEGORY	SHEET NO.	DPU DETAIL NO.
PFM Vol. II	2017	SANITARY	1 of 1	260

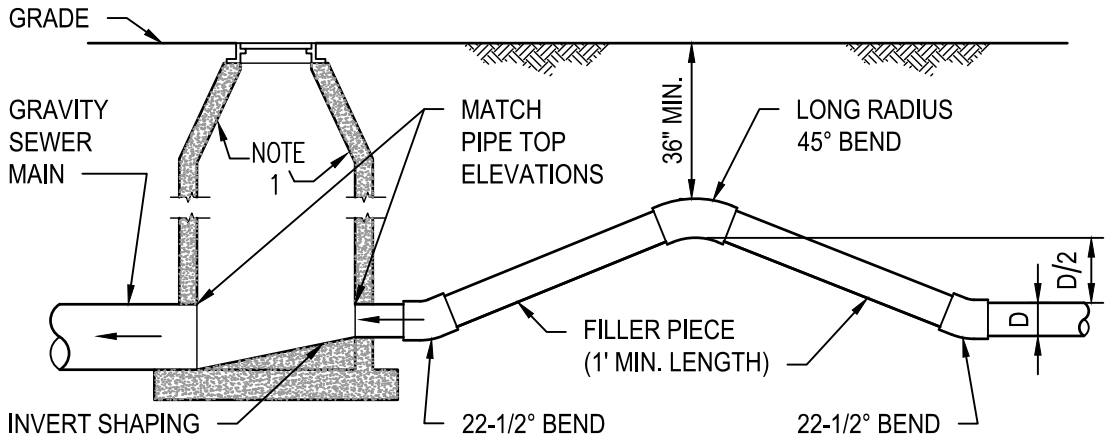

DISCHARGE INTO MANHOLE

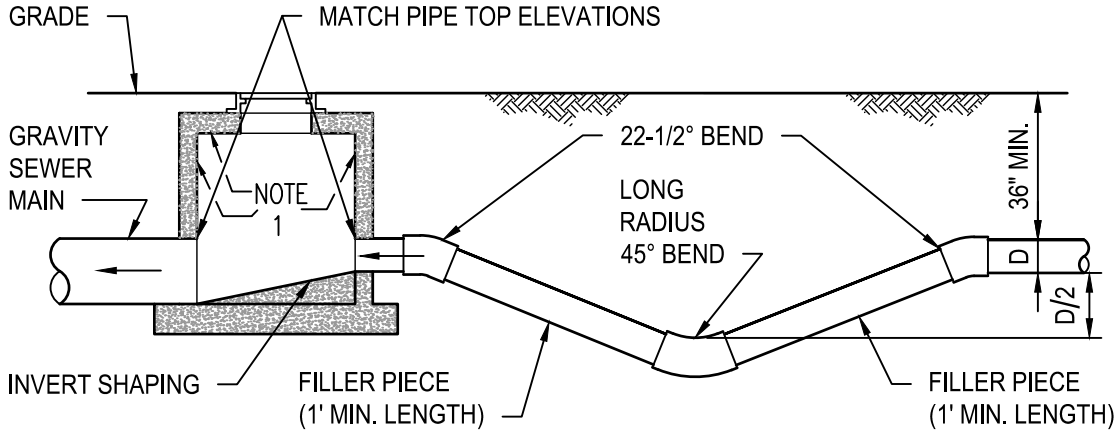

DISCHARGE INTO SHALLOW MANHOLE

NOTES:

1. PROVIDE PROTECTIVE MANHOLE LINING TO FORCE MAIN DISCHARGE MANHOLE AND NEXT DOWNSTREAM MANHOLE. WHEN THERE IS MORE THAN ONE DOWNSTREAM MANHOLE WITHIN 400 FEET FROM FORCE MAIN DISCHARGE MANHOLE, CONSULT WITH THE CITY OF SUFFOLK DPU FOR ADDITIONAL REQUIREMENTS.
2. SEE CITY OF SUFFOLK DPU APPROVED PRODUCT LIST FOR ACCEPTABLE MANHOLE LINING PRODUCTS.

FORCE MAIN CONNECTION TO SANITARY MANHOLE

NOT TO SCALE

REFERENCE	RELEASE 1	CATEGORY	SHEET NO.	DPU DETAIL NO.
PFM Vol. II	2017	SANITARY	1 of 1	261

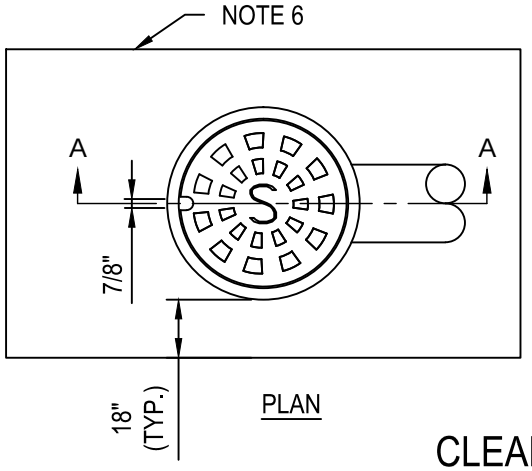

PLAN

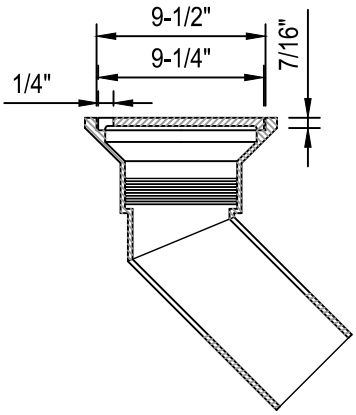

SECTION A-A

CLEANOUT

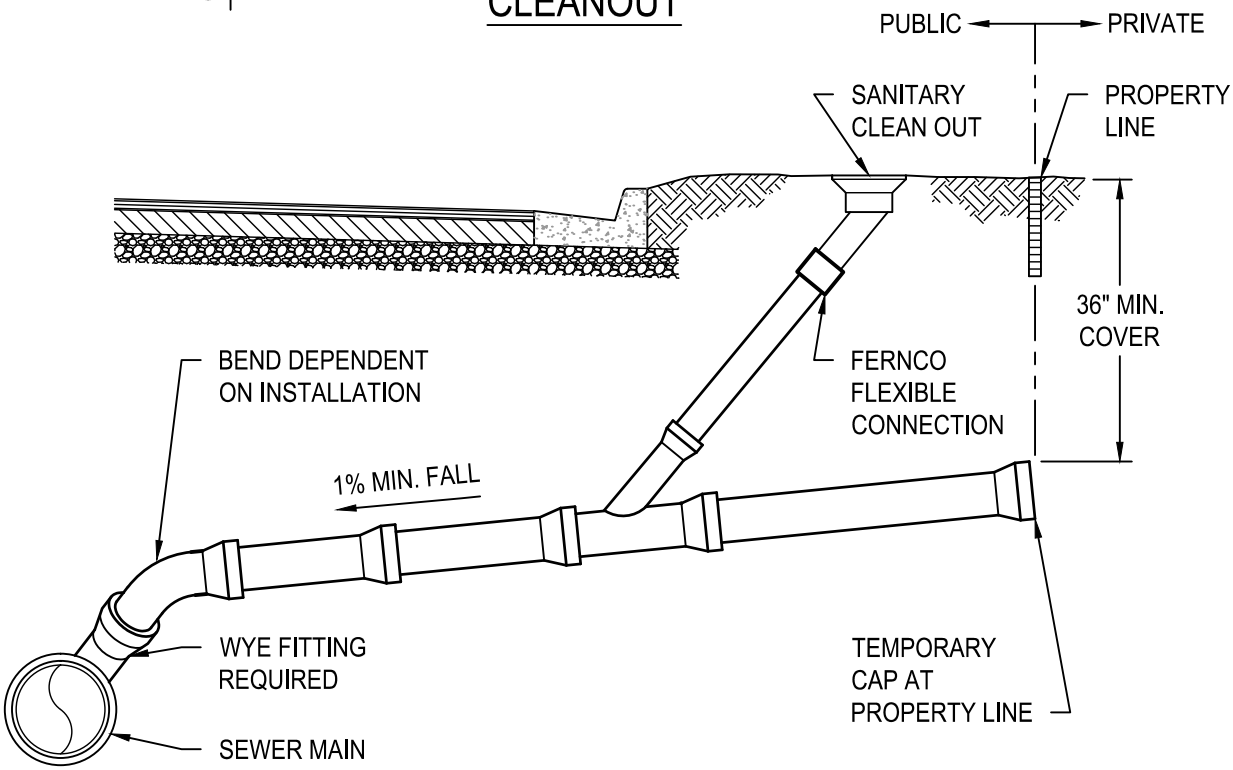

NOTES:

1. SINGLE CLEAN OUT (CAPITOL FOUNDRY ITEM # 110T-CO OR EQUAL) WITH LID MARKED "S" AND PLASTIC THREADED PLUG. CLEAN OUT CASTING TO BE CONNECTED TO 4" RISER PIPE WITH FERNCO FLEXIBLE COUPLING OR APPROVED EQUAL.
2. LATERAL SHALL BE ORIENTED AT 90° TO THE SEWER MAIN.
3. PIPE SIZE FOR COMMERCIAL SERVICE LATERALS SHALL BE DETERMINED BY FLOW CALCULATIONS AND APPROVED BY DPU (TYPICALLY 6" DIAMETER).
4. CLEAN OUT SHALL BE LOCATED IN RIGHT-OF-WAY, 1'-0" FROM PROPERTY LINE. OBSTRUCTIONS OR CONFLICTS WILL BE EVALUATED BY CITY ON A CASE BY CASE BASIS.
5. LATERAL MATERIAL SHALL MATCH SEWER MAIN, UNLESS DIRECTED OTHERWISE BY DPU.
6. WHEN CLEANOUT IS LOCATED WITHIN DRIVEWAY, PROVIDE AN ISOLATION JOINT USING 1/2-INCH PREMOLDED JOINT FILLER 18" AROUND OUTSIDE DIAMETER OF CLEANOUT TO FACILITATE FUTURE MAINTENANCE.

SANITARY LATERAL

NOT TO SCALE

REFERENCE	RELEASE 1	CATEGORY	SHEET NO.	DPU DETAIL NO.
PFM Vol. II	2017	SANITARY	1 of 1	262

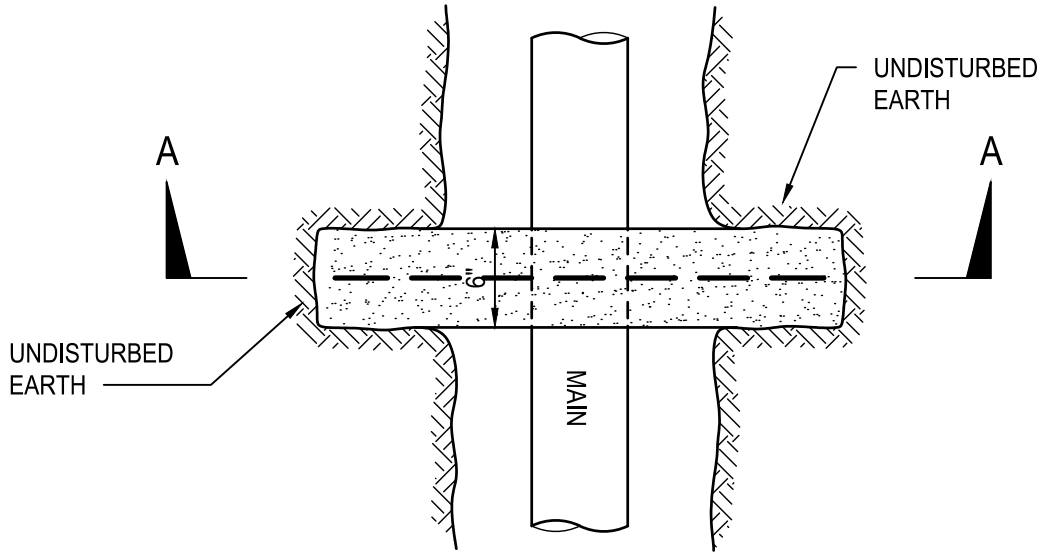

PLAN

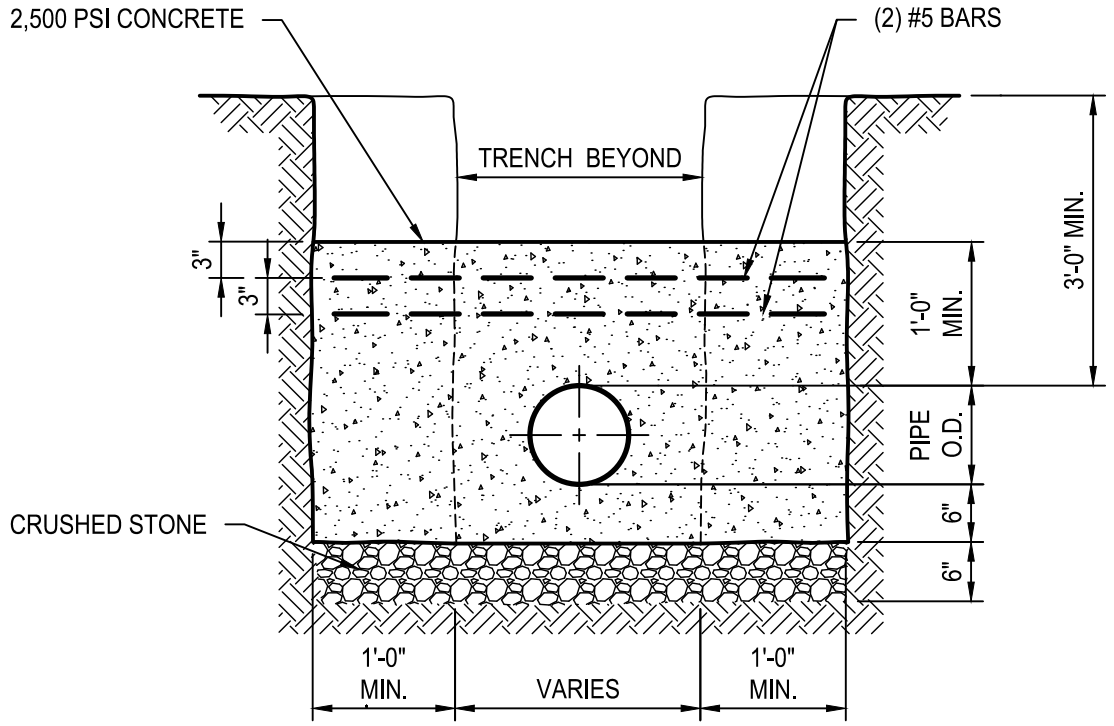

SECTION A-A

NOTE: NUMBER OF ANCHORS REQUIRED IS DESIGN ENGINEER'S RESPONSIBILITY.

CONCRETE ANCHOR

NOT TO SCALE

REFERENCE	RELEASE 1	CATEGORY	SHEET NO.	DPU DETAIL NO.
PFM Vol. II	2017	SANITARY	1 of 1	263

City of Suffolk
Public Facilities Manual Volume II

STANDARD DETAILS

Series 300 - Water and Sanitary

350: Valve Box

351: Manual Air Release Assembly

352-1: Water and Sewer Line Casing Detail

352-2: Water and Sewer Line Casing Requirements

353: Pipe Encasement Detail

354-1: Trench and Pipe Bedding Detail

354-2: Trench and Pipe Bedding Notes

City of Suffolk
Public Facilities Manual Volume II

STANDARD DETAILS

This page intentionally left blank.

NOTES:

1. PROVIDE MIDDLE SECTION TO EXTEND FOR DEEP BOXES.
2. ADJUST BOX TOP FOR STREET PAVEMENT OVERLAY, IF OVERLAY IS PERFORMED.
3. VALVES SHALL OPEN TURNING TO THE LEFT.
4. FOR DEEP APPLICATIONS USE PVC PIPE EXTENSION (WITH BELL BELOW VALVE BOX).

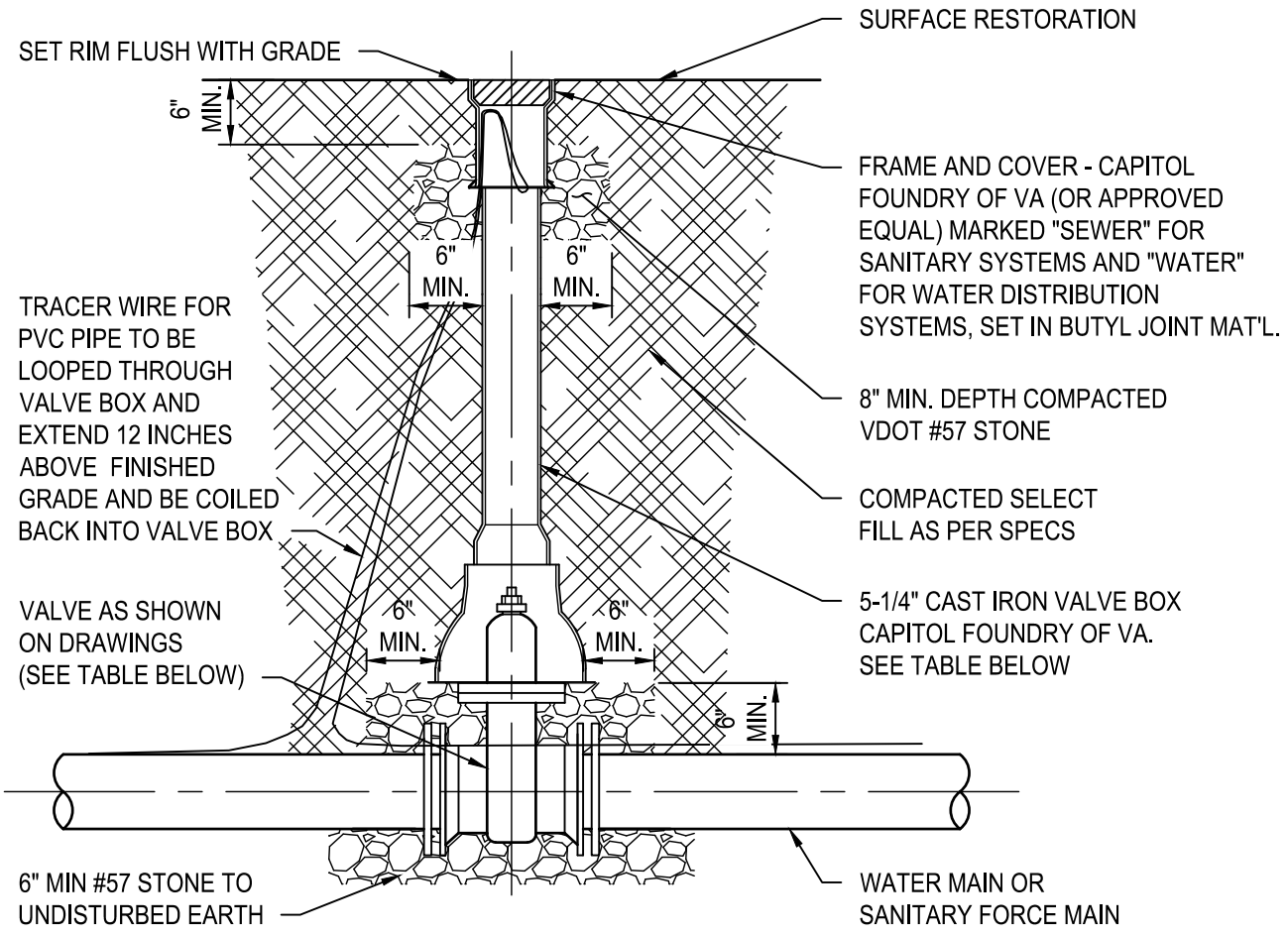

VALVE GUIDE		
APPLICATION	SIZE AND TYPE	
	2" - 12"	> 12"
SANITARY	GATE	GATE
WATER	GATE	BUTTERFLY

VALVE BOX GUIDE			
MODEL #	BOX COMPLETE EXTENSION	TOP SECTION LENGTHS	BOTTOM SECTION LENGTHS
461A	19" - 22"	10"	15"
562A	27" - 37"	16"	24"
564A	39" - 50"	16"	36"
664A	39" - 60"	26"	36"
LONGER BOXES MADE BY ADDING EXTENSION TO MODEL # 664A			

VALVE BOX

NOT TO SCALE

REFERENCE	RELEASE 1	CATEGORY	SHEET NO.	DPU DETAIL NO.
PFM Vol. II	2017	WATER AND SANITARY	1 of 1	350

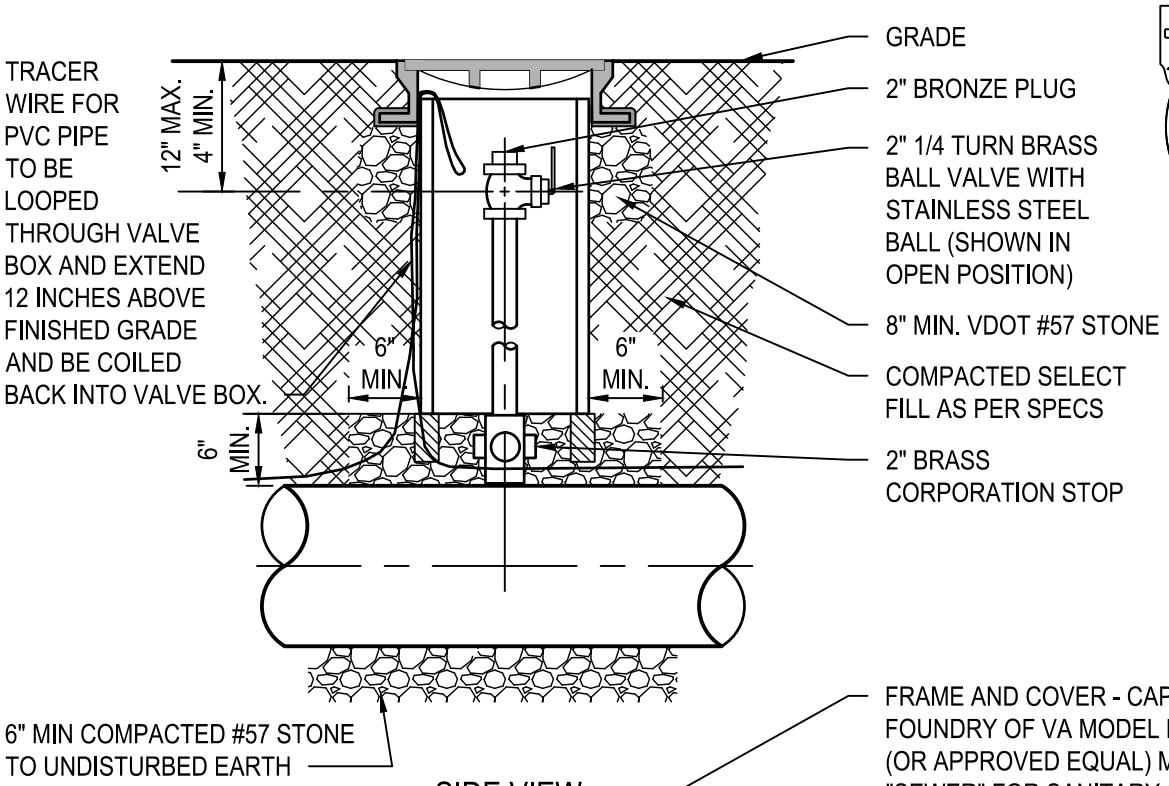

SIDE VIEW

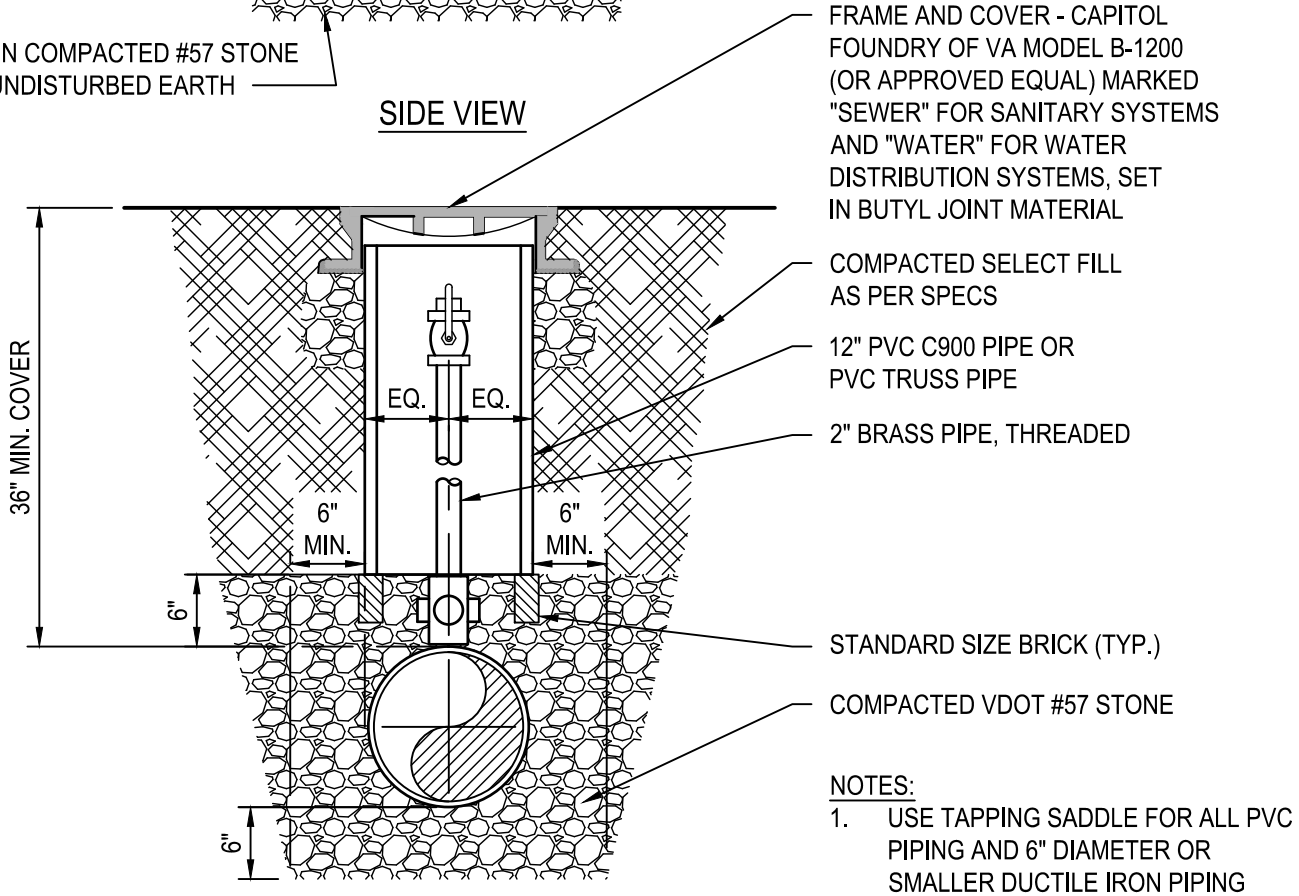

SECTION VIEW

NOTES:

1. USE TAPPING SADDLE FOR ALL PVC PIPING AND 6" DIAMETER OR SMALLER DUCTILE IRON PIPING
2. USE DIRECT TAP FOR 8-INCH OR LARGER DUCTILE IRON PIPE.

MANUAL AIR RELEASE ASSEMBLY

NOT TO SCALE

REFERENCE	RELEASE 1	CATEGORY	SHEET NO.	DPU DETAIL NO.
PFM Vol. II	2017	WATER AND SANITARY	1 of 1	351

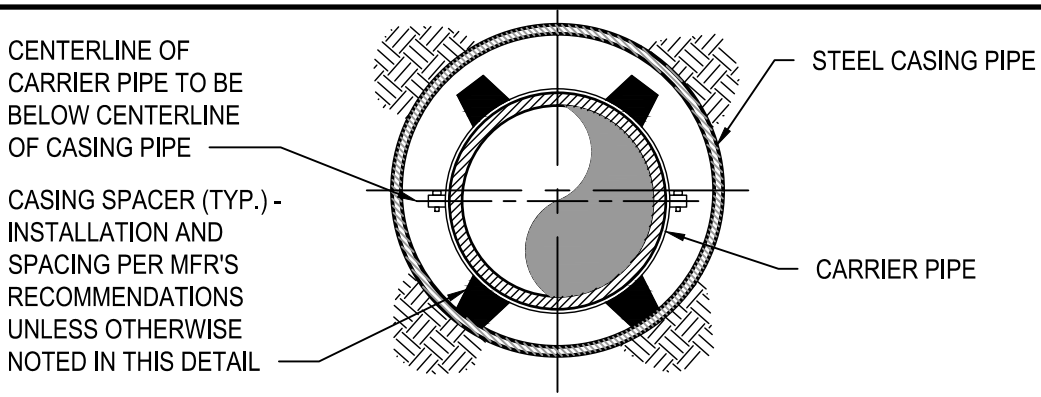

CROSS-SECTION

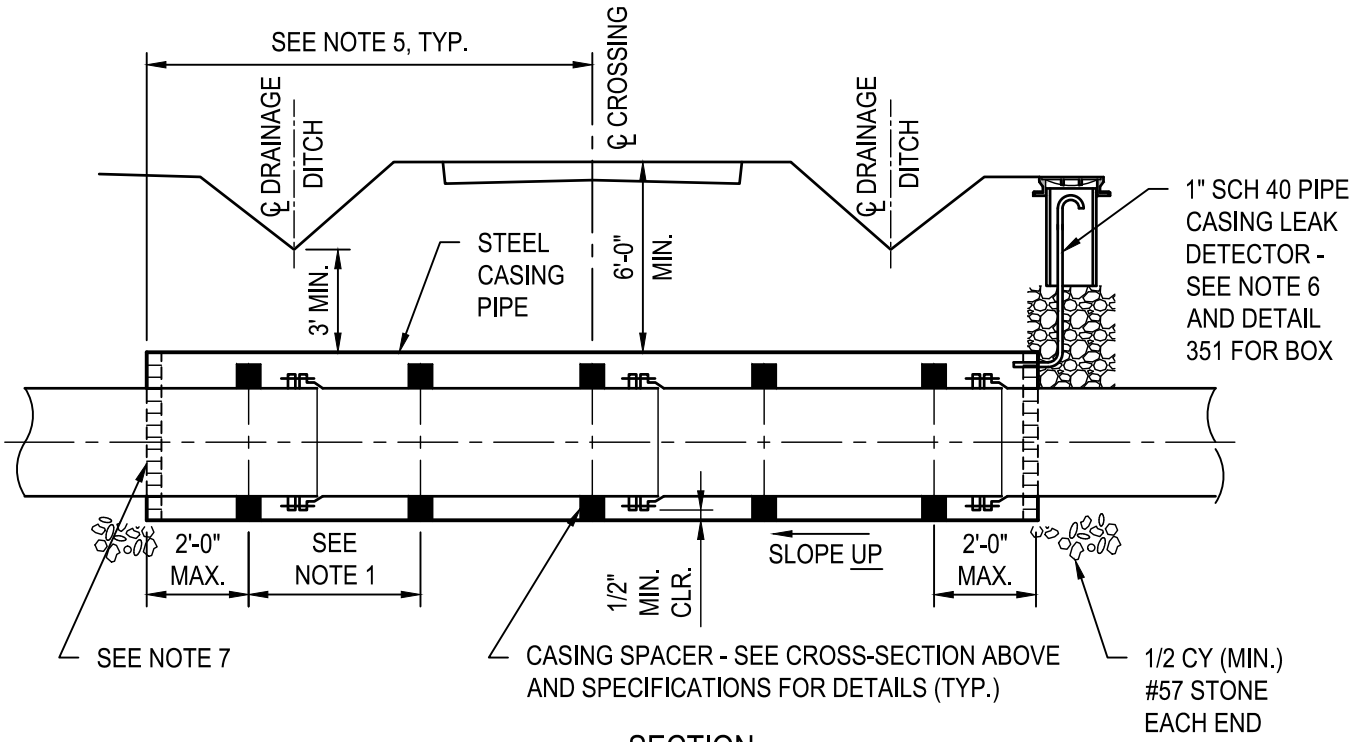

SECTION

NOTES:

1. PROVIDE FOUR-POINT CASING PIPE SUPPORT FOR EACH PIPELINE SECTION (SEE TABLE, SHEET 2 0F 2). INSIDE SPACERS SHALL BE CENTERED BETWEEN OUTSIDE SPACERS, OUTSIDE SPACERS SHALL BE 1'-0" FROM JOINT.
2. CARRIER PIPE SHALL BE RESTRAINED MECHANICAL JOINT DUCTILE IRON PIPE THROUGH CASING AND EXTENDING ONE FULL JOINT OUTSIDE EACH END OF CASING.
3. FOR CASING SIZES AND ALLOWABLE MATERIALS, SEE FOLLOWING TABLE ON SHEET 2 0F 2.
4. PROVIDE STAINLESS STEEL SPACERS WITH ULTRA-HIGH MOLECULAR WEIGHT POLYETHYLENE RUNNERS (CASCADE WATERWORKS MANUFACTURING MODEL CCS OR EQUAL).
5. CASING PIPE SHALL EXTEND TO THE GREATER OF THE FOLLOWING DISTANCES:
   - 2' BEYOND TOE OF SLOPE
   - 3' BEYOND DITCH
   - MIN. OF 5' BEYOND EDGE OF ASPHALT
   - MIN. OF 25' FROM CENTER LINE OF CROSSING.
6. PROVIDE LEAK DETECTOR ON LOW END OF CASING.
7. 8" THICK BRICK AND MORTAR END SEAL.

WATER AND SEWER LINE CASING DETAIL

NOT TO SCALE

REFERENCE	RELEASE 1	CATEGORY	SHEET NO.	DPU DETAIL NO.
PFM Vol. II	2017	WATER AND SANITARY	1 of 2	352-1

CASING PIPE REQUIREMENTS			
CARRIER PIPE DIA.	MINIMUM CASING PIPE DIA.	CASING PIPE MINIMUM WALL THICKNESS (STEEL PIPE WITH PROTECTIVE COATING)	MINIMUM NUMBER OF RUNNERS PER CASING SPACER
4"	12"	0.375	4
6"	18"	0.375	4
8"	18"	0.375	4
10"	20"	0.375	4
12"	24"	0.375	4
16"	30"	0.500	4
18"	30"	0.500	4
20"	36"	0.563	4
24"	42"	0.625	4

NOTES:

1. SLOPE CASING PIPE AT MIN. GRADE OF 1/16" PER FOOT.
2. CONTRACTOR SHALL SUBMIT CALCULATIONS VERIFYING THE ADEQUACY OF THE CASING PIPE TO RESIST THE INSTALLATION LOADS FOR THE METHODS, EQUIPMENT, AND ADVANCE RATES PLANNED.
3. WELDED STEEL PIPE SHALL MEET THE REQUIREMENTS OF ASTM A-139, GRADE B WITH MINIMUM YIELD STRENGTH OF 35,000 P.S.I.
4. PROVIDE CATHODIC PROTECTION WHERE REQUIRED.
5. WELDING SHALL BE BY CERTIFIED WELDER BY AMERICAN WELDING SOCIETY AND AMERICAN INSTITUTE OF STEEL CONSTRUCTION.
6. FOR OPEN-CUT INSTALLATION OF CASING PIPES PROVIDE TRENCH CONSTRUCTION PER DETAIL 355.

WATER AND SEWER LINE CASING REQUIREMENTS

NOT TO SCALE

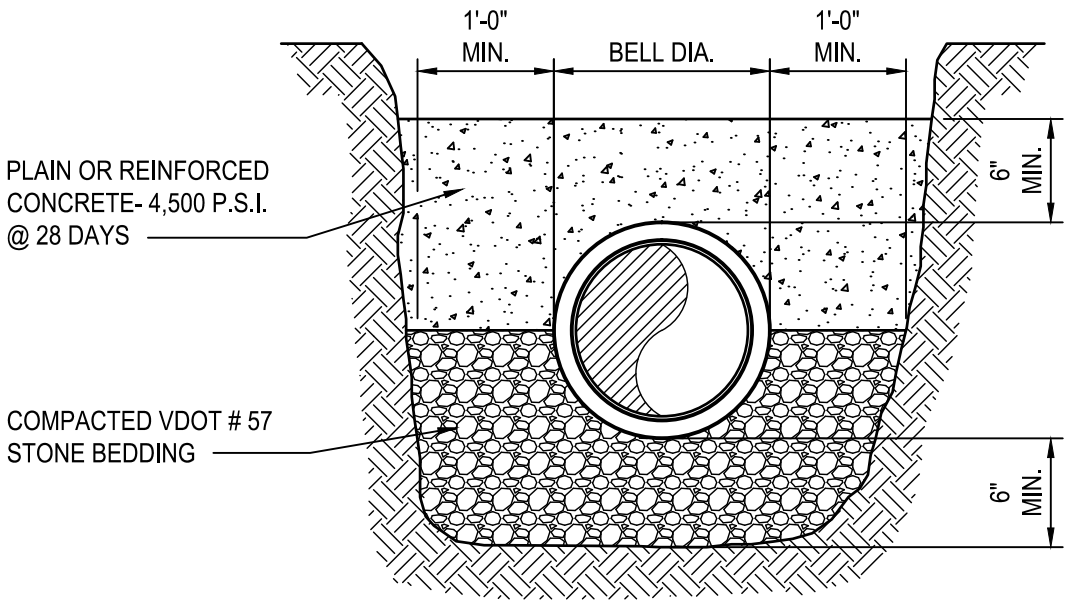

CONCRETE CAP

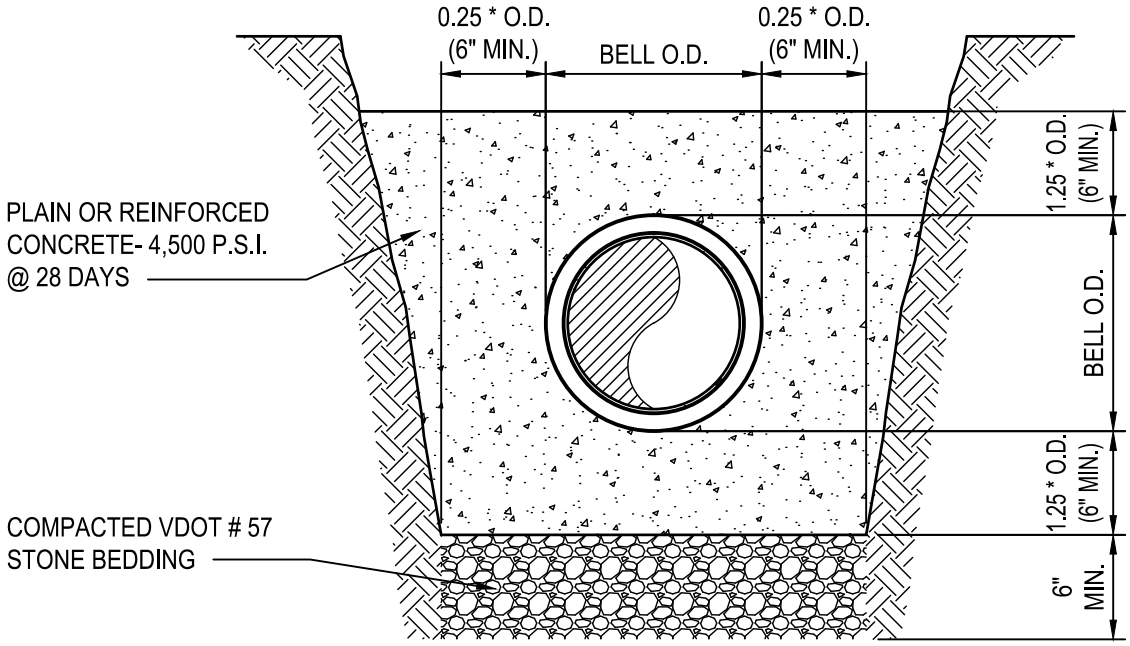

CONCRETE ENCASEMENT

NOTES:

1. CONCRETE ENCASEMENT OR CAP SHALL BE PLACED WHERE INDICATED OR DIRECTED BY THE AUTHORIZED CITY REPRESENTATIVE OR AGENT.
2. CONCRETE SHALL BE 4,500 P.S.I. (MIN.) AT 28 DAYS IN ACCORDANCE WITH ACI-318-08.
3. PIPE SHALL BE BRACED HORIZONTALLY AND VERTICALLY PRIOR TO CONCRETE POUR.
4. PIPING SHALL BE DUCTILE IRON.
5. REINFORCING MAY BE REQUIRED IN SOME LOCATIONS. LOAD CONDITIONS WILL DETERMINE SIZES AND SPACING. ENGINEER SHALL SUBMIT DESIGN CALCULATIONS WITH DETAILS.

PIPE ENCASEMENT DETAIL

NOT TO SCALE

REFERENCE	RELEASE 1	CATEGORY	SHEET NO.	DPU DETAIL NO.
PFM Vol. II	2017	WATER AND SANITARY	1 of 1	353

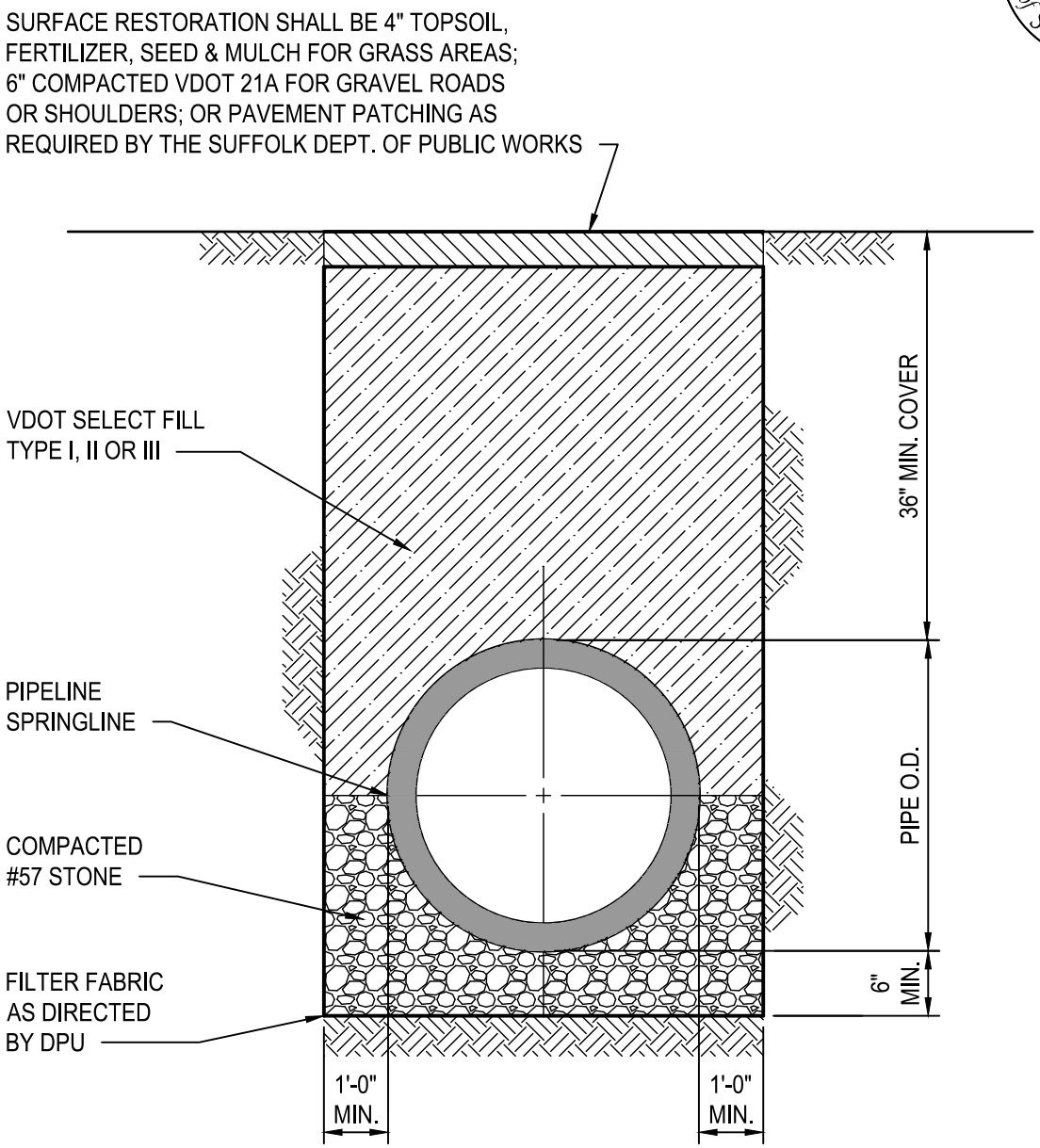

NOTES:

1. TRENCH AND PIPE BEDDING SHALL BE IN ACCORDANCE WITH EARTHWORK SPECIFICATIONS.
2. BELL HOLES SHALL BE HAND SHAPED SO THAT ONLY PIPE BARREL RECEIVES BEARING PRESSURE.
3. PLACE BEDDING TO ENSURE THERE ARE NO VOIDS UNDER OR ALONG PIPE.
4. TRENCH SHALL BE CLEAR OF WATER OR DEBRIS PRIOR TO PLACING BEDDING.
5. COORDINATE PAVEMENT PATCHING REQUIREMENTS WITH DEPARTMENT OF PUBLIC WORKS.
6. CERTIFICATION OF COMPACTION SHALL BE SUBMITTED FROM A GEOTECHNICAL ENGINEERING FIRM.

TRENCH AND PIPE BEDDING DETAIL

NOT TO SCALE

REFERENCE	RELEASE 1	CATEGORY	SHEET NO.	DPU DETAIL NO.
PFM Vol. II	2017	WATER AND SANITARY	1 of 2	354-1

NOTES:

1. BEDDING FOR PIPE AND STRUCTURES AND OVER EXCAVATION FILL DUE TO THE PRESENCE OF UNSUITABLE MATERIAL SHALL BE COMPACTED VDOT NO. 57 STONE.

2. ONLY SELECT FILL MEETING THE REQUIREMENTS OF VDOT SELECT FILL TYPE I, TYPE II OR TYPE III WILL BE ALLOWED TO BE PUT BACK IN THE TRENCH OR USED AS BACKFILL. ON-SITE MATERIAL SHALL NOT BE USED FOR BACKFILL UNLESS IT CAN BE SHOWN TO MEET THE REQUIREMENTS OF SELECT FILL AS DESCRIBED HEREIN AND AS CERTIFIED BY A LICENSED GEOTECHNICAL ENGINEER. IF ON-SITE MATERIAL IS UTILIZED, THE FREQUENCY OF CERTIFICATION SHALL BE AS DIRECTED BY THE CITY.

3. SELECT FILL MATERIAL SHALL BE WITHIN 2% ABOVE OR BELOW THE OPTIMUM MOISTURE CONTENT FOR THE MATERIAL WHILE PLACING AND DURING COMPACTION. AFTER EACH LAYER HAS BEEN PLACED, MIXED AND SPREAD EVENLY, IT SHALL BE THOROUGHLY COMPACTED TO NOT LESS THAN 95% OF ITS MAXIMUM DRY DENSITY AS DETERMINED BY ASTM D698 (STANDARD PROCTOR TEST).

4. SELECT FILL MATERIAL PLACED IN UNIMPROVED AREAS 10 FEET AND BEYOND STRUCTURES, ROADWAYS, PIPES OR OTHER IMPROVED AREAS SHALL BE COMPACTED TO NOT LESS THAN 90% OF ITS MAXIMUM DRY DENSITY AS DETERMINED BY ASTM D698 (STANDARD PROCTOR TEST).

5. FREQUENCY OF COMPACTION TESTING SHALL BE AS REQUIRED BY THE GEOTECHNICAL ENGINEER AND AS APPROVED BY THE DEPARTMENT.

TRENCH AND PIPE BEDDING NOTES

City of Suffolk
Public Facilities Manual Volume II

STANDARD DETAILS

This page intentionally left blank.

City of Suffolk
Public Facilities Manual Volume II

STANDARD DETAILS

Series 400 – Pumping Stations

450: Emergency Pump Connection

451: Pressure Sensor Tap for Pump Station Force Main

452: Pump Station Stilling Well and Level Transducer

453: Pump Station Signs

454-1: Private Grinder Pump Station

454-2: Private Grinder Pump Station Force Main Connection to City Force Main

454-3: Private Grinder Pump Station Force Main Connection to Gravity System

455-1: Control Room Exhaust Fan Panel Elevation

455-2: Control Room Exhaust Fan Control Panel Schematic

456: Generic Electrical Riser Diagram

457-1: Pump Station Entrance Panel Enclosure Elevation

457-2: Pump Station Entrance Panel Back Panel Elevation

458: Check Valve Proximity Switch Mounting Detail

City of Suffolk
Public Facilities Manual Volume II

STANDARD DETAILS

This page intentionally left blank.

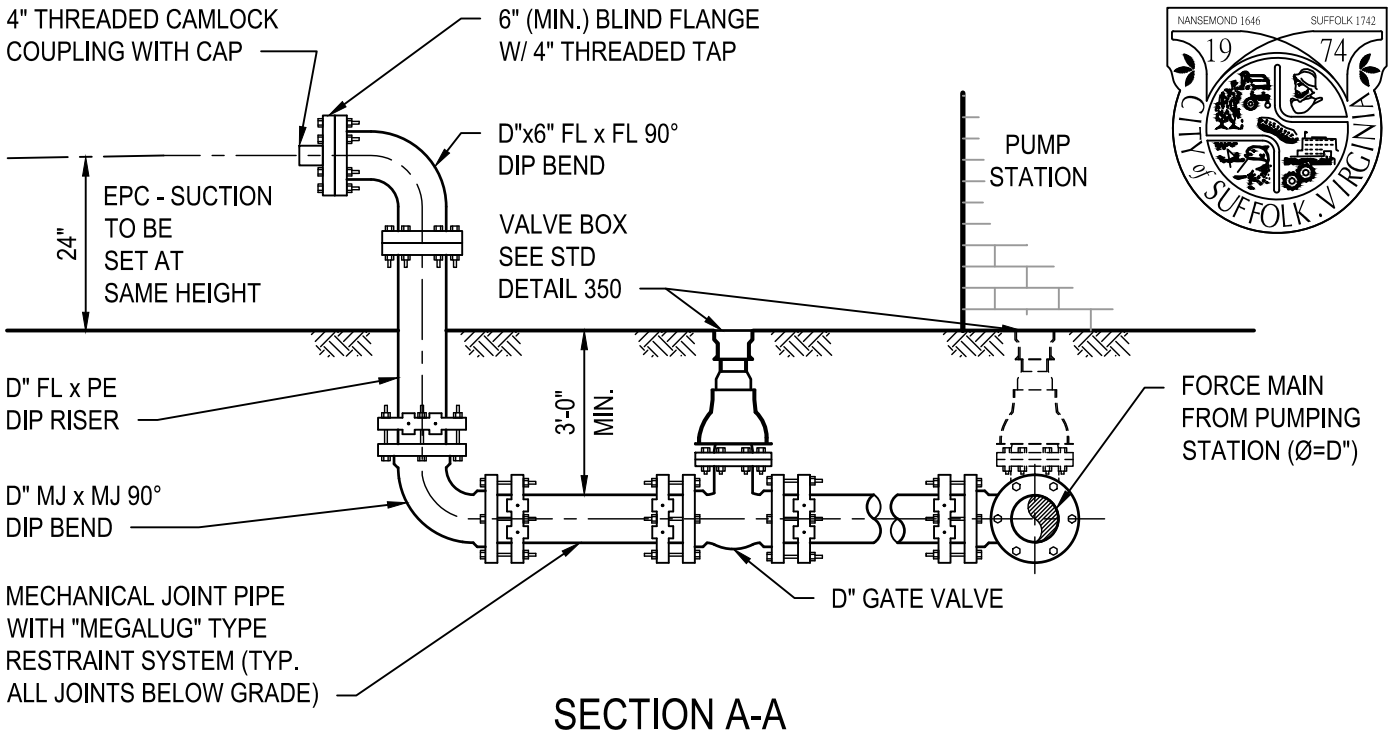

SECTION A-A

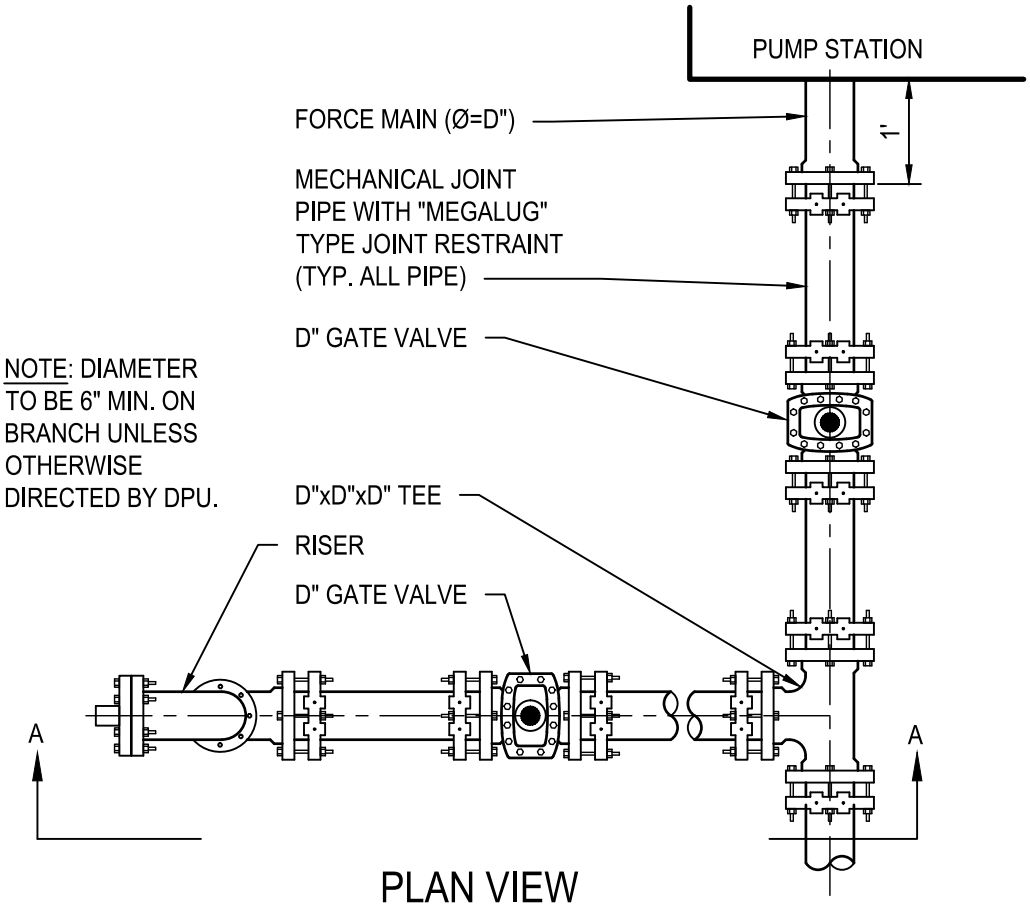

PLAN VIEW

EMERGENCY PUMP CONNECTION

NOT TO SCALE

REFERENCE	RELEASE 1	CATEGORY	SHEET NO.	DPU DETAIL NO.
PFM Vol. II	2017	PUMPING STATIONS	1 of 1	450

NOTE: 0 TO 50 psi FOR LIFT STATIONS. 0 TO 100 psi FOR STATIONS PUMPING INTO FORCE MAINS.

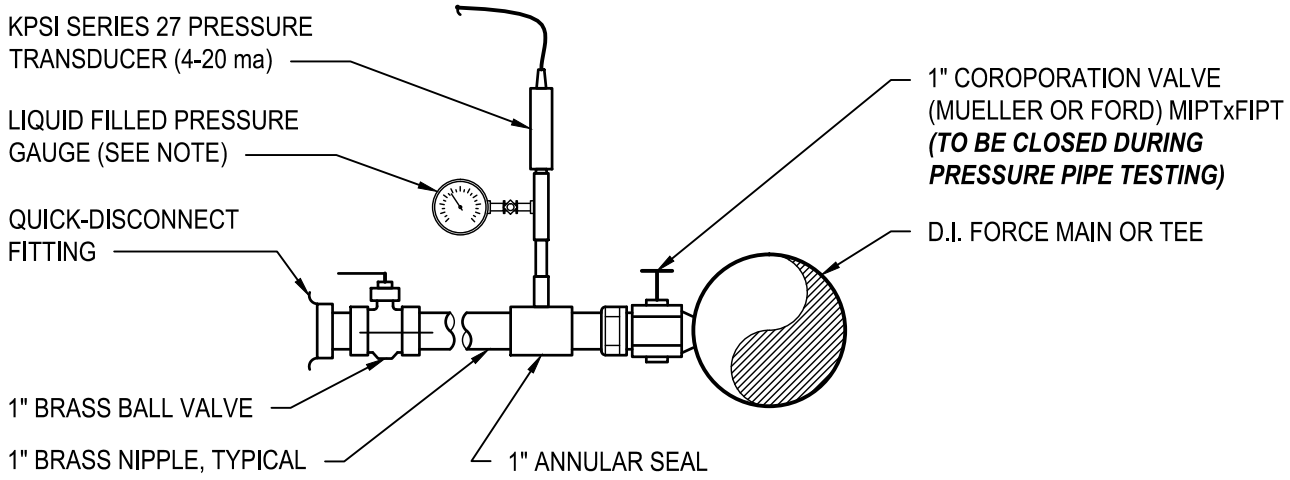

VERTICAL APPLICATION

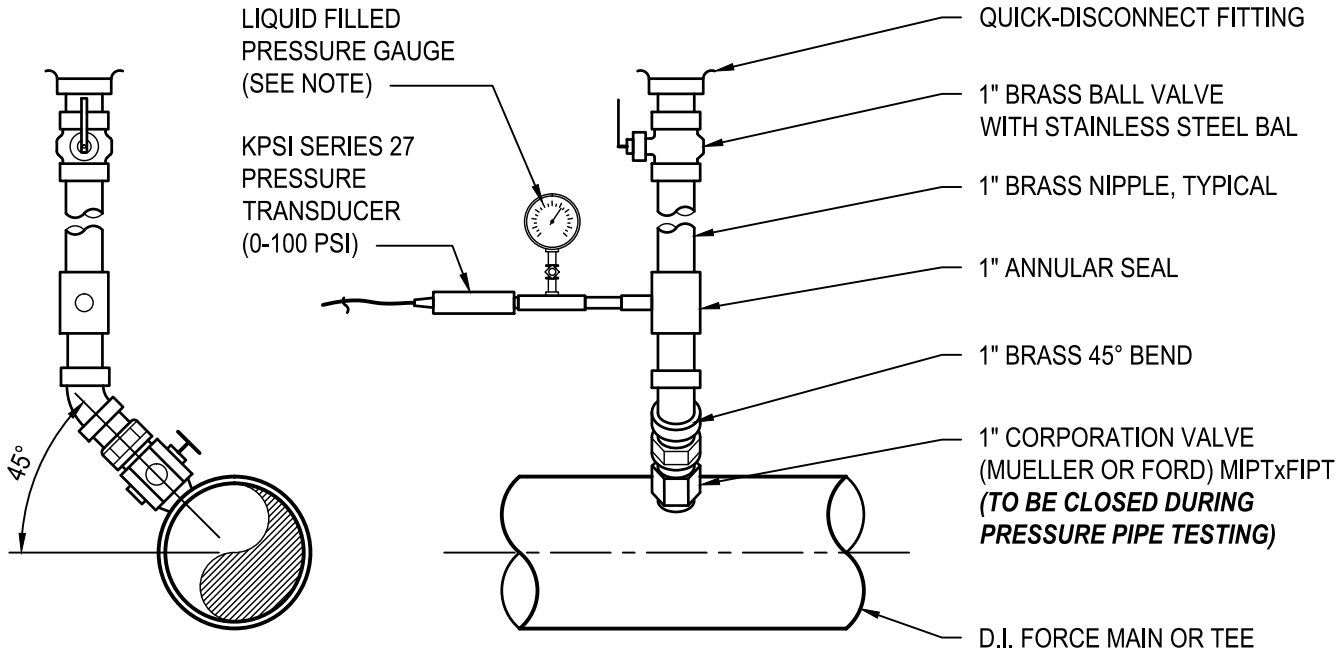

HORIZONTAL APPLICATION

PRESSURE SENSOR TAP FOR PUMP STATION FORCE MAIN

NOT TO SCALE

REFERENCE	RELEASE 1	CATEGORY	SHEET NO.	DPU DETAIL NO.
PFM Vol. II	2017	PUMPING STATIONS	1 of 1	451

NOTES:

1. COORDINATE LOCATION OF STILLING WELL WITH DPU PRIOR TO INSTALLATION.

2. CENTER ACCESS FOR TRANSDUCER REMOVAL OVER STILLING WELL

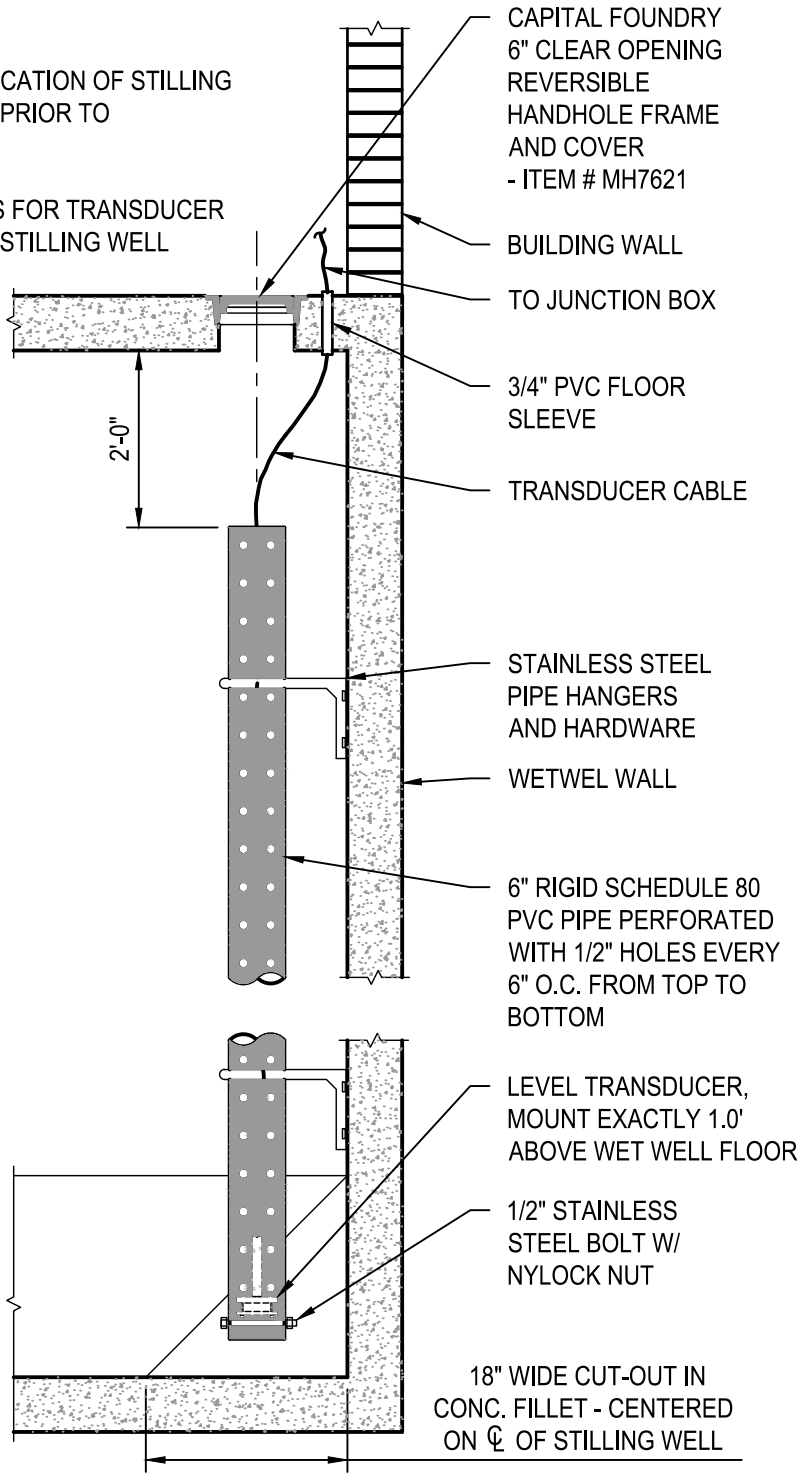

PUMP STATION STILLING WELL AND LEVEL TRANSDUCER

NOT TO SCALE

REFERENCE	RELEASE 1	CATEGORY	SHEET NO.	DPU DETAIL NO.
PFM Vol. II	2017	PUMPING STATIONS	1 of 1	452

NO SMOKING SIGN:
1. ALUMINUM - 10" BY 7".
2. GRAINGER CATALOG ITEM No. 1M146.

CONFINED SPACE SIGN:
1. ALUMINUM - 7" BY 10".
2. GRAINGER CATALOG ITEM No. 15H985.
3. ATTACH TO EACH WET WELL HATCH WITH STAINLESS STEEL BOLTS.

NON-PERMIT CONFINED SPACE SIGN:
1. ALUMINUM - 7" BY 10"
2. GRAINGER CATALOG ITEM No. 38K452.
3. MOUNT ON BUILDING WALL ADJACENT TO DOOR OPENING WITH MASONRY INSERTS AND STAINLESS STEEL SCREWS.

PUMP STATION IDENTIFICATION SIGN:
1. 0.063 ALUMINUM BAKED ENAMEL BKG. WITH VINYL LETTING AND GRAPHICS 1.4' WIDE BY 1.0' HIGH.
2. ALL LETTERING AND BORDER RED.
3. BORDER 0.015' THICK, 0.02' FROM EDGE.
4. PUMPING STATION AND No. XXX - 0.15' TALL.
5. IN CASE OF EMERGENCY - 0.12' TALL.
6. CALL (ITALIC) - 0.1' TALL.
7. 514-7000 - 0.14' TALL.
8. LETTERING TO BE CENTERED ON SIGN.

PUMP STATION SIGNS

NOT TO SCALE

REFERENCE	RELEASE 1	CATEGORY	SHEET NO.	DPU DETAIL NO.
PFM Vol. II	2017	PUMPING STATIONS	1 of 1	453

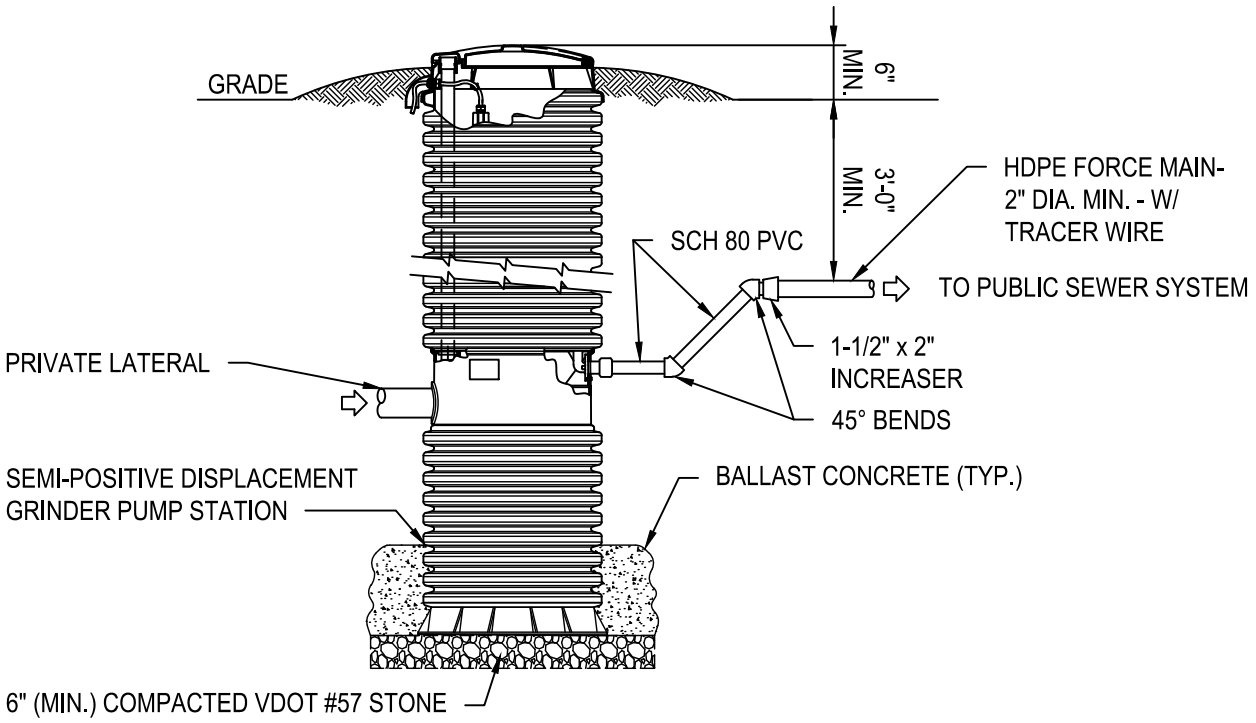

NOTES:

1. FOR SINGLE-FAMILY RESIDENTIAL USE ONLY.
2. GRINDER PUMPS SHALL BE LOCATED ON EACH LOT/PARCEL AS SHOWN ON THE APPROVED DEVELOPMENT PLANS AND A MINIMUM OF 10 FEET AWAY FROM FOUNDATIONS AND STRUCTURES.
3. GRINDER PUMP ASSEMBLIES SHALL BE SEMI-POSITIVE DISPLACEMENT TYPE AS MANUFACTURED BY ENVIRONMENT ONE CORPORATION OR APPROVED EQUAL. ALTERNATE PUMP SELECTION SUBJECT TO APPROVAL BY DPU.
4. ALL MATERIALS AND INSTALLATION PROCEDURES SHALL BE IN ACCORDANCE WITH MANUFACTURER'S SPECIFICATIONS AND APPROVED BY DPU.
5. THE GRINDER PUMP FORCE MAIN SHALL BE TESTED AT 1 1/2 TIMES THE WORKING PRESSURE OR 150 P.S.I. WHICHEVER IS GREATER.
6. PROVIDE FLOATATION CALCULATIONS TO DPU WITH DESIGN DRAWINGS.
7. PROVIDE BALLAST CONCRETE AS REQUIRED TO RESIST UPLIFT.

PRIVATE GRINDER PUMP STATION

NOT TO SCALE

REFERENCE	RELEASE 1	CATEGORY	SHEET NO.	DPU DETAIL NO.
PFM Vol. II	2017	PUMPING STATIONS	1 of 3	454-1

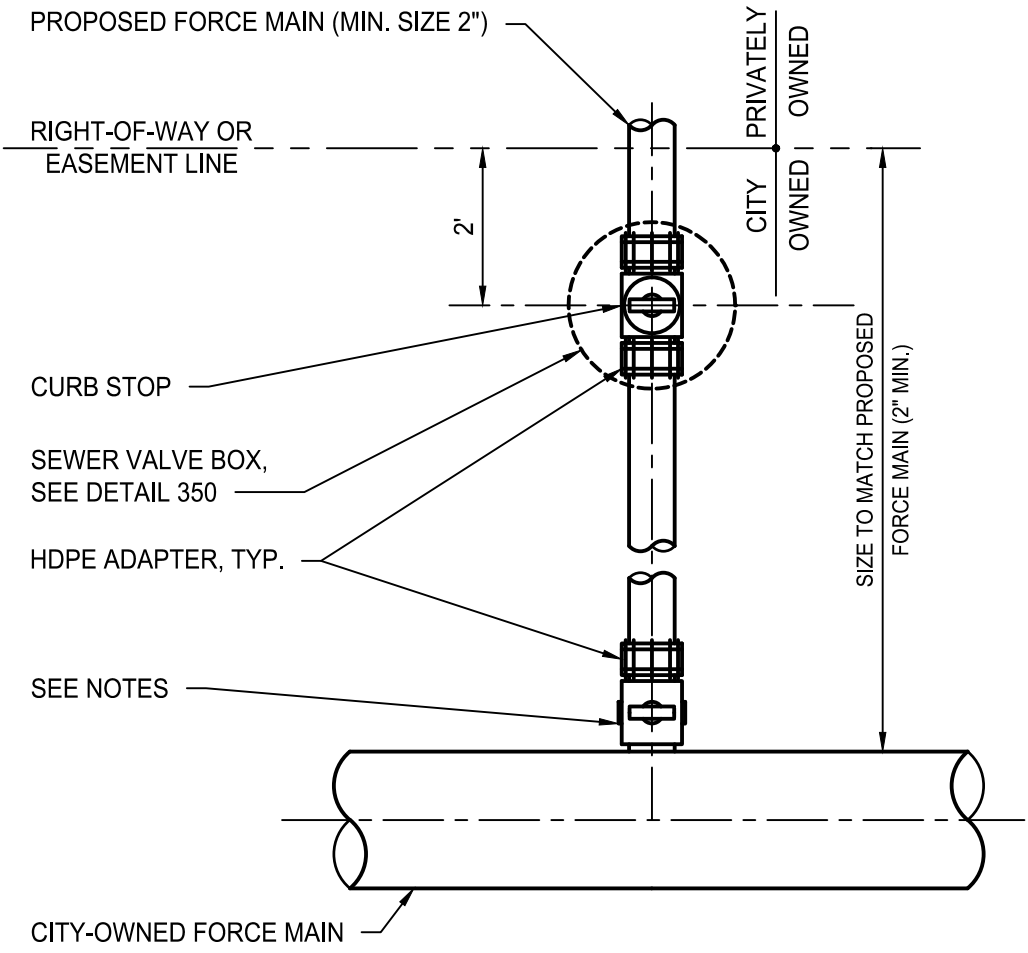

NOTES:

1. MINIMUM SIZE OF TAP ALLOWED IS 2".
2. USE 2" CORPORATION STOP (FORD, MUELLER OR APPROVED EQUAL) FOR 2" FORCE MAIN TAP TO 8" AND LARGER DIP.
3. USE STAINLESS STEEL TAPPING SLEEVE FOR A.C. PIPE.
4. USE EPOXY COATED D.I. TAPPING SADDLE FOR FORCE MAINS LESS THAN 8" DIAMETER AND FOR ALL PVC FORCE MAINS.
5. ALL FITTINGS SHALL BE RESTRAINED.
6. CITY SHALL APPROVE PROPOSED TAP LOCATIONS.
7. PIPE DIAMETERS DETERMINED BY DPU.

PRIVATE GRINDER PUMP STATION
FORCE MAIN CONNECTION TO CITY FORCE MAIN

NOT TO SCALE

REFERENCE	RELEASE 1	CATEGORY	SHEET NO.	DPU DETAIL NO.
PFM Vol. II	2017	PUMPING STATIONS	2 of 3	454-2

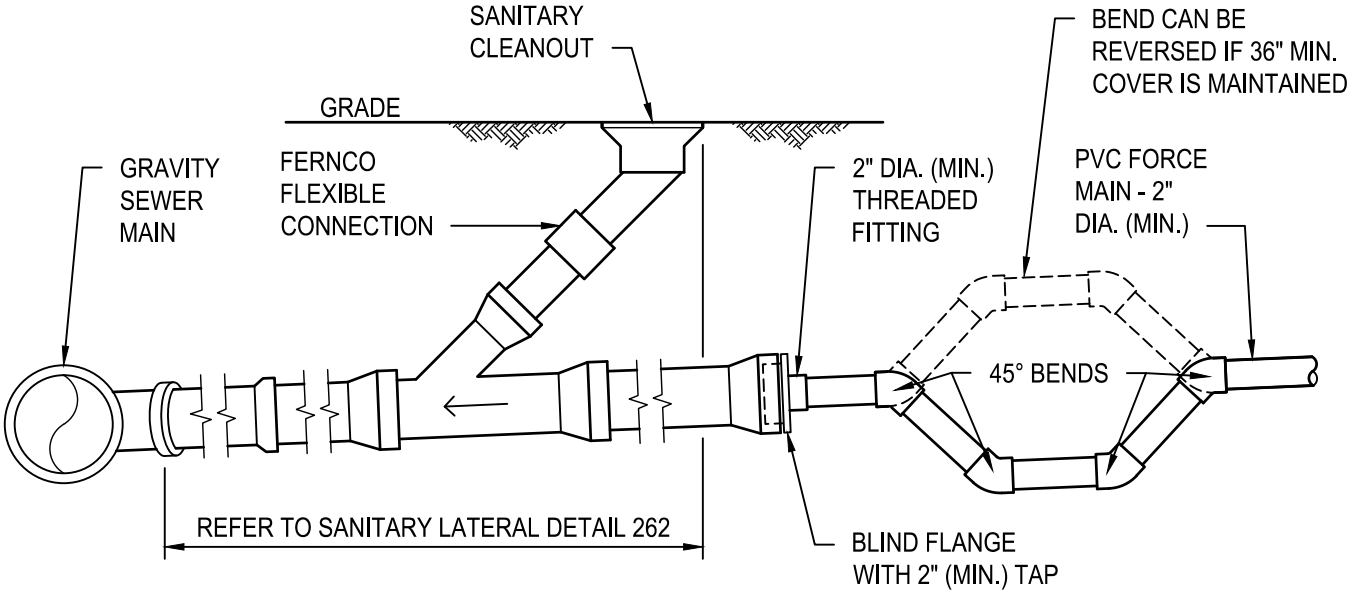

PRIVATE GRINDER PUMP STATION
FORCE MAIN CONNECTION TO GRAVITY SYSTEM

NOT TO SCALE

REFERENCE	RELEASE 1	CATEGORY	SHEET NO.	DPU DETAIL NO.
PFM Vol. II	2017	PUMPING STATIONS	3 of 3	454-3

GENERAL NOTES

1. THE CONTROL ROOM EXHAUST FAN SHALL HAVE A WALL-MOUNTED AND ACCESSIBLE THERMOSTAT FOR AUTOMATIC OPERATION.
   a. THE THERMOSTAT RANGE SHALL HAVE A MINIMUM SPAN OF 80-130 DEGREES F.
   b. THE THERMOSTAT SHALL BE INITIALLY SET AT 90 DEGREES.
2. MOUNT BOTTOM OF ENCLOSURE 4' ABOVE FINISHED FLOOR ON INSIDE WALL OF BUILDING.

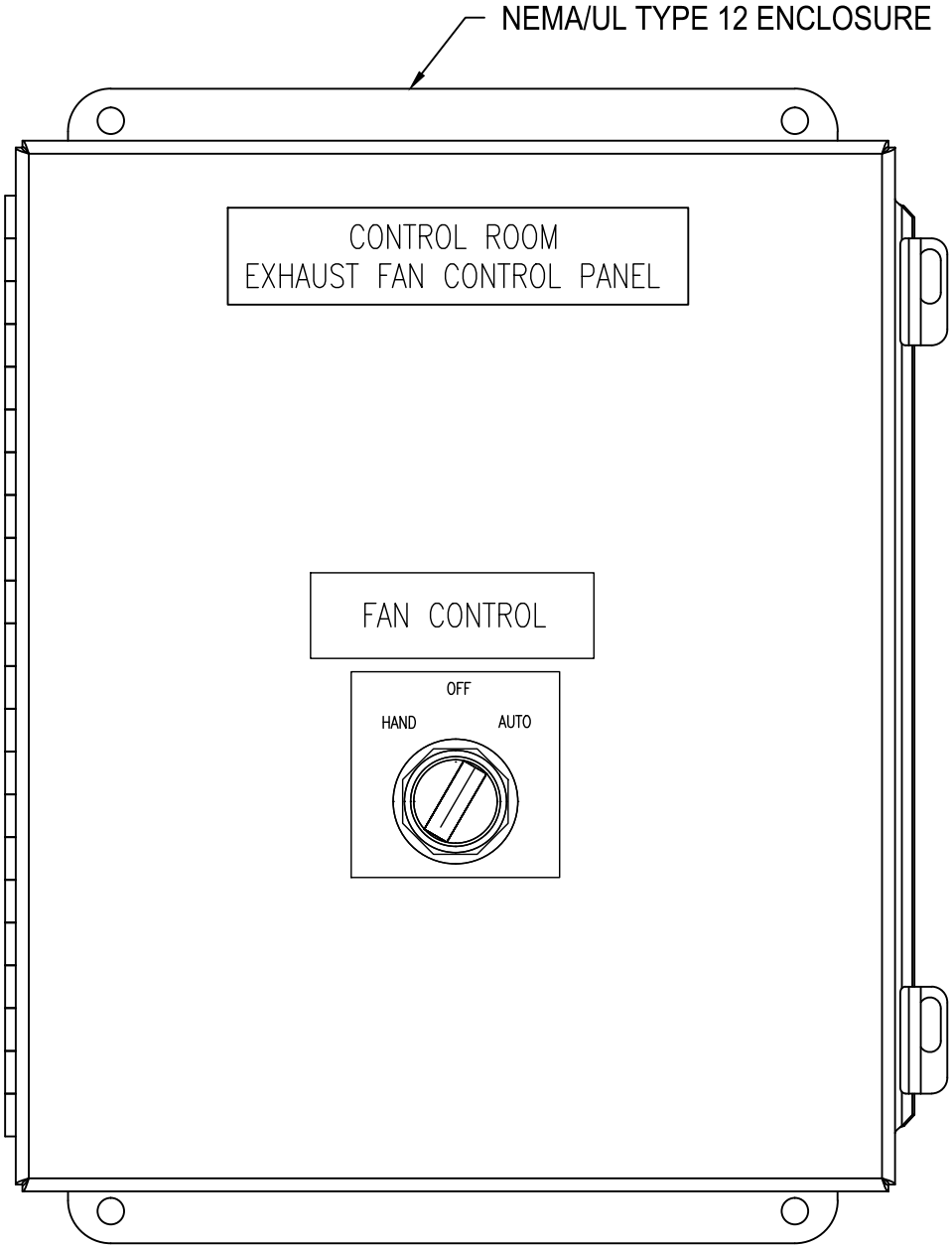

CONTROL ROOM EXHAUST FAN PANEL ELEVATION

NOT TO SCALE

REFERENCE	RELEASE 1	CATEGORY	SHEET NO.	DPU DETAIL NO.
PFM Vol. II	2017	PUMPING STATIONS	1 of 2	455-1

SPECIFIC NOTES

1. PROVIDE A NORMALLY CLOSED TIMED OPEN TIMING RELAY (TR) TO START EXHAUST FAN OPERATION FOR SET PERIOD OF TIME. COORDINATE TIME SETTING AT START-UP TO PROVIDE ONE COMPLETE CHANGE OF CONTROL ROOM AIR PER CYCLE. TR SHALL BE PART NUMBER 700-FSA4UU23 BY ALLEN BRADLEY.

2. TWO-POSITION SWITCH AND PILOT LIGHT LOCATED IN PUMP STATION ENTRANCE PANEL. SEE DETAIL 457 FOR PUMP STATION ENTRANCE PANEL.

3. CONNECTION TO TELOG INPUT. TELOG TO PROVIDE MAINTENANCE ALARM IF SECURITY DONGLE IS REMOVED AND ENTRANCE CONTROL SWITCH LEFT IN THE OCCUPIED MODE FOR MORE THAN 60 SECONDS.

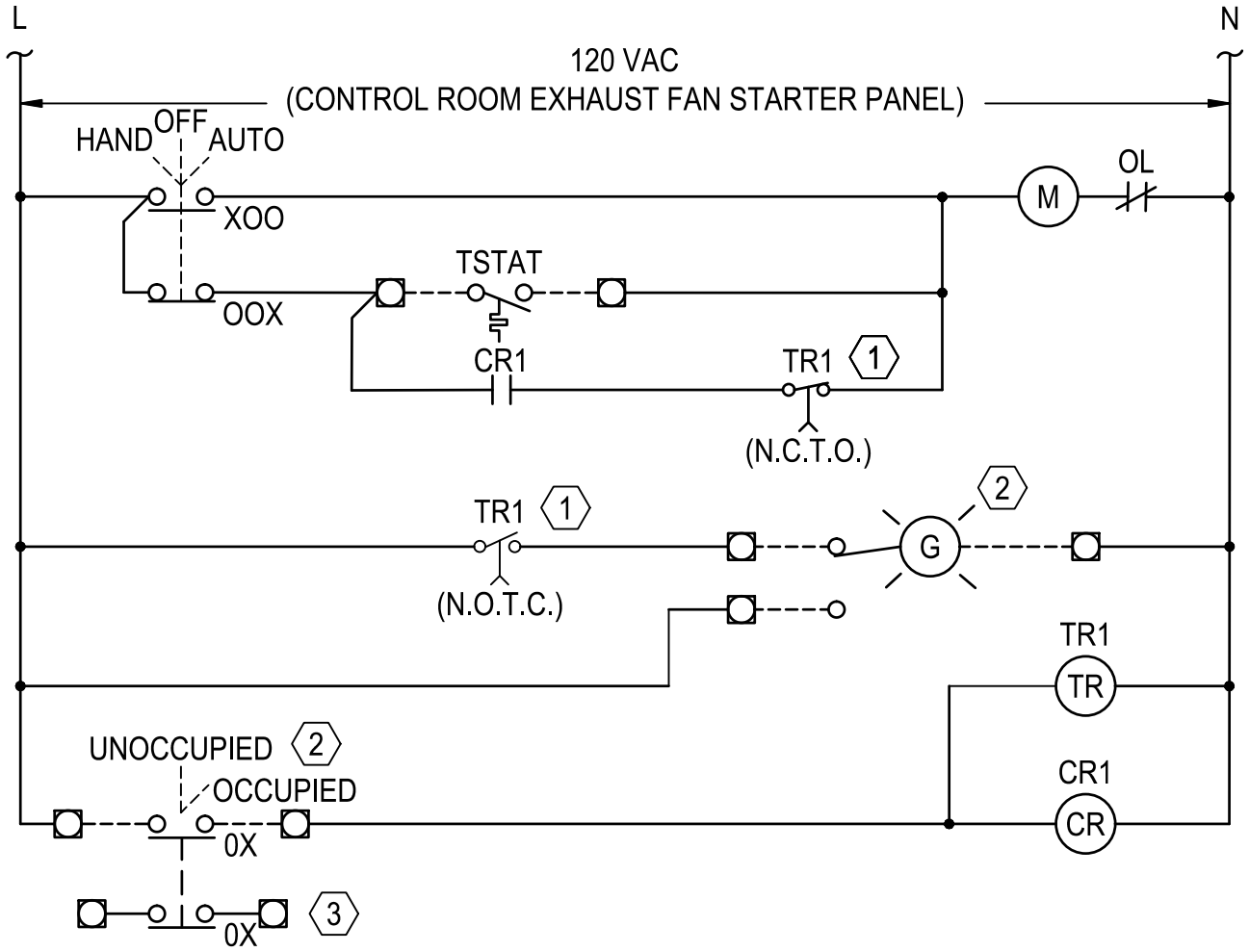

CONTROL ROOM EXHAUST FAN CONTROL PANEL SCHEMATIC

NOT TO SCALE

REFERENCE	RELEASE 1	CATEGORY	SHEET NO.	DPU DETAIL NO.
PFM Vol. II	2017	PUMPING STATIONS	2 of 2	455-2

NOTES:

1. DIAGRAM IS BASED ON THE CITY'S PREFERENCE FOR 480/277V, 3Ø, 4W ELECTRICAL SERVICE.
2. ELECTRICAL ENGINEER OF RECORD IS RESPONSIBLE FOR DESIGNING AN ELECTRICAL SYSTEM SUITABLE FOR THE SPECIFIC PUMP STATION.

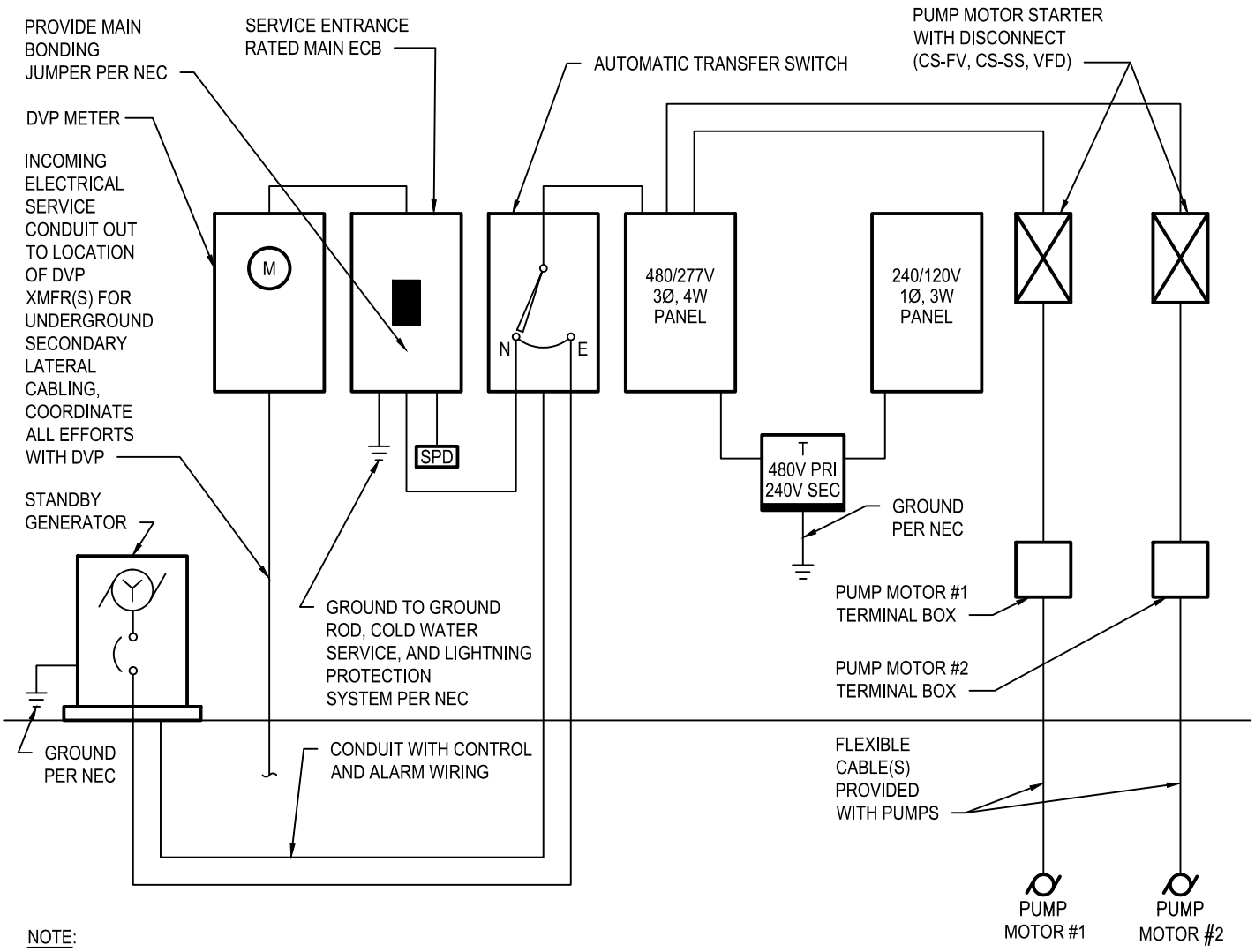

NOTE:
DIAGRAM IS BASED ON THE CITY'S PREFERENCE FOR 480/277V, 3Ø, 4W ELECTRICAL SERVICE.

GENERIC ELECTRICAL RISER DIAGRAM

NOT TO SCALE

REFERENCE	RELEASE 1	CATEGORY	SHEET NO.	DPU DETAIL NO.
PFM Vol. II	2017	PUMPING STATIONS	1 of 1	456

GENERAL NOTES

1. THE PUMP STATION ENTRANCE PANEL SHALL BE NEMA 4X RATED, STAINLEESS STEEL, WALL-MOUNTED AND LOCKABLE WITH USE OF A PADLOCK.
2. MOUNT BOTTOM OF PANEL 4' ABOVE FINISHED FLOOR ON OUTSIDE OF BUILDING NEAR (BUT NOT IN CONFLICT WITH) ENTRANCE DOOR. FINAL LOCATION TO BE COORDINATED WITH THE DEPARTMENT.
3. ENCLOSURE SHALL BE A RITTAL PANEL (PN: JB100806H4) WITH A PADLOCKABLE 1/4 TURN THUMB HANDLE ACCESSORY (PN: 8018577).
4. ALL CONDUIT PENETRATIONS SHALL BE THROUGH BOTTOM OF ENCLOSURE ONLY.

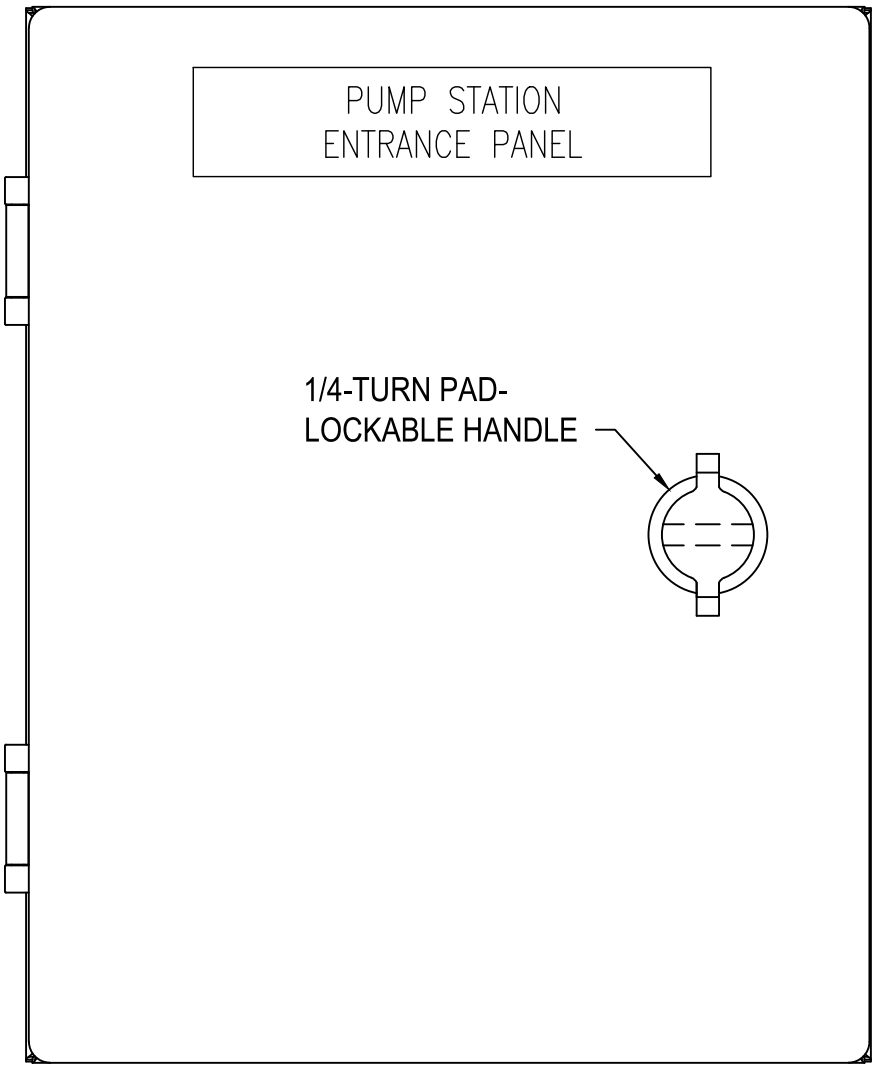

PUMP STATION ENTRANCE PANEL ENCLOSURE ELEVATION

NOT TO SCALE

REFERENCE	RELEASE 1	CATEGORY	SHEET NO.	DPU DETAIL NO.
PFM Vol. II	2017	PUMPING STATIONS	1 of 2	457-1

GENERAL NOTES

1. THE PUMP STATION ENTRANCE PANEL SHALL HAVE THE TELOG DOOR ENTRY MONITORING SYSTEM MODULE MOUNTED INSIDE ALONG WITH A DIN-RAIL MOUNTED TWO POSITION SWITCH AND GREEN PUSH-TO-TEST LED PILOT LIGHT
2. SWITCH CONTROL FUNCTIONS SHALL BE AS SHOWN ON DRAWING 455-2.

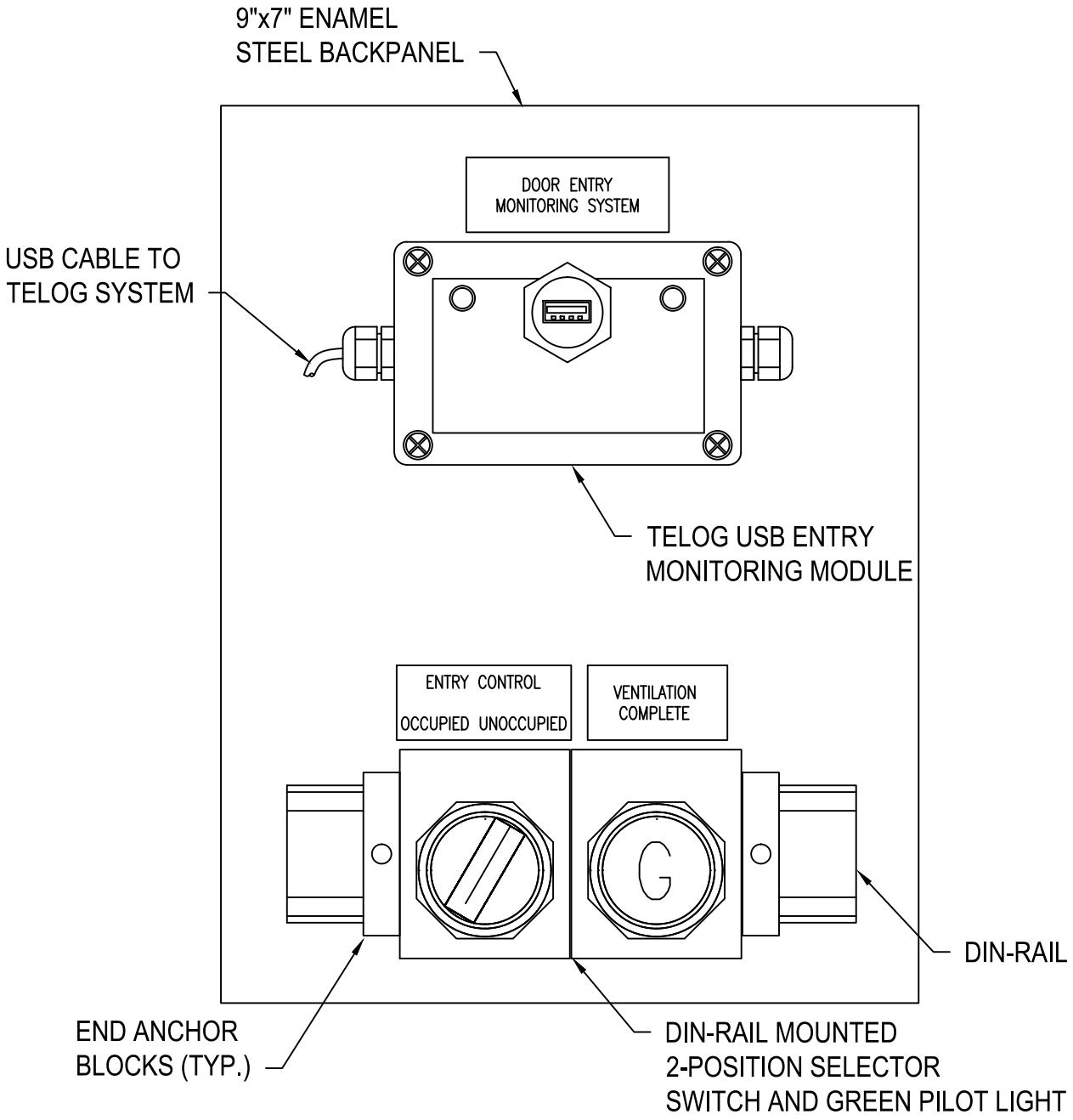

PUMP STATION ENTRANCE PANEL
BACK PANEL ELEVATION

NOT TO SCALE

REFERENCE	RELEASE 1	CATEGORY	SHEET NO.	DPU DETAIL NO.
PFM Vol. II	2017	PUMPING STATIONS	2 of 2	457-2

NOTES

1. CHECK VALVE SWING ARM COUNTERWEIGHT
2. PROXIMITY SWITCH
3. ALUMINUM MOUNTING BRACKET. MINIMUM 0.125" THICK. FABRICATE AND INSTALL SO THAT PROXIMITY SWITCH IS SENSING BOTTOM FACE OF COUNTERWEIGHT.

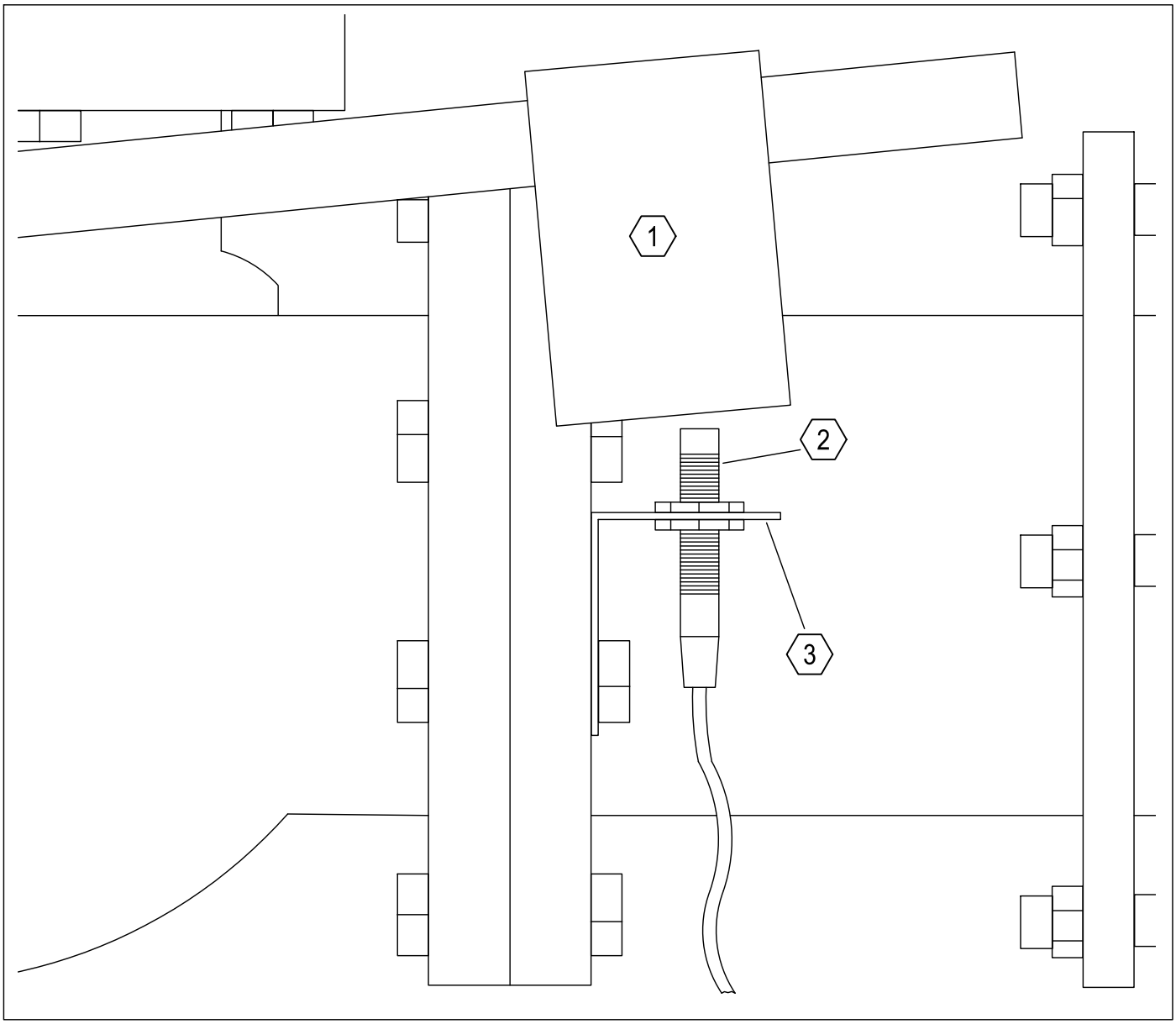

CHECK VALVE PROXIMITY SWITCH MOUNTING DETAIL

NOT TO SCALE

REFERENCE	RELEASE 1	CATEGORY	SHEET NO.	DPU DETAIL NO.
PFM Vol. II	2017	PUMPING STATIONS	1 of 1	458

City of Suffolk
Public Facilities Manual Volume II

STANDARD DETAILS

This page intentionally left blank.

APPENDIX G

PUMP STATIONS

This page intentionally left blank.

APPENDIX G

PUMP STATIONS

TYPE 1

This page intentionally left blank.

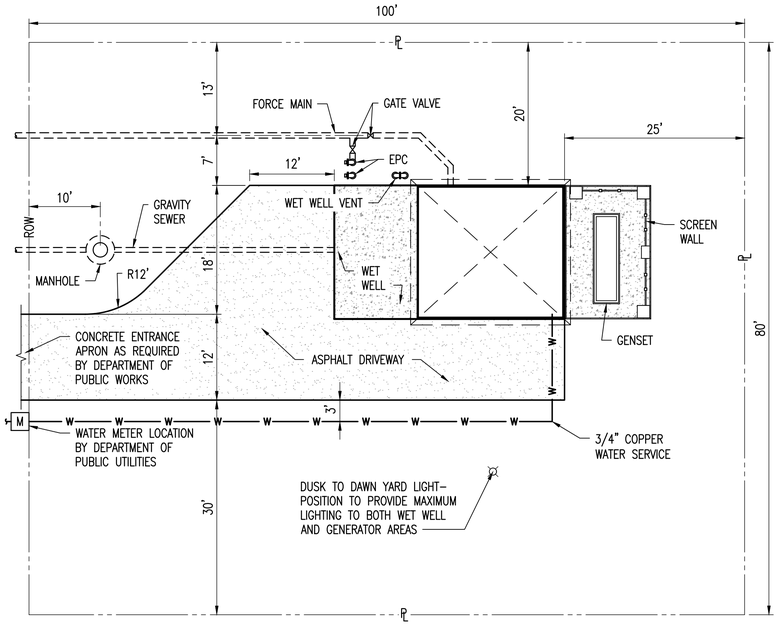

TYPICAL SITE PLAN

SCALE: 1" = 10'

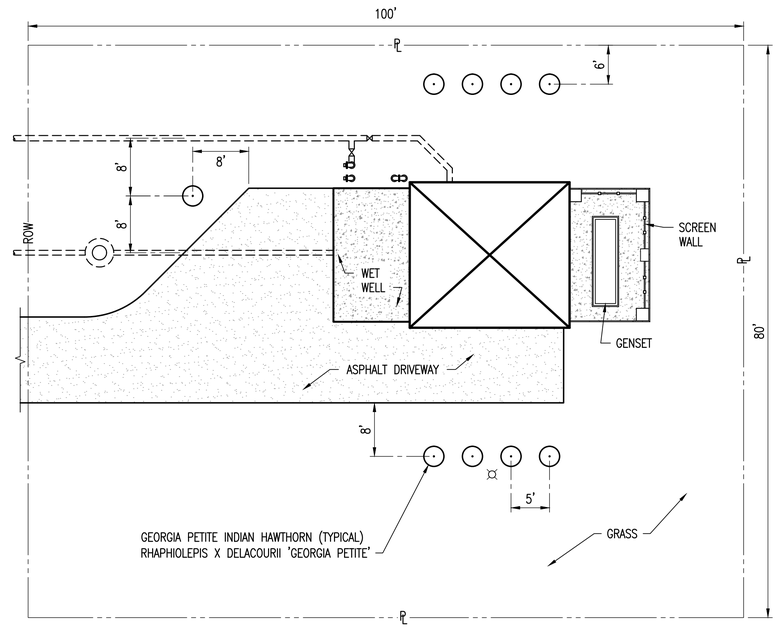

TYPICAL LANDSCAPING PLAN

SCALE: 1" = 10'

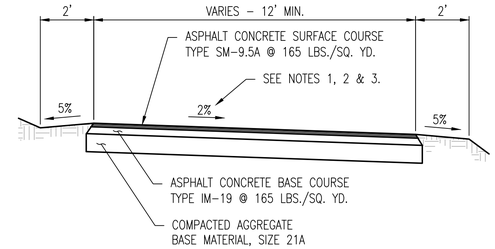

ASPHALT PAVEMENT SECTION

NOT TO SCALE

NOTES:

1. SLOPE DRIVEWAY TO MATCH DIRECTION OF EXISTING DRAINAGE PATTERNS.
2. DO NOT BLOCK EXISTING DRAINAGE.
3. CROSS SLOPE IS SHOWN FOR ILLUSTRATION PURPOSES: IF CROWN IS INDICATED BY EXISTING TOPOGRAPHY, THEN USE 2% CROWN SLOPE.
4. PAVEMENT AND AGGREGATE BASE THICKNESSES SHALL BE DESIGNED BY A GEOTECHNICAL ENGINEER.

ABBREVIATIONS

AFF	ABOVE FINISHED FLOOR
ATS	AUTOMATIC TRANSFER SWITCH
CB	SERVICE DISCONNECT
CLR	CLEAR
DN	DOWN
LP	LIGHTING PANEL
M/CT	METER AND CT CABINET
PCP	PUMP CONTROL PANEL
SPD	SURGE PROTECTION DEVICE
VFD	VARIABLE FREQUENCY DRIVE
XFMR	TRANSFORMER

GENERAL NOTES

1. THESE GUIDANCE DOCUMENTS INDICATE MINIMUM BUILDING AND CLEARANCE DIMENSIONS, OVERALL EQUIPMENT AND PIPING LAYOUTS, AND PUMP STATION WET WELL/CONTROL DEPTHS REQUIRED TO ALLOW OPTIMUM PERFORMANCE WHEN USED WITH THE DEPARTMENT'S STANDARD CONTROLS SPECIFICATIONS AND DRAWINGS.
2. THE ENGINEER OF RECORD IS RESPONSIBLE TO INCLUDE ANY AND ALL OTHER DESIGN ITEMS (SUPPORTS, DETAILS, STRENGTHS, ANCILLARY ITEMS, ETC.) AS MAY BE NECESSARY TO PROVIDE A COMPLETE DESIGN.
3. PUMP STATION SHALL BE DESIGNED USING THE CODES LISTED ON SHEET 3 OF 4, GENERAL ARCHITECTURAL NOTE 1.

SITE PLAN NOTES

1. LOCATION OF PUMP STATION AND OTHER FEATURES SHOWN ON THESE PLANS IS SCHEMATIC AND SUBJECT TO CHANGE ACCORDING TO SPECIFIC SITE CONSTRAINTS. COORDINATE SITE LAYOUT WITH THE DEPARTMENT.
2. ALL PIPING ON PUMP STATION SITE SHALL BE DUCTILE IRON.
3. MAINTAIN A MINIMUM OF 6" ELEVATION DIFFERENCE BETWEEN NEW DRIVEWAY SURFACE AND FINISH FLOOR OF PUMP STATION TO PREVENT WATER INTRUSION ONTO THE PUMP STATION FLOOR.
4. ORIENTATION OF GENERATOR AND SCREEN WALL SHALL BE APPROVED BY DEPARTMENT FOR EACH SITE.

STATION CONTROL SYSTEM NOTES

1. PUMP STATION DESIGN SHALL USE THE CITY OF SUFFOLK DEPARTMENT OF PUBLIC UTILITIES' (DEPARTMENT) STANDARD CONTROL SYSTEM SPECIFICATIONS AND DRAWINGS.
2. CONTROL SYSTEM STANDARD SPECIFICATIONS AND DRAWINGS SHALL BE AUGMENTED WITH ADDITIONAL PROJECT–SPECIFIC INSTRUMENTATION AND CONTROL SPECIFICATION AND DRAWINGS AS MAY BE NECESSARY TO PROVIDE A COMPLETE DESIGN.
3. PUMP STATION FLOW CONTROLS USE A PRESSURE TRANSDUCER AND A TWO–FLOAT BACKUP SYSTEM WITH A THIRD FLOAT TO INDICATE A HIGH WATER ALARM CONDITION.
4. WETWELL DEPTH IS A FUNCTION OF THE INCOMING SEWER INVERT ELEVATION AND PUMP CONTROL ELEVATIONS AND SHALL BE CALCULATED AS FOLLOWS:
   - A. LAG PUMP ON LEVEL IS SET 12–INCHES BELOW INVERT OF INFLUENT GRAVITY SEWER.
   - B. LEAD PUMP ON LEVEL IS SET 6–INCHES BELOW LAG PUMP ON LEVEL.
   - C. PUMP OFF LEVEL IS SET TO ALLOW AN OPERATING RANGE CALCULATED BY MULTIPLYING THE AVERAGE FLOW RATE TIMES A 20–MINUTE DETENTION TIME.
   - D. FLOAT MODE STOP (LOWER FLOAT) LEVEL SHALL BE SET 6–INCHES BELOW PUMP OFF LEVEL.
   - E. MINIMUM WATER LEVEL SHALL BE SET AT 6–INCHES BELOW FLOAT MODE STOP LEVEL.
   - F. MINIMUM PUMP INTAKE SUBMERGENCE SHALL BE CALCULATED FROM THE MINIMUM WATER LEVEL PLUS THE GREATER OF ONE OF THE THREE FOLLOWING DIMENSIONS:
     - i. PUMP MANUFACTURER'S RECOMMENDATION FOR THIS SPECIFIC PROJECT.
     - ii. TOP OF THE VOLUTE TO THE SUCTION BELL INTAKE.
     - iii. AS CALCULATED USING HYDRAULIC INSTITUTE STANDARDS FOR MINIMUM SUBMERGENCE.
   - G. TYPE 1 STATION SUCTION BELL INTAKE TO WET WELL FLOOR SHALL BE CALCULATED USING HYDRAULIC INSTITUTE STANDARDS.
5. PUMP STATION CONTROLS UTILIZE A BACKUP TWO FLOAT SYSTEM CONSISTING OF PUMPS OFF AND PUMPS ON. FLOAT LEVELS SHALL BE SET AS FOLLOWS:
   - A. FLOAT MODE STOP (LOWER FLOAT) LEVEL SHALL BE SET 6–INCHES BELOW THE PUMP OFF LEVEL.
   - B. FLOAT MODE START (INTERMEDIATE FLOAT) LEVEL SHALL BE SET 6–INCHES BELOW THE INCOMING SEWER INVERT ELEVATION.
6. HIGH LEVEL FLOAT ALARM (HIGHEST FLOAT) SHALL BE SET AT THE INVERT OF THE INCOMING SEWER PIPE.
7. WET WELL FLOOR LEVEL SHALL BE CONSIDERED AS 0.00 DEPTH.
8. WET WELL LEVEL TRANSDUCER BOTTOM SHALL BE SET AT 1.00 FOOT ABOVE THE WET WELL FLOOR. CONTROL PANEL LEVEL INDICATOR SHALL BE CALIBRATED SO THAT THE BOTTOM OF THE LEVEL TRANSDUCER INDICATES A LEVEL OF 1.00 FOOT.
9. SHOW ALL PUMP STATION CONTROL SET LEVELS AS ELEVATIONS ON A DIAGRAM ON THE PLANS. INCLUDE FORCE MAIN PRESSURE TRANSDUCER TAP ELEVATION AND PUMP STATION SERVICE AREA HIGH WATER OVERFLOW ELEVATION.

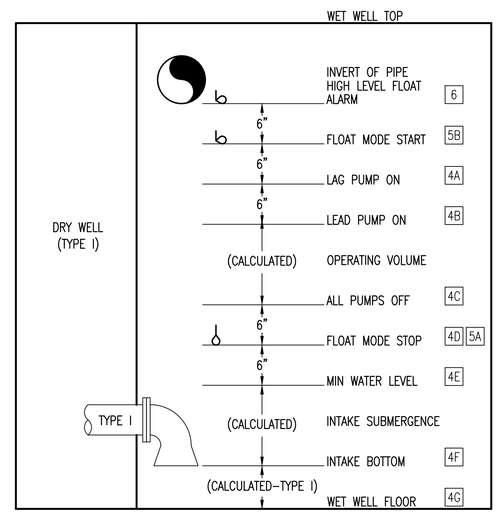

(#X REFER TO CONTROL SYSTEM NOTES THIS SHEET)

PUMP STATION CONTROL SET LEVELS

NOT TO SCALE

NANSEMOND 1646 SUFFOLK 1742 19 74 CITY of SUFFOLK, VIRGINIA

CITY OF SUFFOLK, VIRGINIA

DEPARTMENT OF PUBLIC UTILITIES
442 W. WASHINGTON STREET
SUFFOLK, VA 23434

PUBLIC FACILITIES MANUAL VOLUME II

WASTEWATER PUMP STATION PROTOTYPE DRAWINGS

TYPE 1

WET WELL / DRY WELL PUMP STATION

PEAK FLOW ≧ 500 GPM
OR MOTOR SIZE ≧ 30 HP

SITE PLAN, LANDSCAPE PLAN, AND NOTES

0 5' 10' 20'
SCALE: 1" = 10'

D.P.U. DETAIL No.
PS-1
SHEET 1 of 4

Scale: 1" = 10' | 2017 RELEASE 1

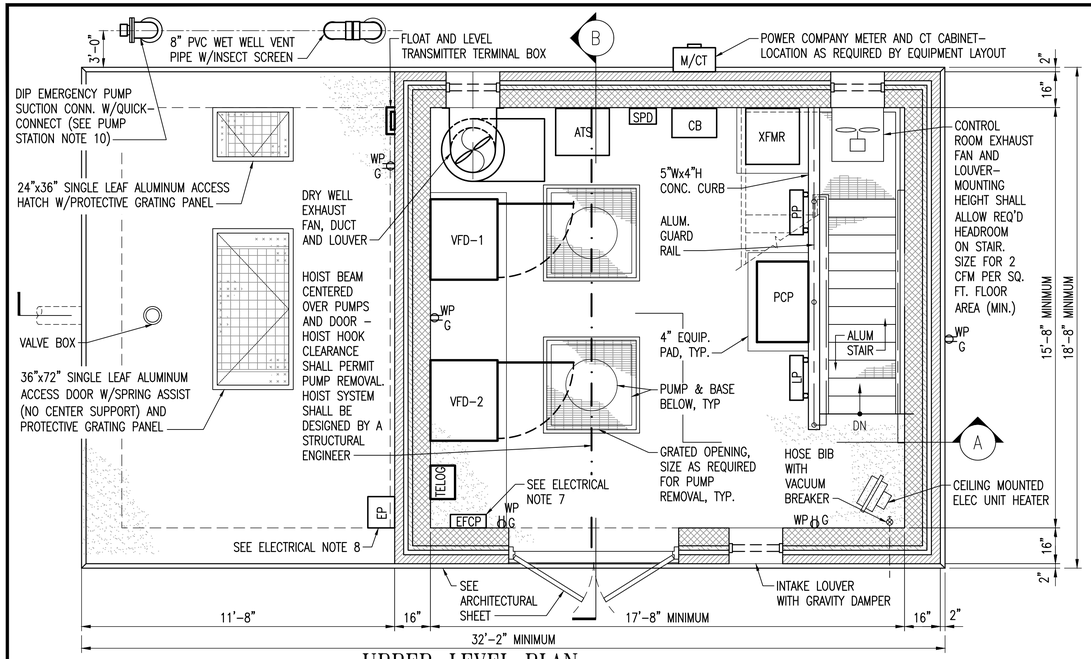

UPPER-LEVEL PLAN

SCALE: 3/8" = 1'-0"

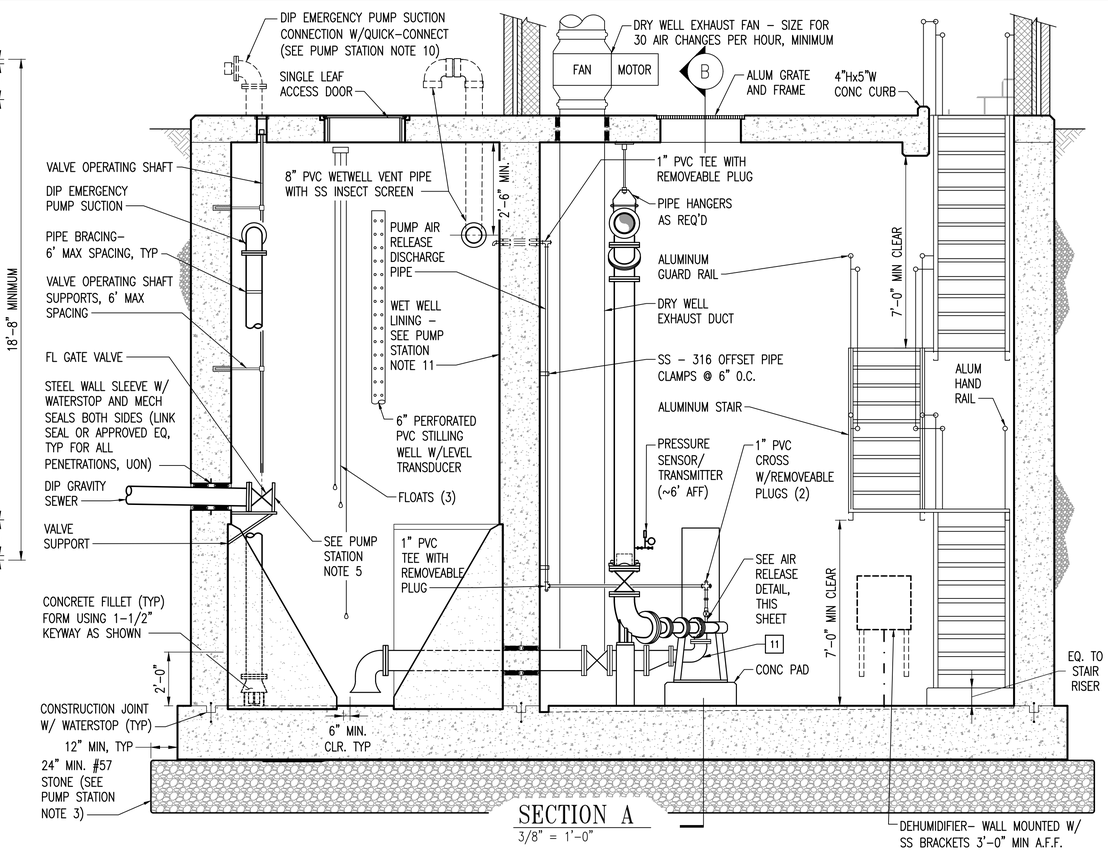

SECTION A

3/8" = 1'-0"

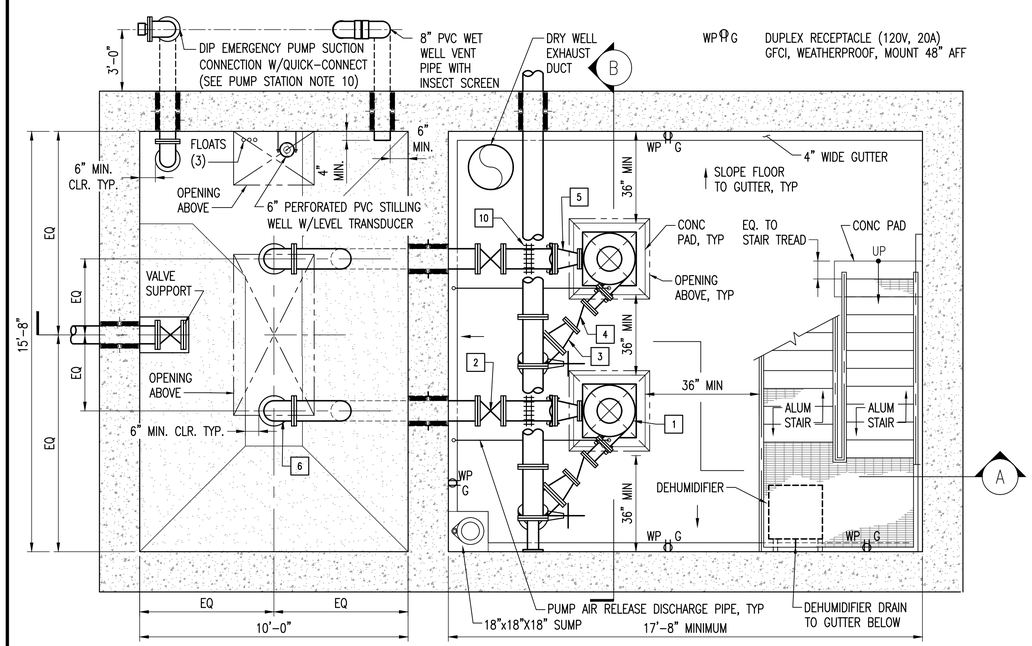

LOWER-LEVEL PLAN

SCALE: 3/8" = 1'-0"

PUMP STATION NOTES

1. DIMENSIONS SHOWN ARE MINIMUMS.
2. ENGINEER OF RECORD (EOR)SHALL PERFORM A COMPLETE DESIGN OF PUMP STATION TO SUIT ACTUAL CONDITIONS, CODES AND THE PFM V–II.
3. ENCAPSULATE #57 STONE WITH NON–WOVEN NEEDLE–PUNCHED SEPARATION GEOTEXTILE, MIRAFI 140N OR APPROVED EQUAL. LAP 2'. PUMP STATION FOUNDATION DESIGN BY A VA. LICENSED GEOTECHNICAL ENGINEER WILL BE CONSIDERED IN LIEU OF FOUNDATION SHOWN.
4. FILL EXCAVATION IN 6–INCH LIFTS WITH VDOT TYPE 1 SELECT FILL OR VDOT 21A STONE. COMPACT TO NOT LESS THAN 95% OF MAXIMUM DRY DENSITY AS DETERMINED BY ASTM D698 STANDARD PROCTOR TEST METHOD.
5. GATE VALVES LARGER THAN 8–INCHES SHALL BE SUPPORTED.
6. ALL PIPE JOINTS SHALL BE RESTRAINED/FLANGED.
7. RESTRAINED FLEXIBLE SLEEVE COUPLINGS MAY BE USED TO FACILITATE PIPE AND FITTING ASSEMBLY.
8. ALL METAL HARDWARE IN WET WELL SHALL BE TYPE 316L STAINLESS STEEL.
9. ALL BRACING AND OTHER ATTACHMENTS INSIDE THE WET WELL SHALL BE HILTI HAS WITH HILTI HIT–RE 500 EPOXY ADHESIVE OR APPROVED EQUAL.
10. EMERGENCY PUMP SUCTION PIPE SHALL BE SIZED BY THE EOR BASED ON PUMP STATION CAPACITY AND PORTABLE PUMP EQUIPMENT AVAILABLE FROM THE DEPARTMENT OF PUBLIC UTILITIES (DPU).
11. CONTACT DPU FOR APPROVED WET WELL LINER.
12. WET WELL HATCHES SHALL BE PROVIDED WITH THE HATCH MANUFACTURER'S PAINTED ALUMINUM FALL PROTECTION GRATING SYSTEM.

ELECTRICAL NOTES

1. ELECTRICAL/CONTROL EQUIPMENT SIZES SHOWN WILL VARY WITH ACTUAL PUMP STATION REQUIREMENTS. ENGINEER SHALL SHOW ACTUAL EQUIPMENT SELECTED DRAWN TO SCALE ON ELECTRICAL DRAWINGS.
2. ALL ELECTRICAL/CONTROL EQUIPMENT NOT WALL OR CEILING MOUNTED SHALL BE INSTALLED ON A 4" HIGH HOUSEKEEPING PAD.
3. REFER TO STANDARD TYPICAL PUMP STATION NOTES AND CIVIL SITE PLAN SHEET FOR CONTROL SYSTEM NOTES AND SET LEVEL SCHEMATIC.
4. DRY–WELL FAN SHALL BE EXHAUST AND BE INTERLOCKED WITH THE DRY–WELL LIGHT SWITCH FOR SIMULTANEOUS OPERATION. FAN SHOULD BE SIZED PER THE SCAT REGULATIONS – INTERMITTENT AT 30 COMPLETE AIR CHANGES PER HOUR, MINIMUM.
5. A "DRY–WELL FLOODED" FLOAT SWITCH SHALL BE PROVIDED AND SET TO ALARM AND SHUT OFF THE EXHAUST FAN AT ONE–FOOT ABOVE THE DRY–WELL FLOOR (TO PROTECT THE FAN). FLOAT SWITCH SHALL BE SHOWN ON THE ELECTRICAL DRAWINGS.
6. THE CONTROL ROOM UNIT HEATER SHALL HAVE A WALL MOUNTED (AND ACCESSIBLE) THERMOSTAT. THE UNIT HEATER THERMOSTAT RANGE SHALL HAVE A MINIMUM SPAN OF 50–90 DEGREES F. THE UNIT HEATER THERMOSTAT SHALL BE INITIALLY SET AT 50 DEGREES F.
7. CONTROL ROOM EXHAUST FAN PANEL, SEE PFM V–II DETAIL 455.
8. PUMP STATION ENTRANCE PANEL, SEE PFM V–II DETAIL 457.

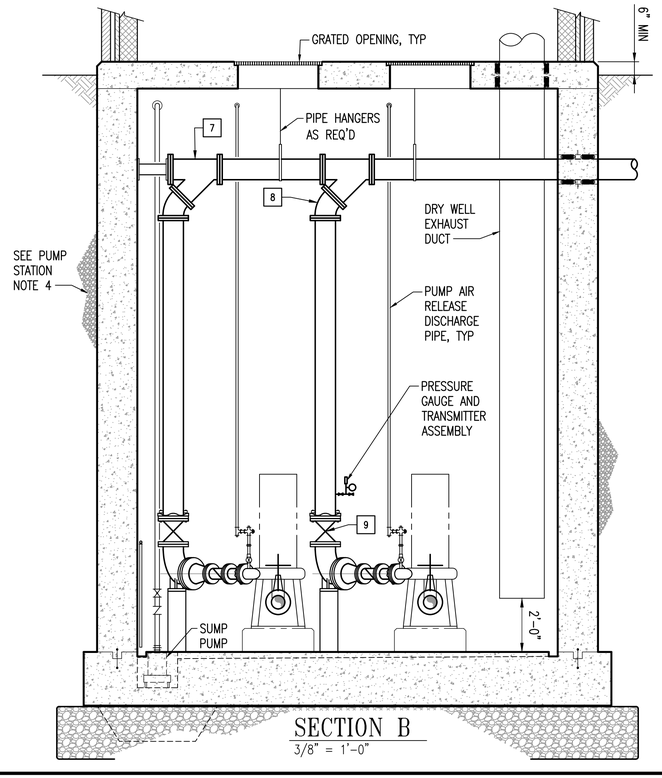

SECTION B

3/8" = 1'-0"

KEY NOTES

ALL ITEMS TYPICAL FOR ALL PUMPS

1	PUMP	6	FLG x FLARE ELBOW
2	GATE VALVE	7	45° WYE
3	CONCENTRIC REDUCER	8	45° BEND
4	CHECK VALVE	9	GATE VALVE
5	ECCENTRIC REDUCER	10	RESTRAINED FLEXIBLE SLEEVE
		11	LONG RADIUS 90° BEND

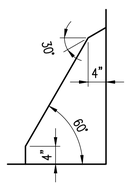

FILLET DETAIL

NTS

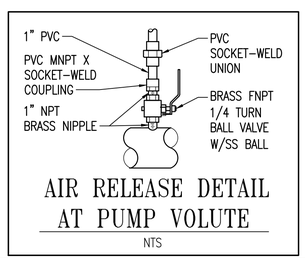

AIR RELEASE DETAIL AT PUMP VOLUTE

NTS

NANSEMOND 1646 SUFFOLK 1742 19 74 CITY of SUFFOLK, VIRGINIA

CITY OF SUFFOLK, VIRGINIA

DEPARTMENT OF PUBLIC UTILITIES
442 W. WASHINGTON STREET
SUFFOLK, VA 23434

PUBLIC FACILITIES MANUAL VOLUME II

WASTEWATER PUMP STATION PROTOTYPE DRAWINGS

TYPE 1

WET WELL / DRY WELL PUMP STATION

PEAK FLOW ≧ 500 GPM
OR MOTOR SIZE ≧ 30 HP

PLANS, SECTIONS AND NOTES

0 1' 2' 3' 5'
SCALE: 3/8" = 1'-0"

D.P.U. DETAIL No.
PS-1
SHEET 2 of 4

Scale: 3/8" = 1'-0" | 2017 RELEASE 1

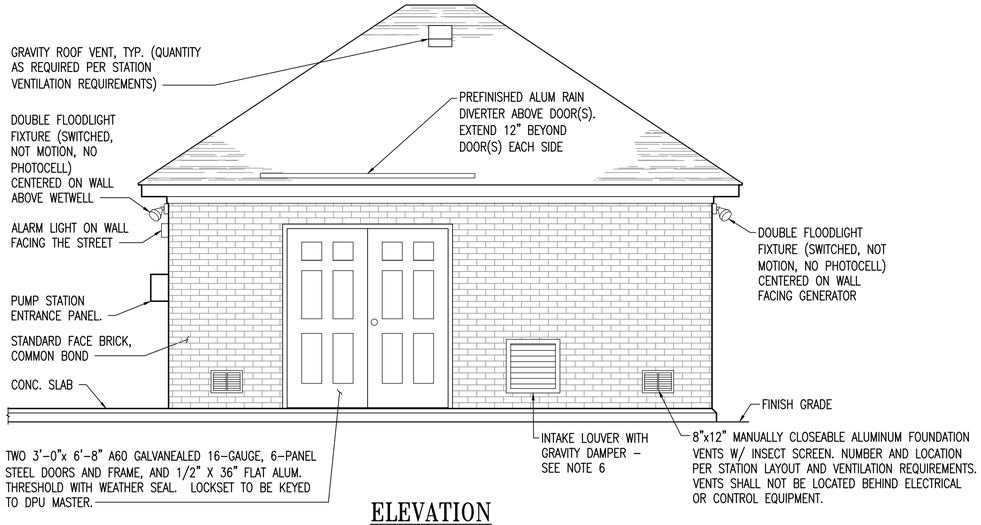

ELEVATION

SCALE: 3/8" = 1'-0"

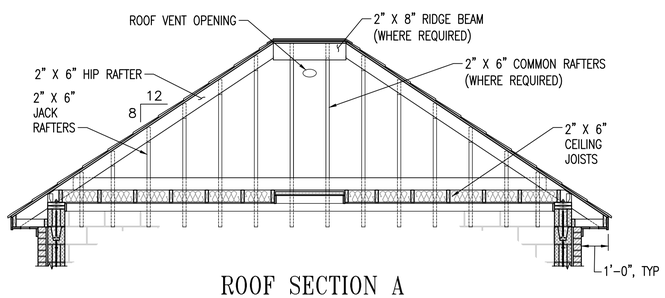

ROOF SECTION A

3/8" = 1'-0"

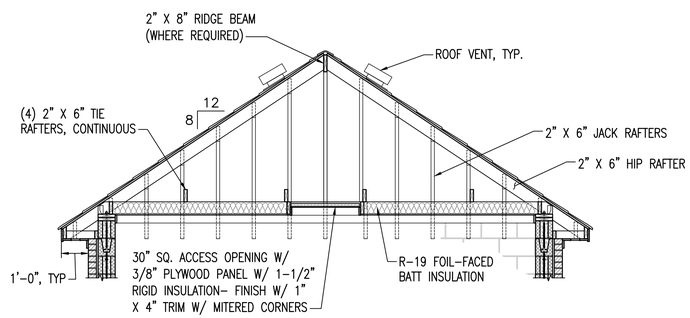

ROOF SECTION B

SCALE: 3/8" = 1'-0"

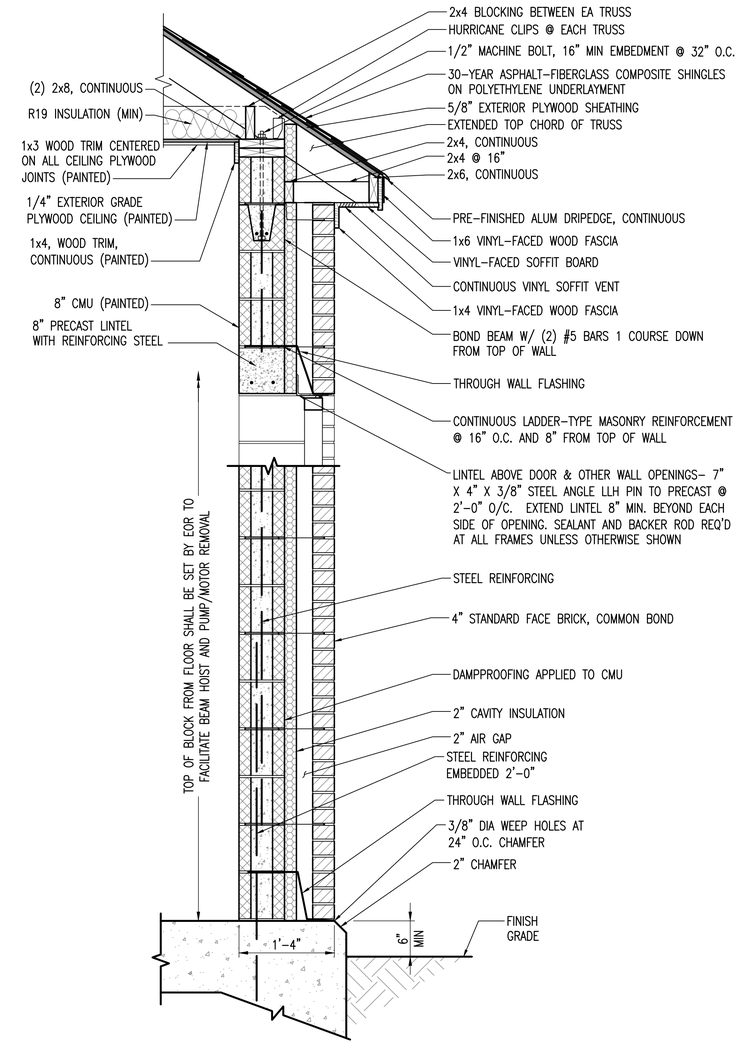

TYPICAL WALL SECTION

SCALE: 1" = 1'-0"

GENERAL ARCHITECTURAL NOTES:

1. SANITARY SEWER PUMP STATION BUILDINGS SHALL BE DESIGNED USING THE FOLLOWING CODES AND REFERENCES: VCC/VUSBC (2012) - USE GROUP U, CONSTRUCTION TYPE V-B, RISK CATEGORY III.
2. OVERALL EXTERIOR DIMENSIONS MAY VARY ACCORDING TO STATION TYPE AND INDIVIDUAL PROJECT REQUIREMENTS.
3. ALL WOOD TRIM SHALL BE GRADE B OR BETTER.
4. SHINGLES SHALL BE GAF 30-YEAR TIMBERLINE SERIES OR APPROVED EQUAL.
5. PRE-ENGINEERED WOOD TRUSSES MAY BE USED IN LIEU OF RAFTER SYSTEM SHOWN.
6. SIZE LOUVER WITH GRAVITY DAMPER TO ALLOW NO MORE THAN 0.01 TO 0.02 INCH W.G. WHEN ALL EXHAUST FANS ARE RUNNING AND THE DOOR(S) ARE CLOSED. MOUNT BOTTOM 1 BLOCK COURSE ABOVE FINISHED FLOOR.

NANSEMOND 1646 SUFFOLK 1742 19 74 CITY of SUFFOLK, VIRGINIA

CITY OF SUFFOLK, VIRGINIA

DEPARTMENT OF PUBLIC UTILITIES
442 W. WASHINGTON STREET
SUFFOLK, VA 23434

PUBLIC FACILITIES MANUAL VOLUME II

WASTEWATER PUMP STATION PROTOTYPE DRAWINGS

TYPE 1

WET WELL / DRY WELL PUMP STATION

PEAK FLOW ≧ 500 GPM
OR MOTOR SIZE ≧ 30 HP

ARCHITECTURAL ELEVATIONS AND SECTIONS

0 1' 2' 3' 5'
SCALE: 3/8" = 1'-0"
0 6" 1' 2'
SCALE: 1" = 1'-0"

D.P.U. DETAIL No.
PS-1
SHEET 3 of 4

Scale: AS NOTED | 2017 RELEASE 1

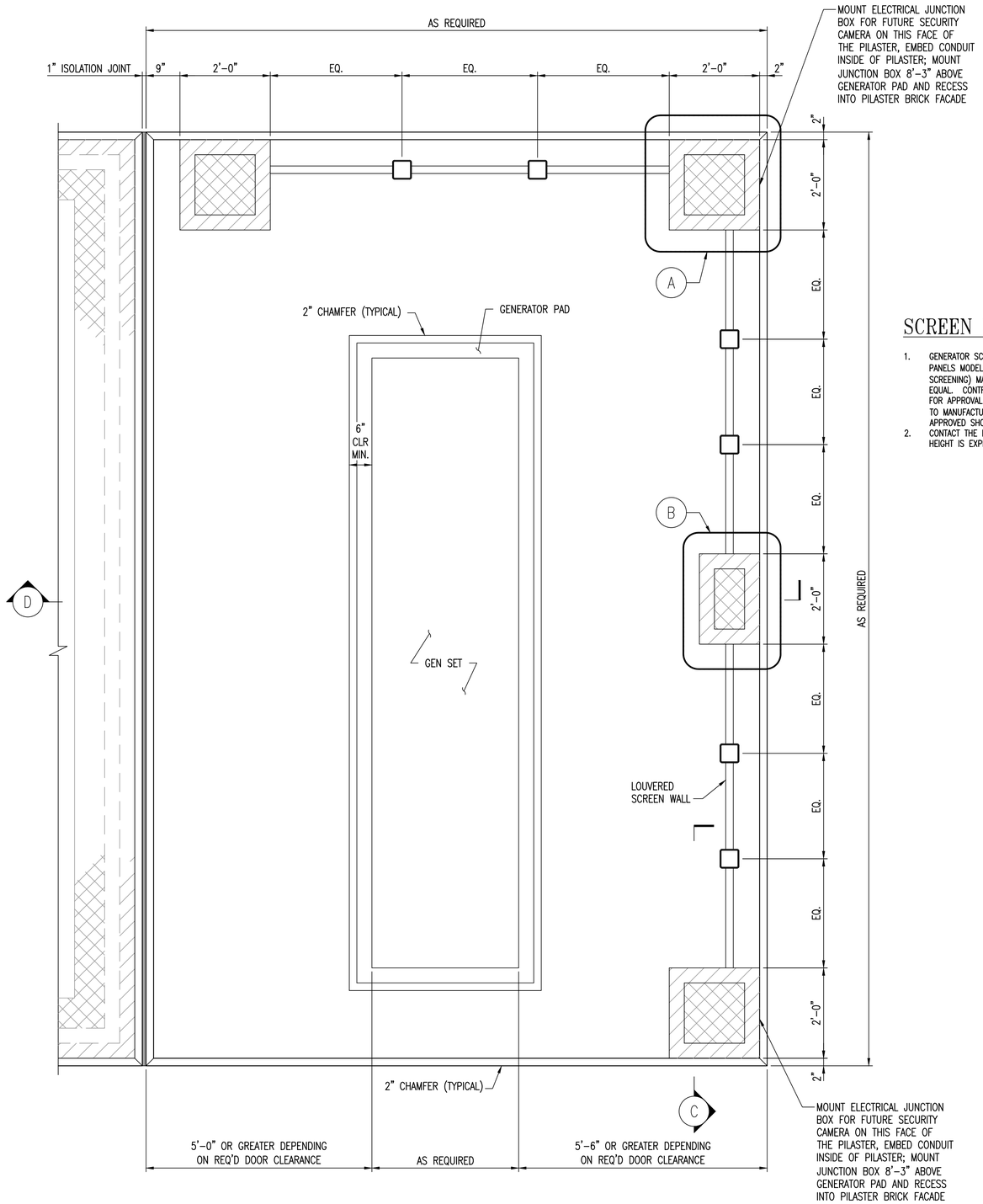

0 1' 2' 3'
SCALE: 3/4" = 1'-0"

GENERATOR PLAN
SCALE: 3/4" = 1'-0"

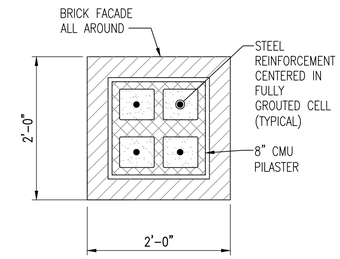

ENLARGED DETAIL A
SCALE: 1" = 1'-0"

0 6" 1' 2'
SCALE: 1" = 1'-0"

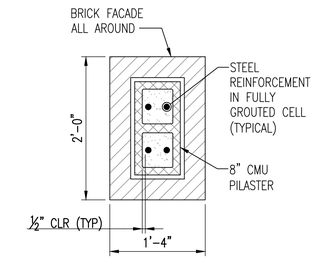

ENLARGED DETAIL B
SCALE: 1" = 1'-0"

SCREEN WALL NOTES:

1. GENERATOR SCREEN WALL SHALL BE ANODIZED ALUMINUM PANELS MODEL TOTAL ECLIPSE (100 PERCENT VISUAL SCREENING) MANUFACTURED BY AMETCO OR APPROVED EQUAL. CONTRACTOR TO SUBMIT COLOR SAMPLES TO CITY FOR APPROVAL PRIOR TO ORDERING. INSTALL ACCORDING TO MANUFACTURER'S INSTALLATION INSTRUCTIONS AND APPROVED SHOP DRAWINGS.
2. CONTACT THE DEPARTMENT FOR DIRECTION IF GENERATOR HEIGHT IS EXPECTED TO EXCEED SCREEN WALL HEIGHT.

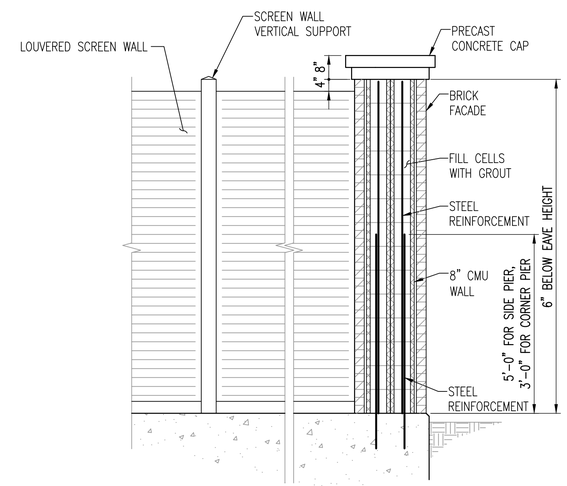

0 1' 2' 4'
SCALE: 1/2" = 1'-0"

SECTION C
SCALE: 1/2" = 1'-0"

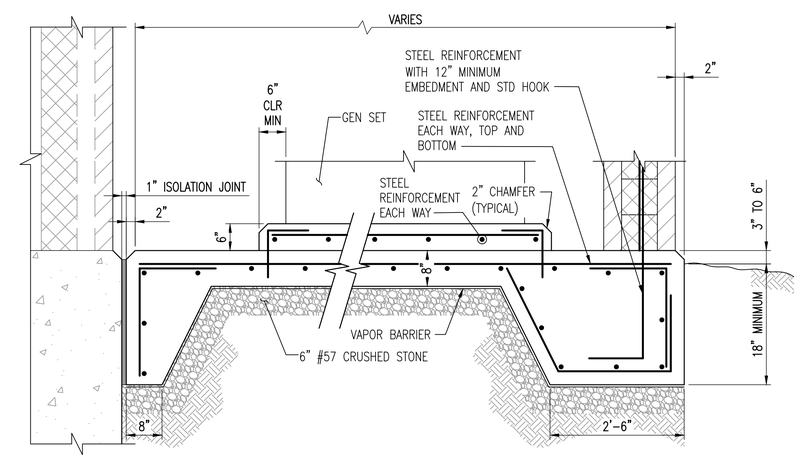

0 1' 2' 3'
SCALE: 3/4" = 1'-0"

SECTION D
SCALE: 3/4" = 1'-0"

NANSEMOND 1646 SUFFOLK 1742
19 74
CITY of SUFFOLK, VIRGINIA

CITY OF SUFFOLK, VIRGINIA

DEPARTMENT OF PUBLIC UTILITIES
442 W. WASHINGTON STREET
SUFFOLK, VA 23434

PUBLIC FACILITIES MANUAL VOLUME II

WASTEWATER PUMP STATION PROTOTYPE DRAWINGS

TYPE 1

WET WELL / DRY WELL PUMP STATION

PEAK FLOW ≧ 500 GPM
OR MOTOR SIZE ≧ 30 HP

GENERATOR PAD/SLAB AND SCREEN WALL PLAN AND SECTIONS

D.P.U. DETAIL No.
PS-1
SHEET 4 of 4

Scale: As Noted | 2017 RELEASE 1

APPENDIX G

PUMP STATIONS

TYPE 2

This page intentionally left blank.

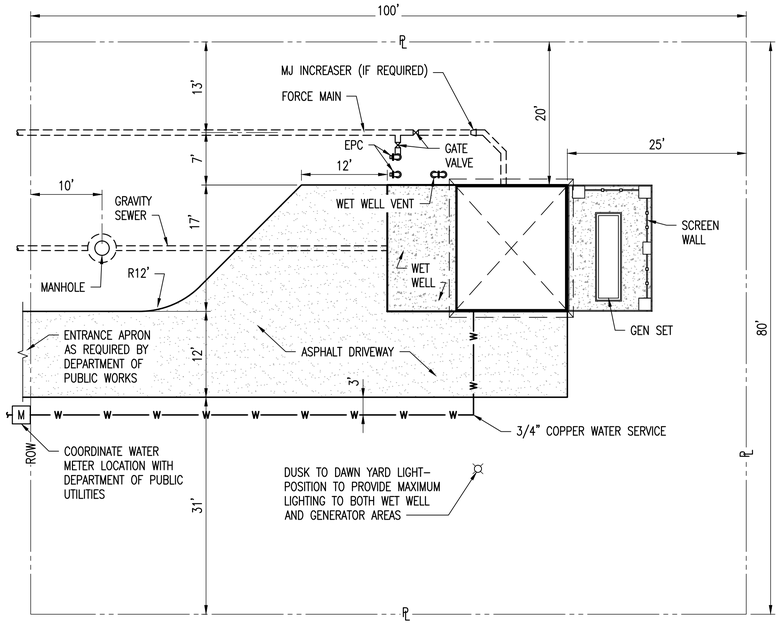

TYPICAL SITE PLAN

SCALE: 1" = 10'

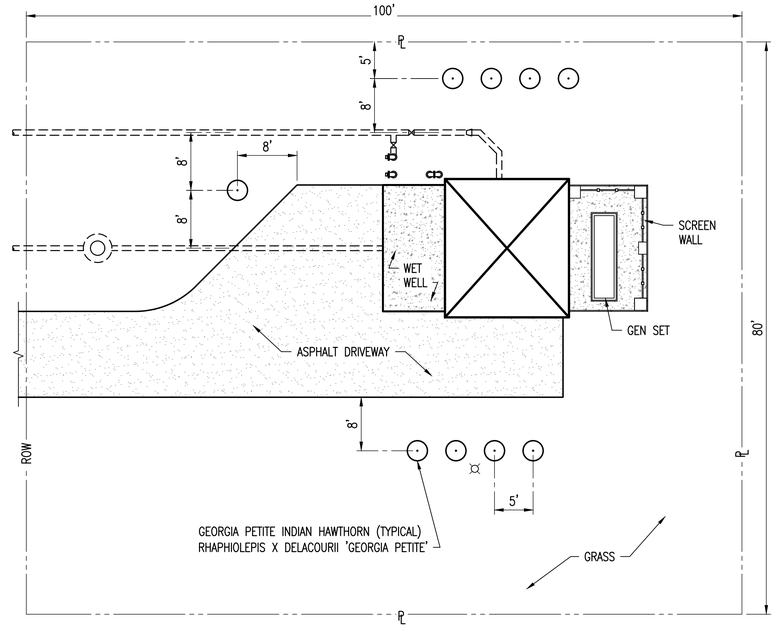

TYPICAL LANDSCAPING PLAN

SCALE: 1" = 10'

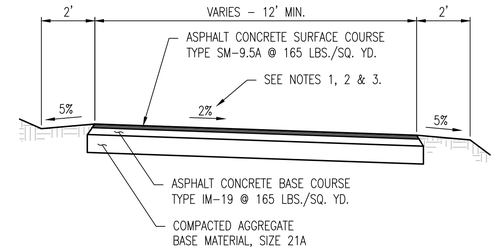

ASPHALT PAVEMENT SECTION

NOT TO SCALE

NOTES:
1. SLOPE DRIVEWAY TO MATCH DIRECTION OF EXISTING DRAINAGE PATTERNS.
2. DO NOT BLOCK EXISTING DRAINAGE.
3. CROSS SLOPE IS SHOWN FOR ILLUSTRATION PURPOSES: IF CROWN IS INDICATED BY EXISTING TOPOGRAPHY, THEN USE 2% CROWN SLOPE.
4. PAVEMENT AND AGGREGATE BASE THICKNESSES SHALL BE DESIGNED BY A GEOTECHNICAL ENGINEER.

ABBREVIATIONS

AFF	ABOVE FINISHED FLOOR
ATS	AUTOMATIC TRANSFER SWITCH
CB	SERVICE DISCONNECT
CLR	CLEAR
DN	DOWN
LP	LIGHTING PANEL
M/CT	METER AND CT CABINET
PCP	PUMP CONTROL PANEL
SPD	SURGE PROTECTION DEVICE
VFD	VARIABLE FREQUENCY DRIVE
XFMR	TRANSFORMER

GENERAL NOTES

1. THESE GUIDANCE DOCUMENTS INDICATE MINIMUM BUILDING AND CLEARANCE DIMENSIONS, OVERALL EQUIPMENT AND PIPING LAYOUTS, AND PUMP STATION WET WELL/CONTROL DEPTHS REQUIRED TO ALLOW OPTIMUM PERFORMANCE WHEN USED WITH THE DEPARTMENT'S STANDARD CONTROLS SPECIFICATIONS AND DRAWINGS.
2. THE ENGINEER OF RECORD IS RESPONSIBLE TO INCLUDE ANY AND ALL OTHER DESIGN ITEMS (SUPPORTS, DETAILS, STRENGTHS, ANCILLARY ITEMS, ETC.) AS MAY BE NECESSARY TO PROVIDE A COMPLETE DESIGN.
3. CAST–IN–PLACE CONCRETE WORK AND PUMP STATION/VALVE VAULT FOUNDATIONS ARE REQUIRED TO BE DESIGNED BY A REGISTERED PROFESSIONAL ENGINEER LICENSED IN THE COMMONWEALTH OF VIRGINIA QUALIFIED TO DO SO WITHIN THEIR AREA OF PRACTICE.
4. COORDINATE ALL ELECTRICAL AND INSTRUMENTATION ITEMS WITH THE CITY OF SUFFOLK STANDARD INSTRUMENTATION AND CONTROL DRAWINGS AND SPECIFICATIONS.
5. PUMP STATION SHALL BE DESIGNED USING THE CODES LISTED ON SHEET 3 OF 4, GENERAL ARCHITECTURAL NOTE 1.

SITE PLAN NOTES

1. LOCATION OF PUMP STATION AND OTHER FEATURES SHOWN ON THESE PLANS IS SCHEMATIC AND SUBJECT TO CHANGE ACCORDING TO SPECIFIC SITE CONSTRAINTS. COORDINATE SITE LAYOUT WITH THE DEPARTMENT.
2. ALL PIPING ON PUMP STATION SITE SHALL BE DUCTILE IRON.
3. MAINTAIN A MINIMUM OF 6" ELEVATION DIFFERENCE BETWEEN NEW DRIVEWAY SURFACE AND FINISH FLOOR OF PUMP STATION TO PREVENT WATER INTRUSION ONTO THE PUMP STATION FLOOR.
4. ORIENTATION OF GENERATOR AND SCREEN WALL SHALL BE APPROVED BY THE DEPARTMENT FOR EACH SITE.

CONTROL SYSTEM NOTES

1. PUMP STATION DESIGN SHALL USE THE CITY OF SUFFOLK DEPARTMENT OF PUBLIC UTILITIES' (DEPARTMENT) STANDARD CONTROL SYSTEM SPECIFICATIONS AND DRAWINGS.
2. CONTROL SYSTEM STANDARD SPECIFICATIONS AND DRAWINGS SHALL BE AUGMENTED WITH ADDITIONAL PROJECT–SPECIFIC INSTRUMENTATION AND CONTROL SPECIFICATION AND DRAWINGS AS MAY BE NECESSARY TO PROVIDE A COMPLETE DESIGN.
3. PUMP STATION FLOW CONTROLS USE A PRESSURE TRANSDUCER AND A TWO–FLOAT BACKUP SYSTEM WITH A THIRD FLOAT TO INDICATE A HIGH WATER ALARM CONDITION.
4. WETWELL DEPTH IS A FUNCTION OF THE INCOMING SEWER INVERT ELEVATION AND PUMP CONTROL ELEVATIONS AND SHALL BE CALCULATED AS FOLLOWS:
   - A. LAG PUMP ON LEVEL IS SET 12–INCHES BELOW INVERT OF INFLUENT GRAVITY SEWER.
   - B. LEAD PUMP ON LEVEL IS SET 6–INCHES BELOW LAG PUMP ON LEVEL.
   - C. PUMP OFF LEVEL IS SET TO ALLOW AN OPERATING RANGE CALCULATED BY MULTIPLYING THE AVERAGE FLOW RATE TIMES A 20–MINUTE DETENTION TIME.
   - D. FLOAT MODE STOP (LOWER FLOAT) LEVEL SHALL BE SET 6–INCHES BELOW PUMP OFF LEVEL.
   - E. MINIMUM WATER LEVEL SHALL BE SET AT 6–INCHES BELOW FLOAT MODE STOP LEVEL.
   - F. MINIMUM PUMP INTAKE SUBMERGENCE SHALL BE CALCULATED FROM THE MINIMUM WATER LEVEL PLUS THE GREATER OF ONE OF THE TWO FOLLOWING DIMENSIONS:
     - i. PUMP MANUFACTURER'S RECOMMENDATION FOR THIS SPECIFIC PROJECT.
     - ii. AS CALCULATED USING HYDRAULIC INSTITUTE STANDARDS FOR MINIMUM SUBMERGENCE.
   - G. TYPE 2 SUCTION INTAKE SHALL BE AS SET BY PUMP MANUFACTURER.
5. PUMP STATION CONTROLS UTILIZE A BACKUP TWO FLOAT SYSTEM CONSISTING OF PUMPS OFF AND PUMPS ON. FLOAT LEVELS SHALL BE SET AS FOLLOWS:
   - A. FLOAT MODE STOP (LOWER FLOAT) LEVEL SHALL BE SET 6–INCHES BELOW THE PUMP OFF LEVEL. ENSURE THAT THIS LEVEL DOES NOT CAUSE PUMP TO LOSE PRIME.
   - B. FLOAT MODE START (INTERMEDIATE FLOAT) LEVEL SHALL BE SET 6–INCHES BELOW THE INCOMING SEWER INVERT ELEVATION.
6. HIGH LEVEL FLOAT ALARM (HIGHEST FLOAT) SHALL BE SET AT THE INVERT OF THE INCOMING SEWER PIPE.
7. WET WELL FLOOR LEVEL SHALL BE CONSIDERED AS 0.00 DEPTH.
8. WET WELL LEVEL TRANSDUCER BOTTOM SHALL BE SET AT 1.00 FOOT ABOVE THE WET WELL FLOOR. CONTROL PANEL LEVEL INDICATOR SHALL BE CALIBRATED SO THAT THE BOTTOM OF THE LEVEL TRANSDUCER INDICATES A LEVEL OF 1.00 FOOT.
9. SHOW ALL PUMP STATION CONTROL SET LEVELS AS ELEVATIONS ON A DIAGRAM ON THE PLANS. INCLUDE FORCE MAIN PRESSURE TRANSDUCER TAP ELEVATION AND PUMP STATION SERVICE AREA HIGH WATER OVERFLOW ELEVATION.

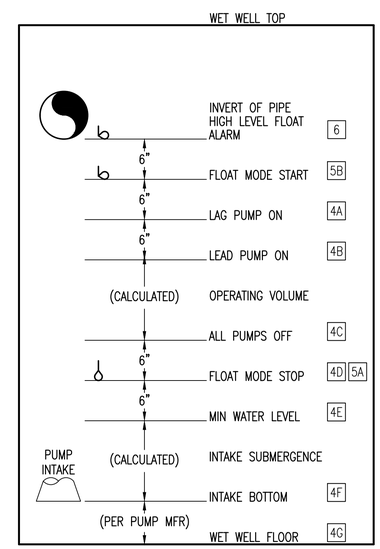

(#X REFER TO CONTROL SYSTEM NOTES THIS SHEET.)

PUMP STATION CONTROL SET LEVELS

NOT TO SCALE

NANSEMOND 1646 SUFFOLK 1742 19 74 CITY of SUFFOLK, VIRGINIA

CITY OF SUFFOLK, VIRGINIA

DEPARTMENT OF PUBLIC UTILITIES
442 W. WASHINGTON STREET
SUFFOLK, VA 23434

PUBLIC FACILITIES MANUAL VOLUME II

WASTEWATER PUMP STATION PROTOTYPE DRAWINGS

TYPE 2

SUBMERSIBLE PUMP STATION

PEAK FLOW < 500 GPM
MOTOR SIZE < 30 HP

SITE PLAN, LANDSCAPING PLAN AND GENERAL NOTES

0 5' 10' 20'
SCALE: 1" = 10'

D.P.U. DETAIL No.
PS-2
SHEET 1 of 4

Scale: 1" = 10' | 2017 RELEASE 1

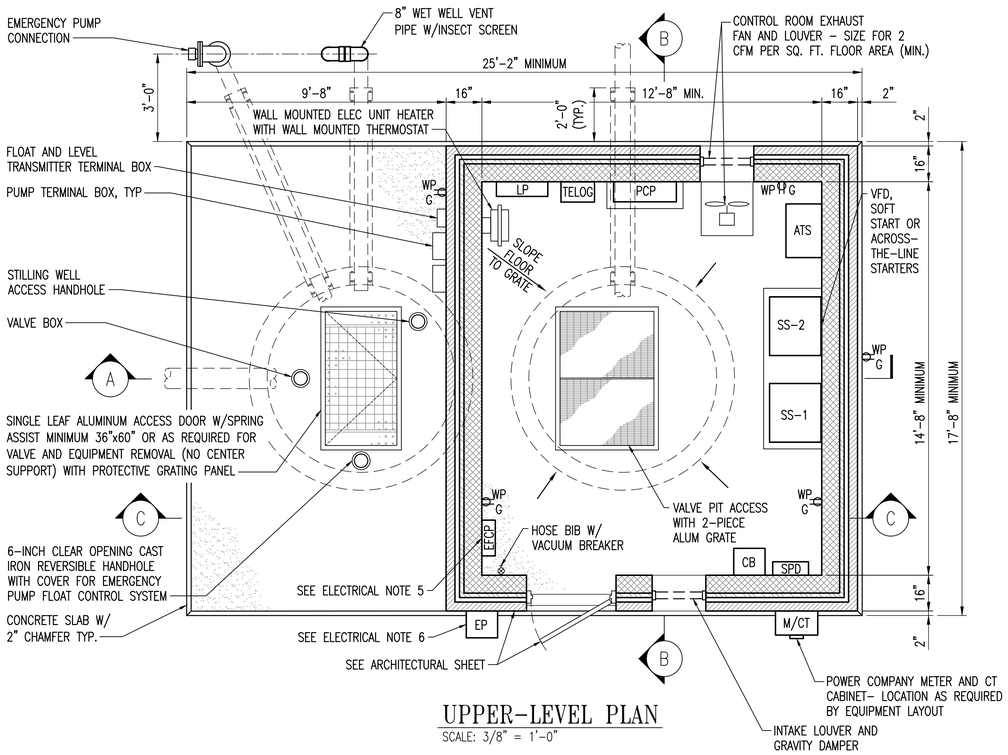

UPPER-LEVEL PLAN

SCALE: 3/8" = 1'-0"

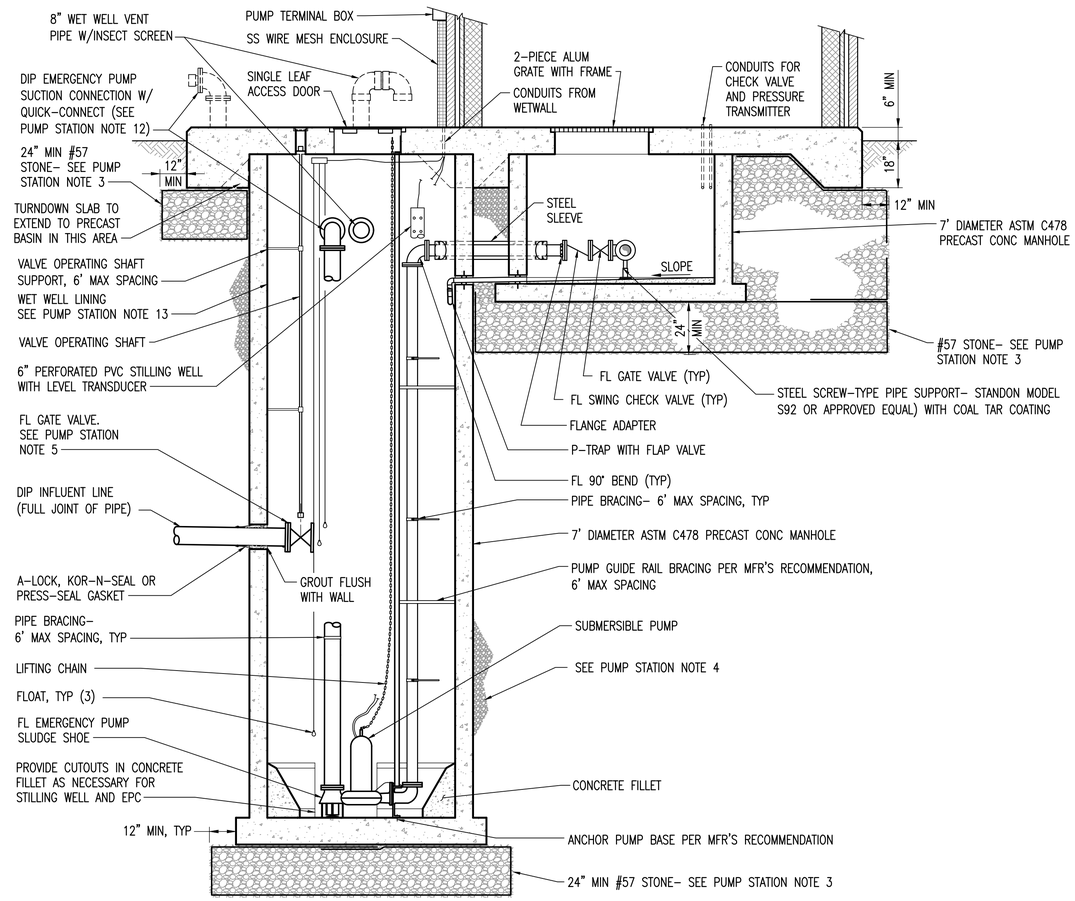

SECTION A

SCALE: 3/8" = 1'-0"

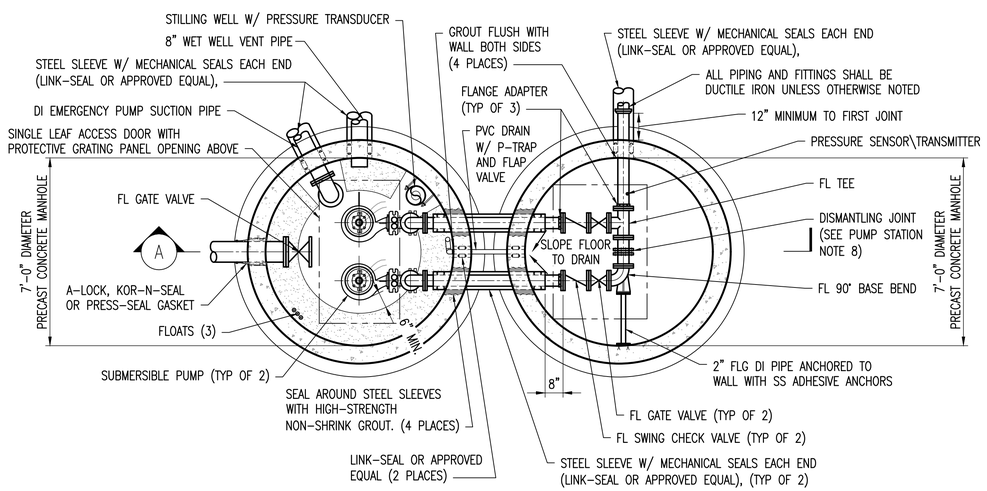

LOWER-LEVEL PLAN

SCALE: 3/8" = 1'-0"

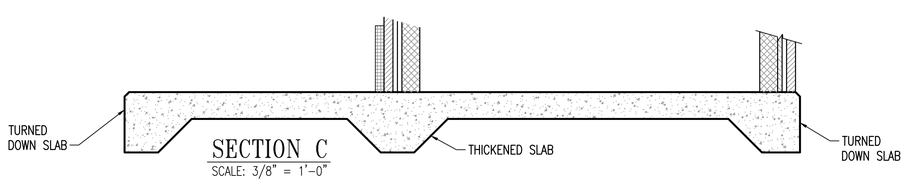

SECTION C

SCALE: 3/8" = 1'-0"

PUMP STATION NOTES

1. DIMENSIONS SHOWN ARE MINIMUMS.
2. ENGINEER OF RECORD (EOR) SHALL PERFORM A COMPLETE DESIGN OF PUMP STATION TO SUIT ACTUAL CONDITIONS, CODES AND THE PFM V-II.
3. ENCAPSULATE #57 STONE WITH NON-WOVEN NEEDLE-PUNCHED SEPARATION GEOTEXTILE, MIRAFI 140N OR APPROVED EQUAL. LAP 2'. PUMP STATION FOUNDATION DESIGN BY A VA. LICENSED GEOTECHNICAL ENGINEER WILL BE CONSIDERED IN LIEU OF FOUNDATION SHOWN.
4. FILL EXCAVATION IN 6-INCH LIFTS WITH VDOT TYPE 1 SELECT FILL OR VDOT 21A STONE. COMPACT TO NOT LESS THAN 95% OF MAXIMUM DRY DENSITY AS DETERMINED BY ASTM D698 STANDARD PROCTOR TEST METHOD.
5. GATE VALVES LARGER THAN 8-INCHES SHALL BE SUPPORTED.
6. ALL PIPE JOINTS SHALL BE RESTRAINED/FLANGED.
7. RESTRAINED FLEXIBLE SLEEVE COUPLINGS MAY BE USED TO FACILITATE PIPE AND FITTING ASSEMBLY.
8. 3-HOLE TRIANGULAR EPOXY COATED FLANGE LUG, ASTM A36. WITH 3/4" DIAMETER ASTM A-193, GRADE B7, ROD WITH HEAVY HEX NUT AND WASHER, 2-RODS, 2 LUGS PER FLANGE.
9. PROVIDE 45°-60° CONCRETE FILLETS IN ACCORDANCE WITH HYDRAULIC INSTITUTE (H.I.) STANDARDS.
10. ALL METAL HARDWARE IN WET WELL SHALL BE TYPE 316L STAINLESS STEEL.
11. ALL BRACING AND OTHER ATTACHMENTS INSIDE THE WET WELL SHALL BE HILTI HAS WITH HILTI HIT-RE 500 EPOXY ADHESIVE OR APPROVED EQUAL.
12. EMERGENCY PUMP SUCTION PIPE SHALL BE SIZED BY THE EOR BASED ON PUMP STATION CAPACITY AND PORTABLE PUMP EQUIPMENT AVAILABLE FROM THE DEPARTMENT OF PUBLIC UTILITIES (DPU).
13. CONTACT DPU FOR APPROVED WET WELL LINER.
14. WET WELL HATCH SHALL BE PROVIDED WITH THE HATCH MANUFACTURER'S PAINTED ALUMINUM FALL PROTECTION GRATING SYSTEM.

ELECTRICAL NOTES

1. ELECTRICAL/CONTROL EQUIPMENT SIZES SHOWN WILL VARY WITH ACTUAL PUMP STATION REQUIREMENTS. ENGINEER SHALL SHOW ACTUAL EQUIPMENT SELECTED DRAWN TO SCALE ON ELECTRICAL DRAWINGS.
2. ALL ELECTRICAL/CONTROL EQUIPMENT NOT WALL OR CEILING MOUNTED SHALL BE INSTALLED ON A 4" HIGH HOUSEKEEPING PAD.
3. REFER TO STANDARD TYPICAL PUMP STATION NOTES AND CIVIL SITE PLAN SHEET FOR CONTROL SYSTEM NOTES AND SET LEVEL SCHEMATIC.
4. THE CONTROL ROOM UNIT HEATER SHALL HAVE A WALL-MOUNTED (AND ACCESSIBLE) THERMOSTAT. THE CONTROL ROOM UNIT HEATER THERMOSTAT RANGE SHALL HAVE A MINIMUM SPAN OF 50-90 DEGREES F. THE CONTROL ROOM UNIT HEATER THERMOSTAT SHALL BE INITIALLY SET AT 50 DEGREES F.
5. CONTROL ROOM EXHAUST FAN PANEL, SEE PFM V-II STANDARD DETAIL 455.
6. PUMP STATION ENTRANCE PANEL, SEE PFM V-II STANDARD DETAIL 457.

WP G — DUPLEX RECEPTACLE (120V, 20A) GFCI, WEATHERPROOF, MOUNT 48" AFF

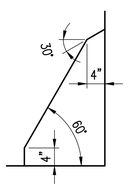

CONCRETE FILLET DETAIL

NOT TO SCALE

NANSEMOND 1646 SUFFOLK 1742 19 74 CITY of SUFFOLK, VIRGINIA

CITY OF SUFFOLK, VIRGINIA

DEPARTMENT OF PUBLIC UTILITIES
442 W. WASHINGTON STREET
SUFFOLK, VA 23434

PUBLIC FACILITIES MANUAL VOLUME II

WASTEWATER PUMP STATION PROTOTYPE DRAWINGS

TYPE 2

SUBMERSIBLE PUMP STATION

PEAK FLOW < 500 GPM
MOTOR SIZE < 30 HP

PLANS, SECTIONS AND NOTES

0 1' 2' 3' 5'
SCALE: 3/8" = 1'-0"

D.P.U. DETAIL No.
PS-2
SHEET 2 of 4

Scale: 3/8" = 1'-0" | 2017 RELEASE 1

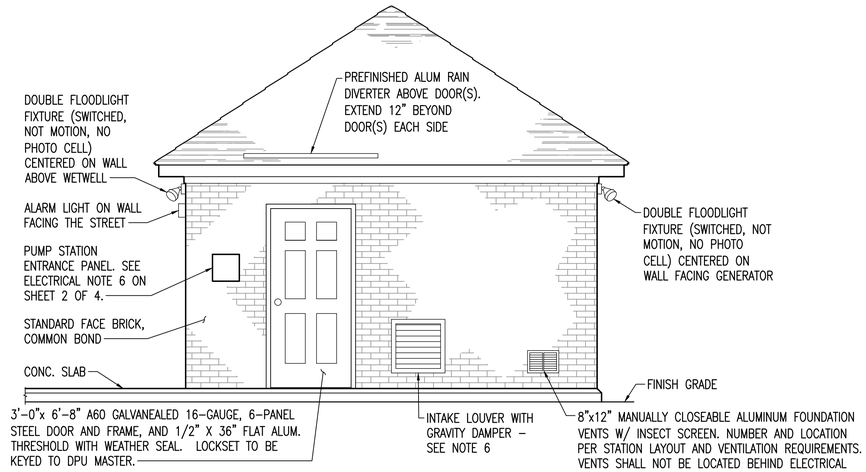

ELEVATION A

SCALE: 3/8" = 1'-0"

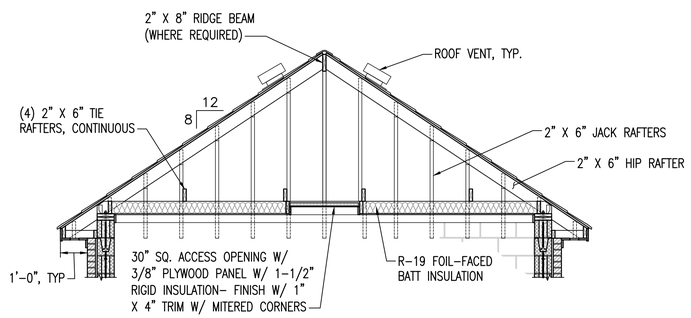

ROOF SECTION A

SCALE: 3/8" = 1'-0"

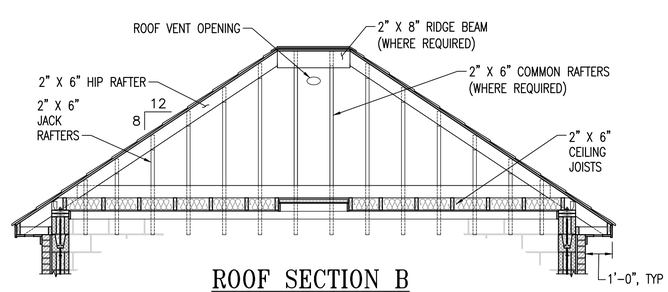

ROOF SECTION B

SCALE: 3/8" = 1'-0"

GENERAL ARCHITECTURAL NOTES:

1. SANITARY SEWER PUMP STATION BUILDINGS SHALL BE DESIGNED USING THE FOLLOWING CODES AND REFERENCES: VCC/VUSBC (2012) - USE GROUP U, CONSTRUCTION TYPE V-B, RISK CATEGORY III.
2. OVERALL EXTERIOR DIMENSIONS MAY VARY ACCORDING TO STATION TYPE AND INDIVIDUAL PROJECT REQUIREMENTS.
3. ALL WOOD TRIM SHALL BE GRADE B OR BETTER.
4. SHINGLES SHALL BE GAF 30-YEAR TIMBERLINE SERIES OR APPROVED EQUAL.
5. PRE-ENGINEERED WOOD TRUSSES MAY BE USED IN LIEU OF RAFTER SYSTEM SHOWN.
6. SIZE LOUVER WITH GRAVITY DAMPER TO ALLOW NO MORE THAN 0.01 TO 0.02 INCH W.G. WHEN ALL EXHAUST FANS ARE RUNNING AND THE DOOR(S) ARE CLOSED. MOUNT BOTTOM 1 BLOCK COURSE ABOVE FINISHED FLOOR.

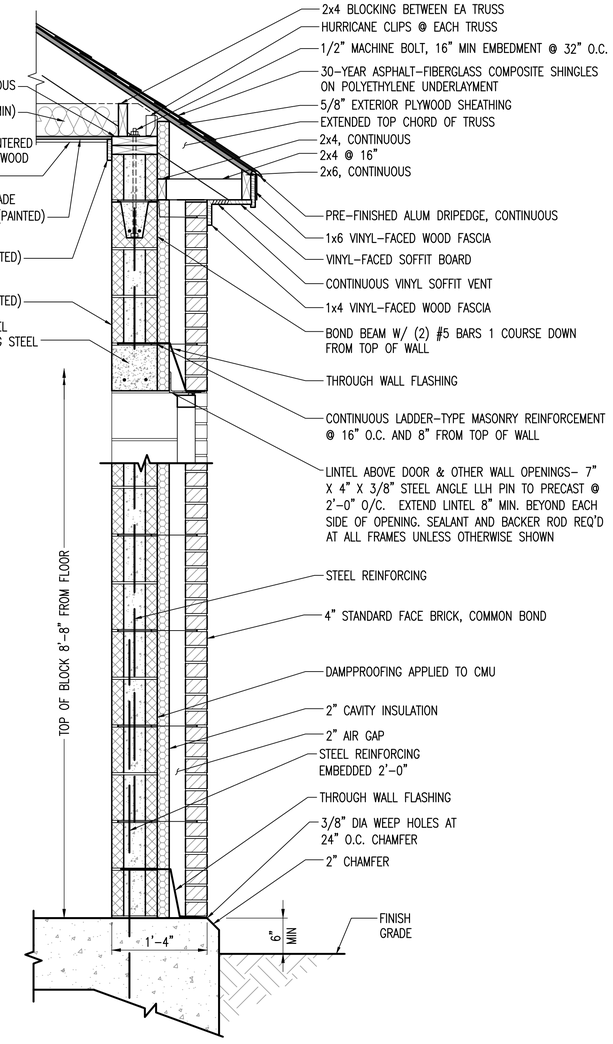

TYPICAL WALL SECTION

SCALE: 1" = 1'-0"

NANSEMOND 1646 SUFFOLK 1742 19 74 CITY of SUFFOLK, VIRGINIA

CITY OF SUFFOLK, VIRGINIA

DEPARTMENT OF PUBLIC UTILITIES
442 W. WASHINGTON STREET
SUFFOLK, VA 23434

PUBLIC FACILITIES MANUAL VOLUME II

WASTEWATER PUMP STATION PROTOTYPE DRAWINGS

TYPE 2

SUBMERSIBLE PUMP STATION

PEAK FLOW < 500 GPM
MOTOR SIZE < 30 HP

ARCHITECTURAL ELEVATIONS AND SECTIONS

0 1' 2' 3' 5'
SCALE: 3/8" = 1'-0"
0 6" 1' 2'
SCALE: 1" = 1'-0"

D.P.U. DETAIL No.
PS-2
SHEET 3 of 4

Scale: AS NOTED | 2017 RELEASE 1

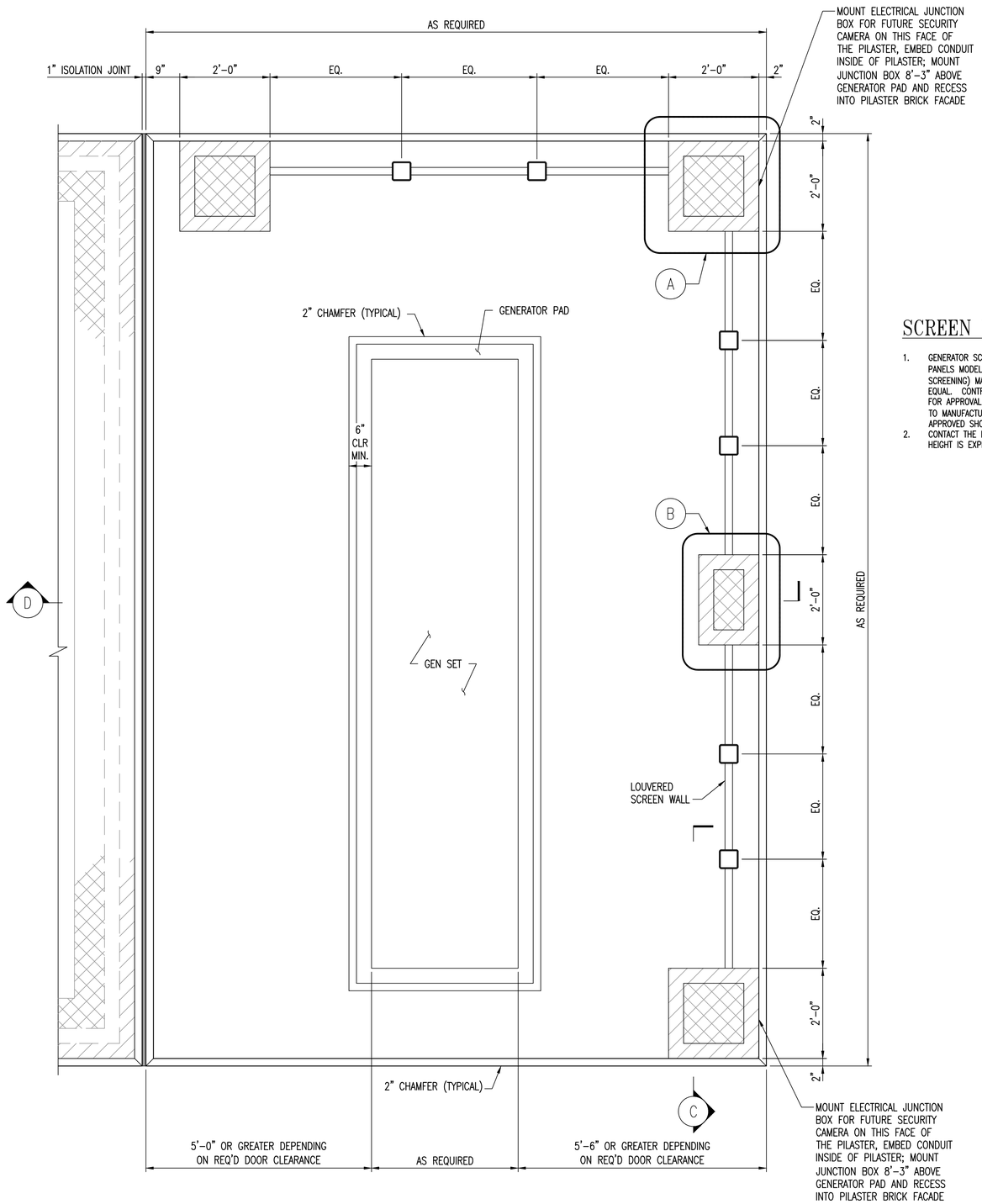

0 1' 2' 3'
SCALE: 3/4" = 1'-0"

GENERATOR PLAN
SCALE: 3/4" = 1'-0"

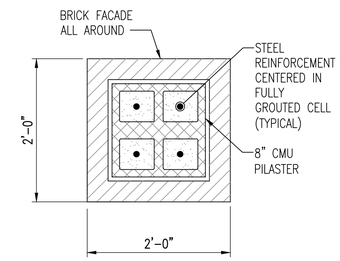

ENLARGED DETAIL A
SCALE: 1" = 1'-0"

0 6" 1' 2'
SCALE: 1" = 1'-0"

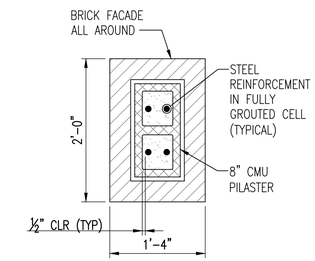

ENLARGED DETAIL B
SCALE: 1" = 1'-0"

SCREEN WALL NOTES:

1. GENERATOR SCREEN WALL SHALL BE ANODIZED ALUMINUM PANELS MODEL TOTAL ECLIPSE (100 PERCENT VISUAL SCREENING) MANUFACTURED BY AMETCO OR APPROVED EQUAL. CONTRACTOR TO SUBMIT COLOR SAMPLES TO CITY FOR APPROVAL PRIOR TO ORDERING. INSTALL ACCORDING TO MANUFACTURER'S INSTALLATION INSTRUCTIONS AND APPROVED SHOP DRAWINGS.
2. CONTACT THE DEPARTMENT FOR DIRECTION IF GENERATOR HEIGHT IS EXPECTED TO EXCEED SCREEN WALL HEIGHT.

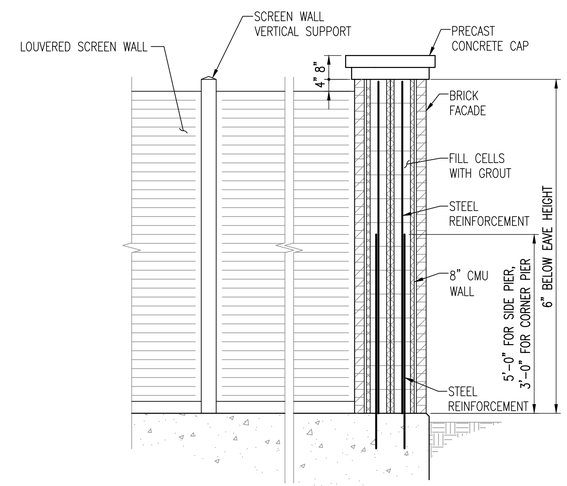

0 1' 2' 4'
SCALE: 1/2" = 1'-0"

SECTION C
SCALE: 1/2" = 1'-0"

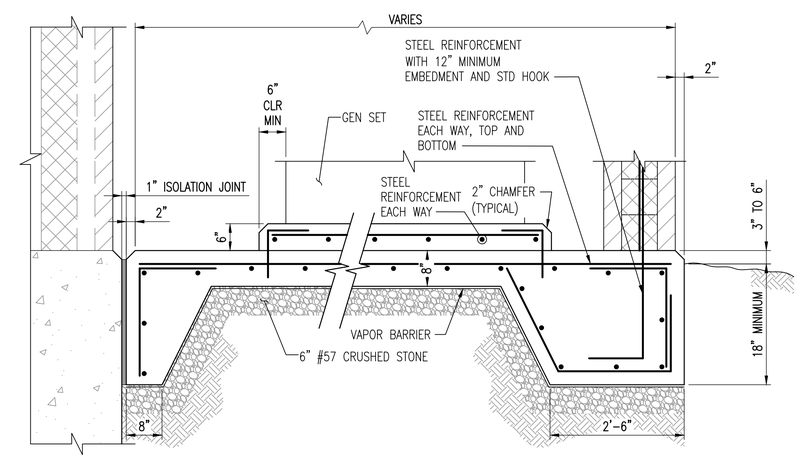

0 1' 2' 3'
SCALE: 3/4" = 1'-0"

SECTION D
SCALE: 3/4" = 1'-0"

NANSEMOND 1646 SUFFOLK 1742
19 74
CITY of SUFFOLK, VIRGINIA

CITY OF SUFFOLK, VIRGINIA

DEPARTMENT OF PUBLIC UTILITIES
442 W. WASHINGTON STREET
SUFFOLK, VA 23434

PUBLIC FACILITIES MANUAL VOLUME II

WASTEWATER PUMP STATION PROTOTYPE DRAWINGS

TYPE 2

SUBMERSIBLE PUMP STATION

PEAK FLOW < 500 GPM
MOTOR SIZE < 30 HP

GENERATOR PAD/SLAB AND SCREEN WALL PLAN AND SECTIONS

D.P.U. DETAIL No.
PS-2
SHEET 4 of 4

Scale: As Noted | 2017 RELEASE 1

APPENDIX H

CONSTANT SPEED DRIVE

SPECIFICATIONS AND DRAWINGS

This page intentionally left blank.

APPENDIX H

CONSTANT SPEED DRIVE SPECIFICATIONS

This page intentionally left blank.

SECTION 01300

CS-FVNR STATION SUBMITTALS

PART 1 - GENERAL

1.01 GENERAL

A. These Constant Speed-Full Voltage Non Reversing (CS-FVNR) specifications are intended to be used for wastewater pump stations less than fifteen (15) horsepower in the City of Suffolk, Virginia.

B. Terms used or referred to herein are defined in Chapter 2 of the City of Suffolk Public Facilities Manual (PFM), Volume II. The term "Engineer" shall be the "Engineer of Record", the term "City" shall be the "City of Suffolk, Virginia" and the term "Department" shall be the City of Suffolk, VA, Department of Public Utilities".

C. Prior to beginning the Submittals review process, the Engineer shall provide the Contractor and the Department a complete list of Submittals required.

D. The Contractor shall submit to the Engineer and the Department for review and approval such submittals as are required for the proper control of work, including but not limited to those submittals in the Engineer's list, specified elsewhere in the Specifications, on the Project Drawings and in the PFM.

E. The Engineer shall maintain a complete updated submittal log and shall make the log available to the Contractor and the Department as requested. This log shall include the following items:

1. Submittal-Description and Number assigned.
2. Date to Engineer.
3. Date returned to Contractor (from Engineer).
4. Status of Submittal (Approved, Approved as Noted, Revise and Return, Rejected).
5. Date of Resubmittal and Return (as applicable).
6. Date material release (for fabrication).
7. Projected date of fabrication.
8. Projected date of delivery to site.
9. Status of O&M manuals submittal.
10. Specification Section.
11. Drawings Sheet Number.

1.02 TYPES OF SUBMITTALS

A. Shop drawings for manufactured or fabricated items, pipe layout or other schedules, diagrams and like material prepared specially for this project.

B. Product Data which include pre-printed material, manufacturer's descriptive literature, illustrations, catalog data, performance charts and the like intended to identify a part of the work but not necessarily prepared exclusively for this Project.

C. Samples which include physical examples of products, materials, assemblies or workmanship which are identical to a portion of the work and which establish standards for materials, workmanship, or appearance of the finished work.

D. Administrative data to include information required to support the administrative requirements of the Project as called for in the specifications.

E. Factory Acceptance Test (FAT) certification, Pre-Site Acceptance Test (Pre-SAT) results, and Site Acceptance Test (SAT) results. See Section 13010 for description of the FAT, Pre-SAT and SAT.

1.03 PROCEDURE FOR SUBMITTALS

A. Except where specifically stated otherwise all submittals shall be made to the Engineer for his approval. Submittals of all but administrative data shall be made in at least eight (8) copies. The Engineer shall provide to the Department two (2) copies for its review. The Department shall return one copy to the Engineer with the Department’s comments. Prior to approval of the submittals, the Engineer shall reconcile the Department’s comments. Two (2) copies of the submittal shall be retained by the Engineer and the other copies returned to the Contractor. Two (2) copies of all approved submittals shall be promptly provided to the Department. Submittals shall be complete for each component of work or system and shall include all inter-related portions of a system. At the completion of the project, the Engineer shall supply the Department with two (2) complete sets of all approved submittals as Record Copy.

B. Administrative data shall be submitted in triplicate (3 copies).

C. Electronic copies of submittals may be made in lieu of paper submittals. Record Copy shall be on CD and two (2) hard copies.

1.04 CONTRACTOR'S RESPONSIBILITY

A. It is the duty of the Contractor to check all Submittals prepared by or for him before submitting them to the Engineer for review. Each and every copy of the Submittals shall bear the Contractor's stamp showing that they have been checked. Submittals

submitted to the Engineer without the Contractor's stamp shall be returned to the Contractor for conformance with this requirement. Submittals shall indicate any deviations in the submittal from requirements of the Project Documents.

B. The Project Drawings shall not be reproduced for the purpose of making Submittals.

C. Determine and verify:

1. Field measurements.
2. Field construction criteria.
3. Catalog numbers and similar data.
4. Conformance with Specifications.

D. The Contractor shall furnish the Engineer a schedule of submittals fixing the respective dates of their submission, the beginning of manufacture, testing and installation of materials, supplies and equipment. This schedule shall indicate those submittals that are critical to the progress schedule.

E. The Contractor shall ensure that no work is begun on any item of work requiring an approved submittal until such approval is obtained.

F. The Contractor shall not begin any of the work covered by a drawing, data, or a sample returned marked "REVISE AND RETURN" OR "REJECTED" until a revision or correction thereof has been reviewed and returned to him, by the Engineer, with approval.

G. One approved copy of all submittals shall be held by the Contractor at the construction site.

H. Each submittal shall be assigned a sequential number by the Contractor, for purposes of easy identification, and shall retain its assigned number with appropriate subscript, on required resubmissions. The assigned number shall consist of the specification section number where the item is specified, followed by a sequential number indicating the number of submittals in that Section (e.g., 03300-11 is the 11th separate submittal for items specified in Section 03300). Resubmittals shall be identified with the same number as the original submittal, followed by the subscript R1, R2, etc. All products and materials submitted shall be clearly identified with the appropriate equipment name and number as it appears in the Project Documents.

I. The Contractor shall submit to the Engineer all drawings and schedules sufficiently in advance of construction requirements. The Engineer will endeavor to provide a written response within 14 calendar days from receipt of submittals.

J. All submittals shall be accompanied with a transmittal letter prepared in duplicate containing the following information:

1. Date.
2. Project Title and Number.
3. Contractor's name and address.
4. The Number of each Shop Drawing, Project Data, and Sample submitted.
5. Notification of Deviations from Project Documents.
6. Submittal Log Number conforming to Specification Section Numbers.

K. The Contractor shall be responsible for and bear all costs which may result from the ordering of any material or from proceeding with any part of work prior to the receipt of the approved submittals.

L. The Contractor shall be fully responsible for observing the need for and making any changes in the arrangement of piping, connections, wiring, manner of installation, etc., which may be required by the materials/equipment he proposed to supply both as pertains to his work and any work affected under other parts, heading, or divisions of drawings and specifications at no cost to the Owner.

1.05 ENGINEER REVIEW OF SUBMITTALS

A. The Engineer review of submittals will be only for conformance with the design concept of the Project and for general compliance with the information given in the Project Documents. The Engineer review and approval will not constitute an approval of dimensions, quantities, and details of the material, equipment, device, or item shown.

B. The review of submittals will be general, and shall not be construed:

1. as permitting any departure from the Project requirements;
2. as relieving the Contractor of responsibility for any errors, including details, dimensions, and materials;
3. as approving departures from details furnished by the Engineer, except as otherwise provided herein.
4. as approving Contractor's means, methods, techniques, sequences or procedures of construction or to safety precautions or programs incident thereto.

C. When reviewed by the Engineer, each of the submittals will be identified as having received such review being so stamped and dated. Submittals stamped "REVISE AND RESUBMIT" and with required corrections shown will be returned to the Contractor for correction and resubmittal.

D. Resubmittals will be handled in the same manner as first submittals. On resubmittals the Contractor shall direct specific attention, in writing or on resubmitted submittals,

to revisions other than the corrections requested by the Engineer on previous submissions. The Contractor shall make any corrections required by the Engineer.

E. If the Contractor considers any correction indicated on the drawings to constitute a change to the Project Drawings or Specifications, the Contractor shall give written notice thereof to the Engineer.

F. When the submittals have been completed to the satisfaction of the Engineer and the Department, the Contractor shall carry out the construction in accordance therewith and shall make no further changes therein except upon written instructions from the Engineer and the Department.

G. No partial submittals will be reviewed. Partial submittals will be returned rejected unless otherwise agreed. Unless otherwise specifically permitted by the Engineer, make all submittals in groups containing all associated items for:

1. Systems
2. Processes
3. As indicated in specific specification sections.

1.06 SUBMITTALS

A. When used in the Project Documents, the term "Submittals" shall be all drawings, diagrams, illustrations, schedules and other data which are specifically prepared by or for Contractor to illustrate some portion of the Work and all illustrations, brochures, standard schedules, performance charts, instructions, diagrams, and other information prepared by a Supplier and submitted by Contractor to illustrate material or equipment for some portion of the Work.

B. Manufacturer's catalog sheets, brochures, diagrams, illustrations and other standard descriptive data shall be clearly marked to identify pertinent materials, product or models. Delete information which is not applicable to the Work by striking or cross-hatching.

C. Submittals shall be checked and coordinated with the work of all trades involved, before they are submitted for review by the Engineer and shall bear the Contractor's stamp of approval as evidence of such checking and coordination. Submittals provided without this stamp of approval shall be returned to the Contractor for resubmission.

D. Each Drawing shall have a blank area 3-1/2 inches by 3-1/2 inches, located adjacent to the title block for the shop drawing approval stamp. The title block shall display the following:

1. Project Title and Number

2. Name of project building or structure
3. Number and title of the shop drawing
4. Date of shop drawing or revision
5. Name of contractor and subcontractor submitting drawing
6. Supplier/manufacturer.
7. Separate detailer when pertinent
8. Specification title and number
9. Specification section
10. Project Drawing Number

E. If submittals show variations from project requirements because of standard shop practice or for other reasons, the CONTRACTOR SHALL DESCRIBE SUCH VARIATIONS IN HIS LETTER OF TRANSMITTAL. The transmittal letter shall delineate compliance and exceptions taken to Specifications and Project Drawings. If acceptable, proper adjustment in the project shall be implemented where appropriate. If the Contractor fails to describe such variations, he shall not be relieved of the responsibility for executing the work in accordance with the Specifications and Project Drawings.

F. Data on materials and equipment include, without limitation, materials and equipment lists, catalog data sheets, cuts, performance curves, diagrams, materials of construction and similar descriptive material. Materials and equipment lists shall give, for each item thereon, the name and location of the supplier or manufacturer, trade name, catalog reference, size, finish and all other pertinent data.

G. For all mechanical and electrical equipment furnished, the Contractor shall provide a list including the equipment name, and address and telephone number of the manufacturer's representative and Service Company so that service and/or spare parts can be readily obtained.

H. Should the Contractor propose exceptions to specified equipment or products, they shall submit an installation list to the Engineer along with the required shop drawings. The installation list shall include at least five installations where identical equipment has been installed and has been in operation for a period of at least three (3) years. Substitution requests shall conform to the requirements of Chapter 4.6 of this PFM.

I. Only the Engineer and the Department will utilize the color "red" in marking submittals.

J. Before Startup can be scheduled, the Contractor shall furnish to Engineer one (1) set of approved submittals, complete and up to date showing the permanent construction as actually made for all reinforcing and structural steel, miscellaneous metals, process and mechanical equipment, yard piping, electrical system and instrumentation system, for provision to the Department.

1.07 SAMPLES

A. The Contractor shall furnish, for the approval of the Engineer, samples as required by the project documents or requested by the Engineer. Samples shall be delivered to the Engineer as specified or directed. The Contractor shall prepay all shipping charges on samples. Materials or equipment for which samples are required shall not be used in work unless approved by the Engineer.

B. Samples shall be sufficient size and quantity to clearly illustrate:

1. Functional characteristics of the product, with integrally related parts and attachment devices.
2. Full range of color, texture and pattern.
3. A minimum of three samples of each item shall be submitted.

C. Each sample shall have a label indicating:

1. Name of project
2. Name of Contractor and Subcontractor
3. Material or Equipment Represented
4. Place of Origin
5. Name of Producer and Brand (if any)
6. Location of Project

(Samples of finished materials shall have additional marking that will identify them under the finished schedules).

D. The Contractor shall prepare a transmittal letter in triplicate for each shipment of samples containing the information required in paragraph 1.04 above. He shall enclose a copy of this letter with the shipment and send a copy of this letter to the Engineer. Approval of a sample shall be only for the characteristics or use named in such approval and shall not be constructed to change or modify any project requirements.

1.08 MANUFACTURER'S LIST

A. Within 30 days after receipt of a Notice to Proceed, and before ordering any equipment or materials, the Contractor shall submit to the Engineer (and the Department) for approval a complete list of proposed manufacturers and fabricators for all materials and equipment to be used in this Project. The purpose of this submittal is to allow the Engineer and the Department to predetermine the

acceptability of proposed suppliers before issuance of purchase orders by the Contractor. Submission and acceptance of the manufacturers' list shall neither relieve the Contractor from submitting detailed shop drawings and product data for all materials and equipment nor shall it constitute prior acceptance of any specific item of equipment prior to submittal of shop drawings. After submission and acceptance of the manufacturers' list, the Contractor shall not deviate from the named suppliers and manufacturers without written approval from the Engineer and the Department.

1.09 OPERATING AND MAINTENANCE INSTRUCTIONAL PERIODS

A. Particular sections of the Specifications require that the Contractor furnish qualified personnel to instruct the Owner's personnel in the proper operation and maintenance of equipment and systems provided in this project. Such instructional periods shall be for the duration of time specified and in accordance with the requirements of the individual sections of the Specifications and with the following paragraphs.

1.10 OPERATION AND MAINTENANCE MANUALS FOR EQUIPMENT AND PRODUCTS

A. General:

1. The Contractor shall furnish for the Engineer’s review three (3) Operation and Maintenance Manual draft copies, one copy of which shall be provided to the Department for review and comment. The Engineer shall reconcile the Department’s comments with his comments prior to approval. The final manual shall be approved by the Engineer and the Department.

2. The Contractor shall furnish to the Engineer (for the Department’s use) three copies of the approved Operation and Maintenance Manual at least fourteen (14) calendar days prior to startup.

B. Operations and Maintenance Manual Preparation:

1. Manuals shall include operation and maintenance information on all systems and items of equipment. The data shall consist of: catalogs, brochures, bulletins, charts, schedules, approved submittals corrected to as-built conditions and assembly drawings describing location, operation, maintenance, lubrication, operating weight, and other information necessary for the Owner to establish an effective operating and maintenance program. The following data shall also be included:

a. Title page giving name and location of facility, project drawings numbers, where shown and Specification Section where described.

b. Approved submittals of each piece of equipment.

c. Manufacturer's cuts and dimension drawings of each piece of equipment and details of all replacement parts.

d. Manufacturer's erection, operation and lubrication instructions for all equipment and apparatus, and complete listing of nameplate data.

e. Complete piping and interconnecting drawings.

f. Complete parts list with parts assembly drawing (preferably by exploded view), names and addresses of spare parts suppliers, recommended list of spare parts to be kept "in stock" and sample order forms for ordering spare parts. Lead time required for ordering parts shall be estimated.

g. Instructions with easily understood schematics or diagrams for disassembling and assembling the equipment for overhaul or repair.

h. The Contractor shall complete the three Forms A, B and C entitled “Equipment Registration, Parts List, and Maintenance Procedures Sheet” for each piece of equipment furnished under the project. These forms shall be included in the Operations and Maintenance Manual at the proper place. Example Forms A, B and C are included at the end of this section.

2. All items listed above that are of a sheet size of 8-1/2 inches by 11 inches or can be folded (no more than twice) to this size shall be bound in 2-inch maximum loose-leaf three-ring d-post type binders with clear plastic-pouch covers. The contents shall be fully indexed. All sheets shall have reinforced holes.

3. Submittal drawings 24 inches by 36 inches in size shall be folded to approximately 12 inches by 9 inches with drawing title box exposed along either edge. Submittal drawings descriptive of a single item of equipment shall be grouped together. All submittal drawings shall be placed in accordion-type folders and fully indexed on the outside of the folders in a neat and uniform manner.

4. All submittal drawings included in the binders and/or folders shall be those copies previously submitted for review and approval and shall bear the Engineer stamp of approval and comments as originally noted thereon.

C. Approval:

1. Subsequent to the Engineer of Record approval, the Contractor shall submit two complete sets of manuals, one paper and one searchable pdf, to the Engineer.

2. Startup will not be undertaken until approved Operation and Maintenance Manuals have been submitted.

3. Partial approvals of the final manual will not be made.

1.11 MANUFACTURER'S CERTIFICATES

A. General:

1. As specified in the various sections of these Specifications and herein, the Contractor shall furnish the Engineer with manufacturer's certificates stating that the equipment and products have been installed under either the continuous or periodic supervision of the manufacturer's field representative, that they have been adjusted and initially operated in the presence of the manufacturer's field representative, and that they are operating in accordance with the specified requirements, to the manufacturer's satisfaction. A copy of all manufacturers' certificates shall be bound in each Operation and Maintenance Manual.

2. A certificate submitted for equipment, a product, or component of a product, shall indicate test results proving that the equipment, product, or component of a product, meet the requirements of the project documents. An affidavit consisting of a statement by an official of the company manufacturing the equipment or product indicating that the information on the certificate is true and accurate shall accompany the certificate.

3. A statement originating from the Contractor, or any of his subcontractors, suppliers, or any other agent which merely indicates that a particular item of equipment, product, or component of a product, meets the requirements of the Project Documents shall not be considered a certificate. Any such submittal made in this manner will not be approved and the corresponding equipment, product, or component of a product, shall not be finally accepted.

4. Manufacturers' certificate shall be provided as required in individual sections.

B. Manufacturer's Representative:

1. The definition of "manufacturer's representative" shall be as follows: a representative from the manufacturer's plant, familiar with the actual problems of manufacturing, installing and operating the particular equipment or product and with enough years of experience in this field to determine the successful operation of the equipment or product.

2. As related to his obtaining the manufacturer's certificates, the Contractor shall include in this Project price the cost of furnishing competent and experienced manufacturer's representatives who shall represent the manufacturer on equipment and products furnished and installed under this project, to assist the Contractor to install, adjust, start up, and test the equipment and products in conformity with the Project Documents. After the equipment and products have been operated through the trial period for each phase of construction and before being put into permanent service, the manufacturer's representatives shall make all adjustments and tests required to provide that such equipment and products are in proper and satisfactory working order. This shall be performed prior to and separate from operational instruction.

C. Engineer's Responsibility

The Engineer will review with reasonable promptness all submittals with respect to the Project Documents and will indicate: Approved; Approved as Noted - No Resubmittal Required; Revise and Resubmit; or Rejected. The Engineer will return all submittals found incomplete stamped Rejected without a review.

1.12 DESIGN CALCULATIONS

Design calculations shall be presented in a neat, legible manner and shall bear the stamp and signature of a registered professional engineer, registered in the State of Virginia.

1.13 RECORD DRAWINGS

The Contractor will keep one copy of all Specifications, Drawings, Addenda, Change Orders and approved submittals at the site, in good order and annotated to show all changes made during the construction process. These shall be available to the Engineer and the Department and shall be delivered to the Department in both hard copy and digital (PDF) format upon completion of the project. Record drawings shall be prepared in accordance with Appendix E – Record Drawings of the PFM.

PART 2 – PRODUCTS

Not Used

PART 3 – EXECUTION

Not Used

FORM A - EQUIPMENT REGISTRATION

EQUIPMENT NAME: NUMBER: LOCATION:

MANUFACTURER: TELEPHONE:

ADDRESS:

SALES REPRESENTATIVE: TELEPHONE:

MANUFACTURER'S MANUAL NUMBER:

NAME PLATE DATA: MOTOR DATA:

ADDITIONAL EQUIPMENT DATA: ADDITIONAL MOTOR DATA:

PROJECT NO: DRAWING NOS:

SPECIFICATION SECTION:

FORM B - PARTS LIST

NAME OF PART: MANUFACTURER: CAT. NO.:

LOCAL SUPPLIER:

FORM C- MAINTENANCE PROCEDURES SHEET

EQUIPMENT NAME: _____ CRAFT: _____

PLANT AREA: _____ LEVEL: _____ LOCATION: _____

MAINTENANCE DESCRIPTION: _____ FREQUENCY: _____

SAFETY PRECAUTIONS: _____

TOOLS, PARTS, MATERIALS TEST EQUIPMENT: _____

(Separate sheet shall be filled out for each preventive maintenance procedure recommended by manufacturer, for each piece of equipment.)

END OF SECTION

This page intentionally left blank.

SECTION 13010

CS-FVNR STATION CONTROL SYSTEMS INTEGRATOR

PART 1 - GENERAL

1.01 SUMMARY

A. These Constant Speed-Full Voltage Non Reversing (CS-FVNR) specifications are intended to be used for wastewater pump stations less than fifteen (15) horsepower in the City of Suffolk, Virginia.

B. This section includes the requirements for the Contractor to obtain the services of **one** Instrumentation and Controls Subcontractor who shall be responsible for the coordination and integration of the instrumentation and control systems. This Subcontractor shall be referred to as the Control Systems Integrator (CSI). The CSI shall have total responsibility for the detailed design, procurement, fabrication, configuration, testing, installation, start-up and implementation of the pump station instrumentation and control system including control panels, instrumentation and electrical motor control equipment as specified herein. Also included is the furnishing, installation and testing of the SCADA system. **Single source responsibility is required.**

C. The CSI shall furnish all instrumentation and controls specified unless otherwise noted.

D. It is the Contractor's and the CSI's responsibility to Perform all testing, startup and demonstration efforts. It is the Engineer of Record's (EOR) responsibility to Coordinate and Oversee the startup and demonstration. The City and its Consultants are only obligated to Witness these activities.

E. Although specification references are made herein, other specification Sections may be referenced from those Sections. It shall be the Contractor's and the CSI's responsibility to obtain and follow applicable specification Sections for this project.

1.02 ABBREVIATIONS

CSI	Control Systems Integrator
FAT	Factory Acceptance Test
OIT	Operator Interface Terminal
I&C	Instrumentation and Control
I/O	Input / Output
PLC	Programmable Logic Controller
PCP	Pump Control Panel
Pre-SAT	Preliminary Site Acceptance Test

SAT	Site Acceptance Test
SCADA	Supervisory Control and Data Acquisition

1.03 CSI REQUIREMENTS AND RESPONSIBILITIES

A. The intent of this section is to provide integration, installation and testing standards for the PLC based Pump Control Panel and SCADA equipment. The wastewater pumping station will utilize software, PLC's and networking equipment to build a station control and SCADA system used to annunciate alarms, collect and archive station data.

B. The CSI shall furnish equipment, materials, software and appurtenances in accordance with the requirements of the Project technical specifications and drawings.

C. The CSI shall coordinate with equipment manufacturers to obtain information and submittals from manufacturers as required for the CSI to execute the work that the CSI is responsible for.

D. The CSI will be responsible for providing, installing, configuration, testing and startup of the Pump Control Panel and components including the PLC, OIT, networking equipment, instrumentation and SCADA System. The configuration programming will be the responsibility of the CSI to configure the PLC and OIT, to verify successful two-way data communication over the local network between the PLC and OIT.

E. The licensed programming software required for the configuration programming shall be the property of the CSI and shall be compatible with the City's current programming software standards and firmware version. The City's current PLC programming software is Allen Bradley, RSLogix 5000, and OIT programming software is FactoryTalk View ME. Contact the Department for the current required versions of these software packages.

F. Once installation and configuration programming is complete, the City of Suffolk designated Instrumentation and Control (I&C) Consultant will be responsible for programming the operation control logic in the PLC and the graphics in the OIT. Operational programming is limited to the station specific logic and graphics programming for the PLC and OIT. This programming will be done as an addition to the basic configuration files provided by the CSI.

G. Operational functions and programming detailed in this and other sections are for informational purposes only to provide a comprehensive picture of the nature and extent of the Pump Control and SCADA System.

H. Provide enclosures for the PCP and other panels as required by the Project Documents. Equip the enclosure with all components as shown on the Project Drawings.

I. Provide sufficient communication and configuration ports for the following purposes, as required to provide the specific functionality:

1. Ethernet Port for connection to the Ethernet I/O Current Module.
2. Ethernet Port for programming and configuration to the PLC and/or I/O devices as applicable.
3. Ethernet port for connection of the Human Machine Interface.

J. Provide the PCP with minimum of one additional spare Ethernet communications port.

K. Configure and connect field devices to the I/O points as described in Section 13344 Input/Outputs Points List and as shown on the drawings. Where I/O points are not used, label as spare and shall be wired to terminal blocks and as shown of the drawings.

L. Provide Operator Interface Terminal to graphically show levels, pressures, alarm, equipment status, and setpoints. The CSI shall demonstrate communications of the OIT to the PLC's. Graphical programming of the OIT displays shall be completed by the City's I&C Consultant.

1.04 QUALITY ASSURANCE

A. References

1. Materials and installation shall be in accordance with the latest revisions of the following codes, standards and specifications, except where more stringent requirements have been specified herein:

ANSI - American National Standards Institute
ASME - The American Society of Mechanical Engineers
ASTM - The American Society for Testing Materials
NEMA - National Electric Manufacturers Association
UL - Underwriters Laboratories, Inc.
ISA - Instrument Society of America
IEEE - Institute of Electrical and Electronic Engineers
NEC - National Electrical Code

B. Quality Control

1. All components shall be new and of the most current and proven design. All components shall be suitable for the intended application and shall be installed and wired in strict accordance with the manufacturer's requirements.

2. Control panels and their components shall be UL listed and labeled. UL Listing for Pump Control Panel (PCP) shall be UL-698A, for control panels with intrinsically safe circuits extending into hazardous areas. All control panels not having intrinsically safe circuits extending into hazardous areas shall be UL 508A Listed and labeled.

3. CSI

a. The CSI shall be regularly engaged in the business of instrumentation and controls and shall be responsible for the furnishing, coordination and the installation of the equipment and specified herein.

b. The CSI shall demonstrate the requisite resources of in-house staff, facilities and finances to complete the project in the schedule specified. These resources shall include personnel who are direct payroll employees of the CSI to engineer, design, implement, fabricate, stage, and test the entire integrated hardware and software system at the CSI's facilities. In-house personnel shall include all disciplines associated with system manufacture, fabrication, and integration to include but not be limited to engineering, drafting, analog and digital control systems and wiring design, construction, wiring, labeling, software configuration, programming, project management, quality control, and field engineering.

c. The CSI shall assign a specific person to be the CSI Project Manager for this project. The Project Manager shall be a direct employee of the CSI, shall be assigned to this specific project, and shall be skilled and experienced in project management, and in the type of work described herein. The Project Manager shall be assigned for the period of the Project. Should it become necessary to replace the CSI's project manager, the Contractor shall submit to the Department the credentials of the person assigned as their replacement.

d. The CSI shall maintain a UL listed fabrication shop located at the CSI facility for the assembly of the various control panels, cabinets, consoles, instrument racks, enclosures, and wiring

required for this project. This shop shall be available for inspection by the Engineer to observe quality control and workmanship. The CSI facilities shall include hardware and software owned by the CSI Subcontractor for development and support of any system software, and any testing and demonstration equipment to be utilized on the project.

e. Alternatively, UL Listing requirement may be done by an Underwriters Laboratory (UL) field representative in accordance with UL's Field Listing program.

1.05 SUBMITTALS

A. Submittals shall be in accordance with the provisions set forth in Section 01300 and Chapter 4.6 of the PFM.

B. Unless the CSI has been previously approved by the Department, submit a CSI qualifications package for the proposed CSI for this project. The qualifications package shall include the following information: Company Background, Experience in Municipal Wastewater Pumping Station Applications, Project Plan for this Project, Information of the CSI's Facilities and Fabrication Shop, Three Letters of Reference summarizing the CSI's performance on similar projects.

C. Prior to obtaining any material, fabrication, or installation in connection with this Section, detailed shop drawings on all material shall be submitted and approved. Submittal requirements for equipment are listed in individual equipment specification sections referenced in this specification section. Requirements listed in this specification section are in addition to requirements listed in other specification sections.

D. If deviations are proposed, the CSI shall follow the procedures listed in Section 4.6 of the PFM. Should the Department elect to not accept a proposed deviation, the Contractor shall be obligated to provide the original design specified.

E. Drawings

1. Coordination Drawings

a. Submit coordination drawings for review and approval by the Engineer/Department.

b. Coordination drawings shall be prepared by the CSI and shall include the following, as a minimum:

1) Interconnection wiring diagrams showing control panel and field wiring to components and panels provided by other

manufacturers. Indication of field wiring to components shall include terminations in intermediate terminal boxes, field devices and instrumentation, control panels and equipment. Diagrams shall include terminal numbers for terminations to equipment.

2) Control panel wiring diagrams for equipment control panels furnished or modified by the CSI

3) Scaled control panel elevations, panel layouts, equipment mounting racks.

4) Drawings shall be prepared by the CSI and shall be developed on a computer aided drafting (CAD) system. The CAD system shall be AutoCAD, latest version as approved by the Department. Drawings shall be printed on 24" high x 36" wide reproducibles. One set of reproducible drawings shall be submitted with the required number of sets of prints. Reproducibles and prints shall be full size 24" x 36".

5) Coordination drawings shall include wiring interconnections, terminations and terminal numbers for connections between equipment and devices and panels provided by the CSI.

2. Record Drawings shall be in accordance with the provisions set forth in Section 01300, CS-FVNR Station Submittals.

F. Operations & Maintenance Manuals shall be in accordance with the provisions set forth in Section 01300, CS-FVNR Station Submittals.

1. The CSI shall provide three operations and maintenance manual incorporating all the requirements as specified in each of the following individual equipment specifications:

a. Section 13341 CS-FVNR Station Control System Hardware
b. Section 13347 CS-FVNR Station Control System Description
c. Section 13400 CS-FVNR Station SCADA System
d. Section 13420 CS-FVNR Station Instrumentation

2. The final approved Operations and Maintenance Manual shall also be provided on compact disk (CD).

G. Testing, Startup and Demonstration Plan

1. The CSI shall develop a testing and demonstration plan for the equipment, controls and instrumentation that are furnished by the CSI. The plan shall consist of two main components, 1) testing and 2) start-up/demonstration. Both the testing and startup/demonstration shall include factory and site

testing of component devices and pieces of equipment individually and as integrated systems. The plan shall be incorporated into the testing and startup/demonstration plan to be submitted by the Contractor.

2. The CSI shall utilize the Factory Acceptance Test (FAT) Check List (Appendix B-8 of the PFM) as guide to the minimum requirements for conducting the FAT. Notify the Engineer of Record and the City a minimum of 14 calendar days in advance to schedule the FAT. The FAT is a witnessed event.

3. The CSI shall utilize the Pre-Site Acceptance Test (Pre-SAT) Check List (Appendix B-9A of the PFM) as guide to the requirements for conducting the Pre-SAT. The Pre-SAT Check List is used to show field test results verifying that all wiring and connected components conform to plans and specifications. Notify the Engineer of Record and the City a minimum of 14 calendar days in advance to schedule the SAT. The Pre-SAT is not a witnessed event.

4. The CSI shall utilize the Site Acceptance Test (SAT) Check List (Appendix B-9B of the PFM) as guide to the minimum requirements for conducting the SAT. The SAT Check List is used to show field test results verifying that all systems conform to plans and specifications. Notify the Engineer of Record and the City a minimum of 14 calendar days in advance to schedule the SAT.

5. CLOSEOUT SUBMITTALS – The following items shall be submitted to the Owner for approval prior to the Start-Up and Demonstration Test:

   a. Certified FAT, Pre-SAT, and SAT reports
   b. O&M Manuals
   c. As-Built Drawings

6. Start-Up and Demonstration Plan of the components, equipment and systems shall include details of staff to be used, testing equipment to be used, listing of equipment and systems to be tested, and a detailed description for testing. Testing shall include final testing of calibrated ranges and actuation settings of instrumentation and field devices, testing of panel mounted controls and control stations, and testing of interlocks, status indication and alarms between panels and systems.

7. For the purposes of preparing the Start-Up and Demonstration Plan, the CSI shall assume that a minimum of six persons employed by the Owner will be witnessing the tests. The Contractor shall notify the Owner in writing a minimum of fourteen (14) calendar days prior to performing startup and demonstration of operation of the equipment and systems.

8. The CSI shall have a representative available on site during the Start-Up and Demonstration. The CSI's representative shall participate in the testing and demonstration of the facility, including testing of individual pumps, testing of multiple operations of pumps, and failure testing and demonstration.

H. Sequence of Construction

1. The CSI shall develop and submit a sequence of construction to include installation of the Pump Control Panel and the level transducer. The sequence of construction shall be integrated with the overall sequence of construction to be developed and submitted by the Contractor.

PART 2 - PRODUCTS

NOT USED

PART 3 - EXECUTION

3.01 CSI COORDINATION AND MEETING REQUIREMENTS

A. General

1. The CSI shall perform the detailed integration and coordination of the control systems and instrumentation equipment furnished in accordance with this specification. Work shall be performed by the CSI's own staff and related equipment manufacturer's engineers where applicable, including submittal drawings, operations and maintenance manuals, as-built shop drawings, equipment testing, operational demonstrations, and other applicable documentation.

2. Coordination with other equipment manufacturers: The CSI shall be responsible for coordinating with the other equipment manufacturer's in order to obtain submittals to be used for coordination of wiring interface. The CSI shall review and coordinate with the equipment manufacturer's submittals.

3. Initial Coordination Meeting

The CSI shall be responsible for scheduling and holding an initial coordination meeting with the Contractor, and Department to review the scope of the project, and the project schedule. The meeting shall be attended by the CSI project manager, and all other parties that are involved in the integration of the control system. The Contractor shall provide written notice of the meeting date at least fourteen (14) calendar

days prior to the requested date, and shall have submitted the testing and demonstration plan prior to the meeting date.

3.02 TESTING REQUIREMENTS

A. Correct manufacture of the pump control system is critical to the successful and timely turn-over of facilities to the Department. These Specifications require a Preliminary Factory Acceptance Test (Pre-FAT), Factory Acceptance Test (FAT), a Preliminary Site Acceptance Test (Pre-SAT), and a Site Acceptance Test (SAT). Checklists for these tests are located in Appendix B of this PFM. Specific procedures, personnel required at the tests and Department Charges for certain failed tests are included in Appendix B-12 Pump station Acceptance Procedures, of the PFM.

B. Factory Acceptance Testing (FAT)

1. The CSI shall submit for review a detailed FAT Procedure document including the FAT Check List detailing the procedures, methodology and equipment required to be used for the FAT.

2. The CSI shall perform a complete inspection of the PCP and Motor Control Panel components, wiring and devices to verify compliance with as-built drawings and documentation.

3. The CSI shall develop a configuration program for the PLC and OIT to communicate and display data transferred between the PLC and OIT. Demonstration shall show transmission of data from the PLC input to the OIT screen and activation of PLC outputs from the OIT screen displays.

4. The CSI shall perform an unwitnessed Pre-FAT utilizing the FAT Checklist.

5. Once the PLC and OIT configuration programs have been developed and installed and a successful Pre-FAT has been performed, the Contractor shall forward copies of the PLC and OIT configuration programs and the completed Pre-FAT Checklist to the EOR and the City's I&C Consultant. The Contractor shall then schedule the FAT with the Engineer of Record (EOR). The Contractor shall give at least a two week (14 calendar days) advance notice of the proposed date of the FAT to coordinate schedules of required personnel.

6. Prior to the scheduled date of the FAT, the City's I&C Consultant shall provide the CSI with the operation logic programs for the PLC and OIT. The CSI shall install the PLC and OIT operation programs prior to the FAT.

7. The FAT shall be performed by the CSI in witness of the Department and/or the City's I&C Consultant. The FAT Check List, upon successful conclusion of the FAT, shall be signed by both the CSI and the witness.

8. The FAT shall include the complete setup of the Pump Control Panel including the PLC, OIT, network equipment and the Motor Control Panels. The FAT shall demonstrate successful transmission of two-way data between the PLC, OIT, and Ethernet I/O adapters, and demonstration of hardwired control and signals between the Pump Control and Motor Control Panels

9. The FAT is a "Pass/Fail" test. Upon FAT failure, the witness may, at their discretion, declare that the FAT has failed and end the testing procedure. In the event of a FAT failure, the CSI shall correct all deficiencies and reschedule the FAT with the Department's I&C Consultant. This process shall be repeated until the FAT is considered successful by the Department.

10. The CSI shall provide the signed FAT Check List to the Department for approval prior to releasing the panels for shipment or installation.

C. Preliminary Site Acceptance Testing (Pre-SAT)

1. The CSI shall conduct a preliminary (unwitnessed) SAT using the Pre-SAT Check List. Only after the Pre-SAT checklist is reviewed and approved by the City will the SAT be allowed to be scheduled. The Contractor shall give at least a two week (14 calendar days) advance notice of the proposed date of the SAT to coordinate schedules of required personnel.

D. Site Acceptance Testing (SAT)

1. The CSI shall submit for review a detailed SAT Procedure document including the SAT Check List detailing the procedures, methodology and equipment required to be used for the SAT.

2. The SAT shall begin after receipt of approved shop drawings and installation of the system components at the site. These shall include:

   a. "As-built" drawings for the Pump Control Panel.

   b. "As-built" shop drawings for the Motor Control Panels

   c. Certified FAT results.

   d. Pump station power is connected and in operation.

e. All control wires are pulled, labeled, connected, tested, and verified.

f. Pump Control Panel and Motor Control Panels have been installed at the station and wiring terminations (control and power) are completed and verified.

g. All network cables are pulled, labeled, connected, and connections tested.

h. All network devices are installed, connected, and communications verified.

i. Telog Panel is installed, and wiring connection between the Telog Panel, Pump Control Panel, and field devices are installed and verified.

j. All pumps, instrumentation, and mechanical components are installed and operational.

k. Instruments are field calibrated and ranges verified.

l. Spare parts are available on-site or have been delivered to the Department.

3. The CSI shall perform a complete inspection of the PCP and SCADA System Panel components and wiring and devices to verify compliance with as-built drawings and documentation.

4. The CSI shall perform operational testing of the PCP and SCADA System by verifying components, wiring, configuration, and communications. Simulate all pump station control conditions, verify successful station control operations, and that data is detected by the PLC and displayed on the OIT.

5. The CSI shall actuate all field devices as practical or simulate signals at the furthest point possible from the PLC and SCADA System inputs. The Contractor shall be available to operate equipment and test status feedback as required.

6. The SAT shall be performed by the CSI in witness of the Department and/or the City's I&C Consultant. The Contractor shall schedule the SAT with the Engineer of Record (EOR). The SAT Check List, upon successful conclusion of the SAT, shall be signed by both the CSI and the witness.

7. The SAT is a "Pass/Fail" test. Upon SAT failure, the witness may, at their discretion, declare that the SAT has failed and end the testing procedure.

In the event of a SAT failure, the CSI shall correct all deficiencies and reschedule the SAT with the Department's I&C Consultant. This process shall be repeated until the SAT is considered successful by the Department.

3.03 PUMP STATION OPERATIONAL STATUS

CSI shall coordinate work with Contractor so work performed by different trades will not be in conflict.

3.04 INSTRUMENTATION

The CSI shall coordinate and supervise the installation of instrumentation equipment furnished by the CSI as specified. Instrumentation shall be installed in accordance with the requirements of Section 13420, CS-FVNR Station Instrumentation.

3.05 FIELD QUALITY CONTROL

A. Installation: The CSI shall provide on site supervision and advice to the installing contractor to insure the equipment is installed in accordance with the specifications and the manufacturer's requirements.

B. Inspections & Field Calibrations

1. Any and all testing equipment required for this project shall be owned by the CSI so as to be immediately available for this project.

2. Calibrate instrumentation and place each system into operation. The commissioning of each system shall include the overall calibration and tuning of all control loops and sequences to provide stable control of the process. The validity of all process inputs and outputs for each system shall be checked and corrected during the system commissioning. Final adjustment and calibration shall be performed for all equipment prior to initiation of final testing.

C. Field Demonstrations

1. Demonstrate the control features of each panel and associated field mounted instrumentation and control equipment, to verify that each panel performs the required control functions and logic as shown on the Project Drawings or as specified. Control features shall include relay energization, initiation of alarm conditions, resets, interlocks, set point activation, and other functions of the control panels.

2. Equipment shall be field demonstrated to operate satisfactorily in the presence of the Department, and shall be conducted in accordance with the

CSI's testing and demonstration plan that has been reviewed by the Engineer. Field demonstrations shall be performed after successful installation, calibration and testing of each control panel.

3. In addition to demonstrating the operation of standard control features, special control panel functions shall be demonstrated as specified for each panel.

4. The Contractor shall provide the necessary test equipment, process media, materials, supplies, and qualified test personnel to perform the field demonstrations as specified herein.

5. Field instrumentation control signals that are required to demonstrate the operation of associated control panels may be simulated upon approval of the Department.

6. In the event of failure of the field demonstration, the Contractor shall perform the necessary corrections and re-demonstrate, at the Contractor's own cost and expense, for the affected equipment as directed by the Department.

END OF SECTION

This page intentionally left blank.

SECTION 13341

CS-FVNR STATION CONTROL SYSTEM HARDWARE

PART 1 - GENERAL

1.01 ABBREVIATIONS

CSI	Control Systems Integrator
I/O	Input / Output
OIT	Operator Interface Terminal
PLC	Programmable Logic Controller
PCP	Pump Control Panel
UL	Underwriters Laboratory
UPS	Uninterruptible Power Supply
TVSS	Transient Voltage Surge Suppressor
SCADA	Supervisory Control and Data Acquisition

1.02 SCOPE

A. The CSI shall be capable of performing the fabrication, installation, calibration, configuration, programming and other functions that are required for and incidental to providing the pump station control system. The CSI shall provide all labor, tools, equipment and software as required to perform the functions as specified.

B. These Constant Speed-Full Voltage Non Reversing (CS-FVNR) specifications are intended to be used for wastewater pump stations less than fifteen (15) horsepower in the City of Suffolk, Virginia.

C. The requirements of this section include all labor, materials, equipment and services necessary for and incidental to the complete and satisfactory installation of the Pump Control Panel (PCP), and associated equipment that will make up the primary element of the pump station control and monitoring system. Automatic control and monitoring of the pump station operation and equipment as well as interfacing with the City's SCADA System shall be accomplished using hard wired I/O connected to the SCADA System.

D. The control system shall consist primarily of a PLC with logic based software, I/O cards for field and control wiring interface and an OIT for operator interface and monitoring. The PLC shall be used for processing I/O for monitoring and control of the station as well as repeating I/O for transmission to the City's SCADA System. The control system shall provide alarm annunciation, mechanical and electrical equipment and systems monitoring, data collection and trending, and

monitoring of the station functions to the SCADA System.

E. The CSI shall be responsible for the furnishing of the specified components of the control system, including the PLC, OIT and components for the pump control panel (PCP), specified herein, and the configuration programming of the PLC and OIT. Operational programming of the PLC and OIT shall be the responsibility of the Department's designated representative.

1.03 QUALITY ASSURANCE

A. Qualifications of Manufacturer:

1. All equipment furnished under this Section shall be furnished by manufacturers who meet the quality, workmanship, and experience requirements as specified in the General Provisions section of this Project and Section.

2. To the extent possible, all PLC and OIT equipment and software specified under this section shall be furnished by a single manufacturer who shall have at least five years experience in the design, production, assembly, and field service of equipment of like size and type.

3. Materials and installation shall be in accordance with the latest revision of the following:

   a. Underwriters Laboratories (UL)
   b. National Electrical Manufacturer's Association (NEMA)
   c. Institute of Electrical and Electronics Engineers (IEEE)
   d. National Electric Code (NEC)
   e. International Society of Automation (ISA)

1.04 SUBMITTALS

A. Submittals shall be in accordance with the provisions set forth in Section 01300 and Chapter 4.6 of the PFM.

B. Provide manufacturers descriptive information on all equipment and components provided. Equipment literature shall indicate operational ranges, ratings, certifications, limitations, installation recommendations and warrantees.

C. Provide scaled detail drawings for each control panel fabricated for this project. Drawings shall be complete with a Bill of Materials (quantity, description, manufacturer and part number), electrical circuit diagrams, and I/O diagrams showing terminals, wire numbers and configuration of field devices.

D. Provide scaled drawings showing mounting details, locations, interconnections and other information pertaining to field installation.

E. Submittals shall include the following for the PCP:

1. Interconnection diagrams including terminal identification for all field connected devices.

2. Symbol list and legend for all symbols used in the submittal.

3. Power requirements and connection information for all components requiring external power.

4. Interconnection cable for external connections (e.g. shielded No. 16-2 AWG).

5. Identification of all conductors to be terminated in the field.

6. Identification numbers for all spare conductors, input/output modules, and terminals.

7. Submittals shall include a system schematic diagram showing all equipment/modules, devices, power connections and data links for the complete system. Diagrams shall include device identification, terminal numbers and communication port identifiers, cable and cable connectors.

8. Submit a complete spare parts list for equipment specified to be furnished under this Project and a manufacturer's recommended spare parts list.

9. Submittals for PLC hardware and components, and OIT hardware and components shall include catalog data, installation and maintenance instructions, and detailed schematics on cabling and wiring connections.

10. Elevation views of interior panel layouts, including equipment, wiring and terminals.

F. Provide catalog data for the following:

1. Equipment dimensions, including shipping splits, stub-up locations and shipping weights.
2. All major components.
3. PLC system
4. OIT

5. Digital Displays
6. Pilot lights and switches
7. Surge protection devices
8. TVSS
9. UPS
10. Wiring Diagrams.

G. Each submittal shall be provided with a detailed list. Any deviations from the specifications and Project Drawings shall be addressed in strict conformance with the provisions set forth in Section 01300 and Chapter 4.6 of the PFM.

H. Each data sheet shall be marked with the tag number for the device and the data sheet shall be marked with the part number or model number of the specific item to be provided under this project. Data sheets not marked as provided above may be cause for rejection of the shop drawing submittal.

I. Operations and maintenance manuals shall be in accordance with Section 01300 CS-FVNR Station Submittals and as specified herein.

1. O&M manuals shall include the following information as a minimum:
2. System Specifications
3. Electrical Power Requirements
4. Assembly and Installation Procedures
5. Power-up Procedures
6. Troubleshooting Procedures
7. Explanation of internal fault diagnostics
8. Shut-down Procedures
9. Recommended Spare Parts List
10. Description of operation for OIT and workstation functions
11. Manufacturer's troubleshooting guide and instructions for PLC and OIT hardware

1.05 WARRANTY

A. The warranty shall provide (a) a minimum of next-day, on-site service for emergency failures, and (b) replacement of the defective component within one week, if repairs cannot be affected within that time. A five calendar day response time, on-site service, is required for non-critical failures. Work under the warranty shall be provided by the CSI responsible for the system installation. This warranty shall cover a period of one year from the date of final acceptance of the project unless otherwise specified. The Department shall be the sole determiner of the severity of a failure and whether the failure is an emergency or non-critical failure.

PART 2 - PRODUCTS

2.01 ELECTRICAL

A. Wires within control panel: All wiring shall be made in horizontal and vertical runs, and groups of wires to and from common points shall be made in PVC wire ducts and adequately supported. Analog and discrete signal wiring shall be in separate wire ducts, or if required to be in the same duct they shall be separated with vertical dividers.

1. Panel Wiring:

a. Type MTW or TFFN color coded stranded copper.

1) AC Power = Black
2) AC Control = Red
3) Neutral = White
4) Ground = Green
5) DC Control Circuits = Blue
6) DC +24 V Supply = Yellow
7) DC 24 V Supply Common = Brown
8) DC +12 V Supply = Red/yellow stripe
9) DC 12 V Supply Common = Brown
10) Rated for 600 Volts, 105 degrees C. Sized for current to be carried, but not less than No. 16 AWG.
11) Twisted-Shielded Pair (TSP) = Gray or black. Wire size minimum is 18 AWG.
12) Ethernet wiring shall be CAT-5E Shielded

2. Special Signal Circuits:

a. Manufacturer's standard cables or recommend cables.

3. Wire Identification:

a. Wire IDs shall be numbered and tagged at each end of termination.

b. Tags shall be legible with machine printed markings and numbers. Numbers shall be arranged and sized for easy identification without removing wire from terminal strip. Each wire shall be marked with unique numbers, identical on both ends.

c. Tags shall be on heat shrinkable irradiated polyolefin that will not

smudge or fade when printed. Adhesive or taped on tags are not acceptable. Handwritten markings will not be allowed.

d. Labels shall be produced using Brady TLS 2200 Thermal Labeling System.

2.02 CONTROL PANEL TERMINAL BLOCKS

A. Terminal blocks shall be provided for all external connections, plus a sufficient number of spares to provide no less than twenty percent (20%) extra terminals. Each used, unused and/or spare input and output of the PLC control system shall be terminated to a terminal block.

1. No more than two wires shall be connected to any one terminal block.

2. Splices shall not be permitted in control panels; all wiring shall be terminated at a terminal.

3. Electrical power, control and alarm wiring shall be terminated in terminal block assemblies separate from blocks used for analog signal wiring.

4. All terminals shall be TS 32 DIN rail mountable. End plates shall be provided to isolate different signal types. Interconnections between terminals shall be made with a screw type fixed bridge. Each group of terminal blocks shall be secured with an end clamp.

5. Marking System: Mark terminal block and terminal strip numbers as shown on the panel control diagrams and loop drawings. Terminal markings shall be black numbers/letters permanently engraved on white background. Handwritten markings will not be allowed.

6. DIN Rail shall be 35 mm x 7.5mm standard aluminum DIN rail.

7. General Purpose Terminal Blocks:

   a. Rated Voltage: 600 Volts.
   b. Rated Current: 30 Amps.
   c. Wire Sizes: #26 to #10 AWG.
   d. Width: 0.25-inch
   e. Color: Gray
   f. Manufacturer: Weidmuller ZDU (Single) or (double).

8. Ground Terminal Blocks:

   a. Wire Sizes: #26 to #10 AWG.
   b. Width: 0.25-inch
   c. Color: Green & Yellow
   d. Manufacturer: Weidmuller ZDU.

9. Fused Terminal Blocks:

   a. Rated Voltage: 600 Volts
   b. Rated Amperage: 25 Amps
   c. Wire Sizes: #26 to 8 AWG
   d. Width: 0.4 inch
   e. Color: Black
   f. Indicator: LED
   g. Manufacturer: Weidmuller, WSI 6.
   h. Provide fuse blocks as required to protect circuits, power supplies, etc as shown on Project drawings and for each individual PLC analog input loop.

10. Grounding:

   a. Copper grounding lug for signal and shield ground connections shall be provided.
   b. Ground the ground bus at a common signal ground point in accordance with National Electrical Code requirements.
   c. Ground terminal block rails to ground bus.
   d. Provide grounding for each analog loop:

      1) DC power supply common.
      2) Group and connect shields at PLC Panel and tie to common panel ground.

2.03 PUSH BUTTONS, SELECTOR SWITCHES, AND PILOT LIGHT UNITS

A. The CSI shall furnish and install all controls required to be installed in control panels and enclosures required to be furnished by the CSI. Controls provided for installation in control panels and enclosures specified to be provided by manufacturers and suppliers other than the CSI are not required to be furnished by the CSI.

B. Push buttons, selector switches, and pilot light units shall be 30.5 mm NEMA/UL Type 4/13 rated devices as manufactured by Allen-Bradley, Bulletin 800T, no substitutions.

C. Provide sufficient contact blocks on devices in arrangements shown on the Project Drawings such that all required functions are provided. No more than two wires shall be terminated on each terminal.

D. Controls shall operate on 120 VAC power.

E. Pilot light units shall be LED type and be wired for "push-to-test" operation. Pilot light units shall be 120 volt transformer type. Pilot light units shall be provided with interchangeable color caps.

2.04 POWER SUPPLIES

A. Power supplies for installation in the control panels shall be provided as required for powering of instruments that require external DC power, including PLC's, Ethernet switch, transmitters and OIT.

B. Power supplies shall convert 120VAC, 60Hz power to 12 or 24VDC power of appropriate voltages with sufficient voltage regulation and ripple control to assure that instruments being supplied are operating within their required tolerance.

C. Output over voltage and over current protective devices shall be inherent in power supplies to protect instruments from damage due to power supply failure and to protect the power supply from damage due to external failure.

D. Performance Specifications:

1. Input Voltage: 104-127VAC.
2. Input Frequency Range: 47-63Hz.
3. Harmonic Ripple Affect: 0.1% peak to peak.
4. Polarity may be used positive or negative.
5. Short Circuit Protection: Automatic circuit protects the power supply if the output is shorted continuously. There shall be automatic return upon removal of a short circuit.
6. Operating Ambient Temperature: 0-50 degrees C.
7. Recovery Time: Less than 20 microseconds, one-half load to full load.
8. Output Voltage Adjustment: ±5% minimum.
9. Power supply mounting should be in such a way that the dissipated heat does not affect other components within the panel layout.
10. All DC loads within the panel shall be fused.
11. Manufacturer: IDEC, OMRON.
12. Power calculations shall be provided for load requirements. Power supply shall be rated for 150% of load as a minimum.
13. Power supply shall be UL-508 Listed.

2.05 SURGE/TRANSIENT PROTECTION (LINE SURGE PROTECTION)

A. Transient Voltage Surge suppression (TVSS) shall be provided to protect the components of the control panels against damage due to electrical transients induced by lightning and nearby electrical systems.

B. Provide TVSS for 120 VAC control power circuits in PCP. All incoming AC sources shall be protected by the Cutler Hammer AEGIS-HW style surge protector.

2.06 SURGE/TRANSIENT PROTECTION (CURRENT LOOP SURGE PROTECTION)

A. All analog wiring from field mounted transmitters, receivers, and related devices shall be protected by a MTL, Inc. model SD32. The surge protection shall be mounted within the control panel and they shall protect the PLC I/O cards and related equipment from damage.

B. Performance Specifications:

1. Supply Voltage, Line to Line: 32V typical.
2. Supply Voltage Line to Ground: 28V maximum.
3. Minimum Life: >1000 operations with 200A, 10x1000 microseconds.
4. Operating Temperature Range: -40 to +80 degrees C.
5. Manufacturer and Type: MTL, Inc., SD32.

C. All analog field mounted transmitters shall be protected by a Bourns Model 1669-06. These surge protectors shall be mounted at the field equipment to protect the transmitter from damage.

D. Performance Specifications:

1. Supply Voltage, Line to Line: 30V maximum.
2. Supply Voltage Line to Ground: 28V maximum.
3. Resistance Added to Loop: 44 ohms maximum.
4. DC Clamping Level, Line to Ground: 36V-±10%.
5. Operating Temperature Range: -40 to +100 degrees C.
6. Impulse Clamping Level, Line to Line: 50V maximum.
7. Impulse Clamping Level, Line to Ground: 70V maximum.
8. Surge Life: 20 kA 8/20 microseconds, 20 times.
9. Surge Life: 1kA; 10/1000 microseconds, 1000 times
10. Housing: ¾” pipe nipple with ¾-14 NPT on one end.
11. Manufacturer and Type: Bourns, Model 1669-06.

E. Provide surge protective devices in PCP for all analog circuits entering and leaving the panels from an instrument or a 4-20 mA producing device.

2.07 UNINTERRUPTIBLE POWER SUPPLY (UPS)

A. UPS-EATON EX as manufactured by EATON sized to provide a minimum of 2 hours of backup power for PCP control panel and equipment while station is under backup power operating conditions. UPS shall be provided with a by-pass switch.

2.08 ISOLATORS

A. Provide signal isolators in control panels for 4-20 mA loops where required to prevent ground loop or circuit load problems, and as indicated on the Instrumentation drawings.

B. Isolators shall have an input power of 24VDC and be DIN rail mount. Where circuit loading exceeds the maximum allowable resistance for the circuit, provide 4 wire type isolators with 120 VAC input.

C. Accuracy shall be ±0.10% over ambient temperature range of 0-50 degrees C.

D. Isolators shall allow for field adjustments of input signal offset and span.

1. Isolators shall be AGM Series 4000, or as required for circuit loading.

2.09 CONTROL PANEL ENCLOSURE FOR PCP

A. Provide enclosure as indicated on the Instrumentation drawings. Enclosure for PCP shall be, NEMA 12.

B. NEMA 12 enclosure for interior installation shall have the following features:

1. 12 gauge steel construction.
2. Smooth continuously welded seams.
3. Heavy gauge continuous piano hinge.
4. Oil resistant door gasket.
5. 3-point latching and key locking handle, spring roller type
6. Finish shall be manufacturer's standard.
7. Document pocket mounted on the interior of door.
8. Subpanel constructed of 14 gauge steel, minimum, with white enamel paint finish, intermediate stiffeners and Type 316L stainless steel hardware.
9. Exterior shall be two coats of ANSI 61 Gray 1-part epoxy by Sherwin

Williams.

10. Panel shall be UL listed.

C. Modifications to the enclosure shall maintain the NEMA Type 12 rating of the enclosure.

D. Enclosure shall be as manufactured by Hoffman Engineering.

2.10 MISCELLANEOUS PANEL EQUIPMENT

A. Service Lights:

1. Internal panel service lights shall be provided and shall operate on 120 VAC power.

2. Light shall be top mounted fluorescent with manual switch.

3. Light shall be mounted internally at the top front of the enclosure.

4. Light shall be Hoffman fluorescent fixture ALD25D18R with F15T8 bulb.

B. Service Outlets:

1. Provide 120V, 15A DIN rail mounted convenience duplex receptacle inside the enclosure.

2. Receptacle shall be Phoenix Contact EM-DOU.

C. Elapsed Time Meters:

1. Elapsed time meters shall be non-resetting 2.5-inch Big Look Yokogawa Model 240211AAAB.

D. Identification Nameplates and Legend Plates:

1. Nameplates shall be machine engraved ¼-inch high (1 inch high for enclosure title) black capital letters on a 1/8-inch thick plastic black tag with white letters mechanically attached to the enclosure. Nameplates shall not be engraved by hand. Provide nameplates as indicated on the Instrumentation drawings.

2. Legend plates shall be metal with black lettering mechanically attached to the control panel.

3. Provide nameplates for equipment and components mounted on the interior of the panel. Nameplates shall be mounted adjacent to, but not on the equipment. Nameplates shall not be hand written.

2.11 INTRINSICALLY SAFE BARRIER - LEVEL TRANSMITTERS

A. Provide Intrinsically Safe Barrier for connection to level transmitter circuit as indicated on the Instrumentation Drawings. Barrier shall be compatible with the level transmitters specified in Section 13420 CS-FVNR Station Instrumentation.

B. Intrinsically safe barrier for analog circuits such as the level transmitter circuit shall be snap-on type, suitable for DIN rail mounting and grounding. Relays shall be suitable for use with intrinsically safe circuits installed in Class I, Division 1, Group D Hazardous Locations, and shall be FM, UL and CSA approved for use in such circuits. Barrier shall loop powered for energizing the two-wire, 4-20 mA level transmitter located in the hazardous area and connected loads. Barriers shall be approved by the manufacturer of the pressure transmitter for interfacing with the specific transmitter supplied.

C. Barriers shall be provided in the analog circuit to provide an intrinsically safe circuit suitable for installation in a Class I, Division 1, Group D Hazardous Location.

D. Install barriers in accordance with UL-698A and NEC Article 504.

E. Intrinsically Safe Barriers shall be as manufactured by RSTAHL, Model 9002.

2.12 INTRINSICALLY SAFE ISOLATORS – FLOAT SWITCH

A. Provide intrinsically safe isolators in the control panel for interfacing with the float switch circuits as indicated on the Instrumentation drawings. Intrinsically safe isolators used with dry contact inputs shall be provided with an energy barrier limiting the available voltage and current for the circuit installed within the confines of the Hazardous Location. The isolators shall interface with field equipment installed in Hazardous Locations that are not provided with explosion-proof enclosures, such as float switches. Isolators shall be suitable for intrinsically safe circuits installed in Class I, Division 1, Group D, Hazardous Locations, and shall be approved by Factory Mutual and Canadian Standards Association for installation in such locations.

B. Isolators shall be solid state design, and shall be suitable for operation on 24 VDC power, provided with two, double throw contacts rated at 2.0 amperes at 120 VAC.

C. Install barriers in accordance with UL-698A and NEC Article 504.

D. Isolators shall be MTL, Inc. Model 5514 series.

2.13 CONTROL AND TIMING RELAYS

A. The CSI shall furnish and install all controls required to be installed in control panels and enclosures required to be furnished by the CSI. Controls provided for installation in control panels and enclosures specified to be provided by manufacturers and suppliers other than the CSI do are not required to be furnished by the CSI.

B. Provide relays with sufficient poles such that all required functions are provided. No more than two wires shall be terminated on each terminal of the relay socket.

C. Contact ratings shall be minimum 10 amperes at 24 VDC or 240 VAC. Contact material shall be silver cadmium oxide. Relays shall be provided with LED indicator to illuminate when the coil is energized. Timing relays shall be solid state with external adjustable time settings within adjustable time ranges. Timing relay shall have four selectable modes: On-delay, off-delay, one-shot and repeat cycle with adjustable on and off time periods.

D. Provide relays with 120 VAC or 24 VDC powered coils as required to meet functions indicated in Project Drawings. The 120 VAC coil relays shall be blade type plugs and the 24 VDC relay coils shall have pin type plugs. Relays shall be UL recognized devices as manufactured by IDEC, RH series.

2.14 OPERATOR INTERFACE TERMINAL (OIT)

A. An operator interface terminal shall be provided to communicate locally with the PLC, allow changing of control and alarm set points, display equipment status, annunciate alarms, change control modes, and other interfacing required for the monitoring and control of the pump station. The OIT shall be provided with the following:

1. A 10" (10.5 diagonal display) touch activated TFT (active display) with 640W x 480H minimum color display resolution

2. Mounted on the control panel with no more than 4.5" depth and shall operate from 18 to 32 VDC, or 24 VDC nominal.

3. OIT shall have NEMA 12 rating

4. The unit shall include all cables, interfaces, and associated hardware and

software to allow two way communications with the PLC.

a. OIT shall be compatible with and support PLC using EtherNet communications.

b. The OIT software for developing graphic display screens and data display screens shall be the manufacturer's standard package.

c. Operator Interface Terminal's display screens shall be as specified in Section 13347 CS-FVNR Control System Description.

d. OIT shall be PanelView Compact 2711PC-T10C4D8 as manufactured by Rockwell Allen Bradley no substitutions.

2.15 PROGRAMMABLE LOGIC CONTROLLER (PLC) SYSTEM

A. General:

1. The PLC processor and related equipment shall be the product of one manufacturer and components shall be completely compatible.

2. The processor shall have downward capability, whereby all new module designs are capable of being interchanged with similar modules to reduce obsolescence.

3. The PLC processor shall be designed and tested to operate in industrial, high electrical noise environments. The system shall be provided with RFI protected shields and barriers to prevent interference with other electrical systems.

B. PLC Processor:

1. The PLCs shall be microprocessor-based, stand alone device. It shall be designed for industrial environments, capable of a mix of relay logic, timing, counting, computation, and shall include a library of preprogrammed subroutines. The PLC processors shall include a time of day real-time clock and calendar.

2. The PLC processor memory shall be nonvolatile (flash) memory.

3. The PLC processor shall be provided with 1784 CompactFlash Card to back up processor memory. The CompactFlash Card module shall provide a minimum of 64 MB storage space to back up user program and tag data.

4. The PLC processor shall be capable of interfacing with the type of input/output (I/O) modules shown on the Project Drawings and specified herein. The PLC processor shall be capable of communicating with up to 16 1769 I/O modules.

5. The unit shall be provided with a key selector switch with Run/Remote/Program operating modes.

6. The PLC shall have relay logic with contacts, a mix of timers, counters, algebraic equations and manipulations consisting of addition, subtraction, multiplication, division, automatic scaling and un-scaling routines, and BCD conversion routines.

    a. Logic Control: The processor shall perform the same functions as a conventional logic system including relays, on delay timers, off delay timers, counters, and drum sequencers.

    b. Compare Function: The processor shall perform the compare functions that compare two integers or floating point numbers for less than, equal to, greater than, and not equal to. The programmed function shall energize a relay when true and de-energize it when false.

    c. Move Function: The move function shall move an integer or floating point value from one memory location to another memory location when an internal permissive is enabled.

    d. Math Function: The processor shall perform addition, subtraction, multiplication, and division or signed integer floating point numbers.

    e. Square Root Function: The processor shall take the square root of a positive integer.

    f. Binary to BCD Function: The processor shall convert a positive binary number to a positive four-digit BCD coded number.

    g. PID Control: The processor shall perform proportional, integral and derivative control of a process with adjustable ranges for: Proportional Gain, Reset Time, and Derivative Time.

    h. PLC System Alarm (PLC Fault): The PLC processor shall monitor the internal operation of the PLC system for failures. If a failure is

detected, the system shall shut down, energize or de-energize a failure relay, and freeze all inputs and outputs in their last states until the error is cleared. As a minimum, the following failures shall cause the system to shut down: Memory Failure, Memory Parity Error, I/O Cycle Failure, Operating System Error, or Watchdog Timer Time-out. In the event of a PLC fault, the analog output shall become zero. The PLC shall only resume normal operation when the fault condition has been cleared.

7. The PLC shall be provided with the following features:

   a. The PLC processor shall be capable of retaining last state in the event of a power outage.

   b. The PLC processor shall be provided with the following communication ports as a minimum:

      1) EtherNet port – EtherNet/IP port 10/100 BASE-T

      2) RS-232 port – RS232 port fully isolated 38.4 Kbps max

   c. Peripheral devices such as programming panels or host computers shall be connected directly to the PLC processor through the RS232 communications port, the EtherNet port or through a 1761-NET-AIC module.

8. The PLCs shall be provided with a user memory of 750 KB and shall be of the following manufacturer:

   a. Rockwell Automation/Allen-Bradley CompactLogix, Ethernet, part number 1769-L32E, no substitutions.

9. As a minimum, the actual programming memory shall be sufficient to accommodate the quantity and type of I/O, including spare and future I/O, as indicated in Section 13344 CS-FVNR Input/Output Point List, and to execute the required functions described in Section 13347 CS-FVNR Control System Description.

C. Input/Output (I/O) Modules:

1. General:

   a. The input/output (I/O) modules shall be tongue-and-grove

backplane type and shall be compatible with the PLC processor I/O structure. Each module shall be provided with a removable wiring terminal block to connect panel wiring to the module.

b. The Instrumentation drawings do not necessarily indicate all required I/O modules, both quantity and type. Provide I/O modules of sufficient quantity and type to accommodate the I/O listed in Section 13344 CS-FVNR Input/Output Point List, including active, future and 25% spare I/O. The modules shall be UL-508 Listed

2. Discrete Input (DI) Modules:

a. Discrete input (DI) modules shall be 115 VAC, 16 point input modules suitable for use with 115 VAC, 60 Hz input devices such as selector switches, push buttons, and motor starter contacts. The modules shall have 1500 VAC Opto-electrical isolation, LED status indication, and input noise filtering.

3. Discrete Output (DO) Modules:

a. Discrete output modules shall be 115 VAC, 16 point output modules suitable for use with 115 VAC output devices such as motor starter coils and indicating lights. The module shall have an output rating of 12 amperes maximum and 2 amperes per output, and have 1500 VAC Opto-electrical isolation. The modules shall be configured to either assume last state or reset in the event of a module fault.

b. Each discrete output shall be provided with an interposing relay interface for active, future and spare points. Control relays for all active, future and spare points shall be connected and wired to field terminal strips.

4. Analog Input (AI) Modules:

a. Analog input (AI) modules shall convert 4 differential or single-ended analog signals to proportional sixteen-bit binary values. The modules shall accept 4-20 mA or 1-5 V DC signals from devices such as transmitters, converters and analyzers. The modules shall be suitable for either 2- or 4-wire systems. The input power for each signal shall be derived from a DC power supply external to the module. The accuracy of the module shall be +/- 0.2% of full scale at 25degrees C.

5. Analog Output (AO) modules:

   a. Analog output modules shall convert 14-bit binary values to 4 single-ended analog output signals. The modules shall output a 4-20 mA DC signal to devices such as variable frequency drives, modulating valves, and SCR heating. The analog output shall be capable of driving a 0-600 ohm load without adjustment. The system power shall be provided through the I/O backplane.

D. Power Supplies:

1. A power supply shall be provided to provide power to the PLC processor and local I/O modules. Additional power supplies shall be provided to power remotely located I/O modules.

2. Power supplies shall be modular type with a minimum output current of 4 amps. Power supplies shall operate on a 120 VAC, 1 phase power source.

3. The power supplies shall be sized by the manufacture's to provide sufficient backplane current to power the entire I/O module train (eight (8) modules each side of power supply). The power supplies shall be provided with a minimum of 25% spare capacity in addition to the total calculated backplane current for existing and future modules.

4. Power supplies shall be provided with input fusing, surge protection and shall provide isolation from the incoming source. The power supply shall be provided with integral status indicators.

E. Miscellaneous:

1. Provide special cabling, connectors, modules and appurtenances as required for proper connection and operation of the PLC system.

2.16 ETHERNET SWITCH

A. Provide Industrial Ethernet Switch(s) with a minimum of five ports for allowing communications between the Programmable Logic Controller (PLC) and the Operator Interface Terminal (OIT). The Industrial Ethernet Switch shall be an unmanaged fast ETHERNET din-rail switch compliant to IEEE 802.3 and ISO/IEC 8802/3 for extended environmental conditions.

B. Ethernet Switch shall have the following features.

1. Minimum Five 10/100 base TX ports
2. Twisted Pair cable, RJ45 sockets, auto-crossing, auto-negotiation, auto-polarity.
3. Distance: Twisted Pair 0-100 M
4. Operating Voltage 9.6 to 32 VDC
5. Diagnostic LED's: Power, link status, data and data rate
6. Accessories: Universal Ac power supply Model AC24VT

C. Industrial Ethernet Switch shall be Hirschmann Model Spider 5TX.

2.17 ETHERNET DIFFERENTIAL I/V MODULE

A. Provide an EtherNet Differential Input Module with current inputs to monitor all three phases of each pump's load current and display the results on the Operator Interface Terminal (OIT).

B. The EtherNet Module shall have the following features:

1. Input Range: Compatible with pump load current requirements with AC current sensor.
2. Network Communications: EtherNet/IP or Modbus TCO/IP 10/100 Mbps
3. Configurable from web browser.
4. UL Approval
5. Unit shall be capable of operating stand-alone with 6-input channels.
6. Power requirements 15 to 36 Volts DC (2 Watts)
7. EtherNet Differential I/V Module shall be Acromag BusWorks Series 961EN-6006 analog input module.
8. Provide AC current sensor for converting pump load current into a usable signal for the EtherNet I/V module. Current sensors shall be placed on the load side of the starter to monitor each phase of the pump's current.
9. Provide current transformers on each phase as needed should pump load current exceed current sensor input range.
10. Current sensor shall be compatible with EtherNet differential input module and shall convert AC sensed current into low voltage signal for use by the EtherNet differential input module.

2.18 PROXIMITY SWITCH

A. Provide an inductive proximity switch to be mounted on each pump check valve to monitor the movement of the check valve arm for determination of flow from the pump through the check valve.

B. The proximity switch shall have the following features:

1. Construction: Nickel plated brass 12 mm diameter IP-67 (NEMA 4)
2. Nominal Sensing distance 4 mm
3. Integral cable
4. Two wire operation 20 -120 VAC normally open output.
5. LED indicator 360 Degree visibility

C. Proximity Switch shall be Allen Bradley model 872C.

2.19 FLOAT SWITCH

A. Float switches shall be narrow angle control duty with integral cable and weight.

B. Conery Manufacturing Model 2900-B1-S1-C1.

2.20 SPARE PARTS

A. Provide the following spare parts related to products in this section:

1. One of each type of power supply, including PLC power supply

2. Two of each type of I/O cards provided on the project.

3. One PLC processor.

4. Two of each type of intrinsically safe barrier relays provided on the project.

5. One power surge protector (TVSS).

6. One analog circuit surge protector.

7. Two analog current isolators, if used.

8. One digital display of each type used.

9. One box each type of fuses used – minimum 3 each fuse of each type.

10. Five LED of each color used for the pilot lights.

11. One control relay and one timing-relay of each type used.

12. Two proximity switches.

B. Spare parts shall be provided in the manufacturer's standard packaging, and shall be clearly labeled with the following information:

1. Component type

2. Project name and number

3. Specification section

PART 3 – EXECUTION

3.01 INSTALLATION

A. Install the PLC, I/O modules and panel devices in the control panel per manufacturer's recommendations. Terminate wires from all I/O points to the terminal blocks within the control panel.

B. Equipment Mounting: Provide six inch minimum clearance between conduit and tubing entrances and the closest wiring trough or terminal strip. All equipment mounted within the enclosure shall be easily accessible for servicing.

C. Conduit Penetration: Where conduits will be entering the bottom of the enclosure, a suitable opening shall be cleanly punched in the bottom. Holes drilled, cut with a saw, torch, etc., in the field, will not be acceptable. Conduit entrances shall be towards the back of the enclosure to provide a shelf area on the bottom of the enclosure. Conduit nuts with sealing rubber gasket shall be used on all conduits entering boxes and cabinets.

D. Conduit Penetrations for Intrinsically Safe Circuits: Where conduits enter the enclosure and are for intrinsically safe circuits; space shall be provided to ensure safe circuits and non-safe circuits are separated as required by UL-698A and NEC Article 504.

3.02 CONTROL PANEL FABRICATION

A. All components, equipment, wiring, controls and appurtenances indicated and specified to be installed in the control panel shall be installed by the CSI.

B. Door mounted controls and equipment shall be mounted such that they are easily accessible, with components mounted a minimum of 30" above finished floor elevation and a maximum of 72" above finished floor elevation.

C. Intrinsically safe barriers and circuit wiring shall be physically separated

from all other wiring and components in accordance with the NEC and UL-698A. Intrinsically safe components and circuits shall be grouped together in one location within the panel.

D. For control panels with intrinsically safe circuits extending to hazardous areas, the control panel shall be fabricated to UL-508 Standards, and be UL-698A listed with serialized label. All other control panels shall be UL-508A Listed.

3.03 PUMP CONTROL SYSTEM TESTING

Testing shall be as detailed in Specification Section 13010 and the PFM.

END OF SECTION

SECTION 13344

CS-FVNR STATION INPUT/OUTPUT POINT LIST

PART 1 - GENERAL

1.01 SCOPE

A. These Constant Speed-Full Voltage Non Reversing (CS-FVNR) specifications are intended to be used for wastewater pump stations less than fifteen (15) horsepower in the City of Suffolk, Virginia.

B. This section describes the input/output (I/O) point list for the Programmable Logic Controller (PLC) to be installed for monitoring and control of the pump station and associated equipment. The I/O list is included at the end of this section.

C. The I/O list includes interface points between the PLC and the pump station controls housed in the Pump Control Panel (PCP), between the PLC and field equipment, SCADA System and instrumentation, and between the PLC and the pump current monitors for Pump-1 and Pump-2. The City's SCADA system will allow monitoring of status and alarm conditions at the pump station.

PART 2 - PRODUCTS

2.01 GENERAL

A. The I/O point list contains the information necessary to configure the I/O interface hardware and to indicate range conversion or signal functions associated with the PLC.

B. POINT NAME is an alphanumeric character string. For the point F-123, the following apply:

1. The letter (F) is the functional identification. In the example, the "F" represents flow. Refer to the instrumentation legend on the Instrumentation Drawings for function identification representation, or in the legend contained herein.

2. The three digit number (123) identifies the loop number or field device.

C. DESCRIPTION is an alphanumeric character string up to twenty-four positions in length. FUTURE indicates future points for which pre-wired I/O hardware shall be provided. SPARE indicates spare points for which pre-wired I/O hardware shall be provided. All future and spare I/O points shall be wired to field terminal

blocks and provided with output relays and fuses in the manner specified for active points.

D. SIGNAL TYPE shall be one of the following:

1. AI – designates an analog input (all are 4-20 mA)

2. DI – designates a digital input.

3. AO – designates an analog output (all are 4-20 mA)

4. DO – designates a momentary, maintained or latched digital output.

E. DATA FIELD 1 and DATA FIELD 2 describe the function or signal characteristics. These are further defined under each signal type.

F. RELAY is used only for digital outputs to indicate the type of control relay:

1. MO designates momentary.

2. MA designates electrical latching.

3. LA designates mechanical latching.

G. ALARM is used only for digital inputs to distinguish between status inputs, and alarm inputs.

1. A designates Alarm.

2. No designation indicates a status point only.

2.02 PLC ANALOG INPUT

A. DATA FIELD 1 is the electrical input signal range and units.

B. DATA FIELD 2 is the process parameter range and engineering unit.

2.03 PLC DIGITAL INPUT

A. DATA FIELD 1 is the condition that exists when a field contact is open.

B. DATA FIELD 2 is the condition that exists when a field contact is closed.

2.04 PLC ANALOG OUTPUT

A. DATA FIELD 1 is the electrical output signal and units.

B. DATA FIELD 2 is the range of the controlled variable and engineering units.

2.05 PLC CONTROL DIGITAL OUTPUT

A. Control digital outputs can be momentary, maintained or latched.

B. DATA FIELD 1 is the contact closed function.

C. DATA FIELD 2 is the contact open function.

PART 3 - EXECUTION

3.01 POINT DATA FIELDS AND I/O POINTS

A. I/O point data fields shall be subject to review and modification by the Department during the shop drawing review phase. All changes directed by the Department shall be incorporated completely into the entire system at no increase in Project price subject to the following limitations:

1. The total number of modifications shall be limited to 20% of the total number of I/O points.

2. All changes to each unique I/O point shall count as one modification. For example, modifying the description, range, or engineering units on an analog input shall count as one modification.

3. Analog input alarm limit definition shall not be counted as a modification.

B. I/O points shall be subject to review and modification by the Department during the shop drawing review phase. Points may be changed from SPARE to ACTIVE, with corresponding changes to the point data fields, with no increase in Project price, subject to the following limitations:

1. No more than 20 points may be changed from SPARE to ACTIVE points.

2. Points that are changed from SPARE to ACTIVE shall be the same type (i.e., changing a spare AI to an active AI).

3.02 INSTRUMENTATION NOMENCLATURE

A. Refer to the INSTRUMENTATION IDENTIFICATION SCHEDULE on the following page for use in referencing point and tag numbers.

INSTRUMENT IDENTIFICATION SCHEDULE

FIRST LETTER				SUCCEEDING LETTER		
	VARIABLE	**MODIFIER**		**PASSIVE FUNCTION**	**OUTPUT FUNCTION**	**MODIFIER**
A	Analysis			Alarm		Automatic
B	Breaker			User's Choice	Close or Stop	Bypass
C	Communications				Control	
D	Density	Differential			Open or Start	
E	Voltage (EMF)			Primary Element	Sensor	
F	Flow Rate	Ratio		Fail	Fail	Fail
G	Gauging			Glass		Local/Man./Hand
H	Hand					High or Open
I	Current			Indicate		Intermediate
J	Power	Scan				
K	Time	Time Rate			Control Station	
L	Level			Light		Low or Close
M	Motor	Momentary			Motor	Middle
N	User's Choice			Input	Forward	On or Operate
O					Off	Overload
P	Pressure	Pneumatic		Point (Test)	Position	
Q	Quantity of Event	Totalize			Emergency/Abnormal	
R	Radioactivity			Record or Print	Remote	Run
S	Speed or Frequency	Sum		Switch	Switch	Stop
T	Temperature				Transmit	
U	Multivariable			Multifunction	Multifunction	Multifunction
V	Variable or Viscosity				Valve or Damper	VFD/Valve
W	Weight or Force			Well		
X	Mod. Light or Valve			Unclassified	Unclassified	Unclassified
Y	Interlock				Relay or Compute	Reverse
Z	Position				Drive or Actuator	

3.03 PLC INPUT /OUTPUT POINT LIST

A. The Input/Output List reflects Pumping Station I/O requirements. I/O and memory point assignments shall be as listed herein and on the drawings. The I/O list contained herein shall be used to identify actual quantities of the various types of I/O cards required for the project.

TAG Name	Description	Card Slot	Point	Type	Data Field 1	Data Field 2	Remarks
	WASTEWATER PUMPING STATION						
					OFF STATE	ON STATE	
	DISCRETE INPUT						
SS-2A	PUMP 1 IN HAND MODE	1	0	DI		HAND	FROM PCP PUMP 1 H-O-A
SS-2B	PUMP 1 IN AUTO MODE	1	1	DI		AUTO	FROM PCP PUMP 1 H-O-A
TSH-101	PUMP 1 MOTOR WINDING HIGH TEMPERATURE	1	2	DI	NORMAL	ALARM	FROM PCP MOTOR CONNECTION
SFR-101	PUMP 1 SEAL FAIL	1	3	DI	NORMAL	SEAL FAIL	FROM SEAL MONITOR RELAY
ZSX-101	PUMP 1 PUMP CHECK VALVE STATUS	1	4	DI	CLOSED	OPEN	FROM CHECK VALVE PLC INPUT
LPB-1	PUMP 1 PUMP FAIL RESET	1	5	DI		RESET	FROM PCP LPB-1
M-1	PUMP 1 RUNNING	1	6	DI	OFF	RUNNING	FROM PUMP 1 STARTER CONTACT
OL-1	PUMP 1 OVERLOAD	1	7	DI	NORMAL	ALARM	FROM PUMP 1 STARTER OVERLOAD
	SPARE	1	8	DI			
	SPARE	1	9	DI			
SS-1	PUMP 1 REMOTE POSITION	1	10	DI	LOCAL	REMOTE	FROM PUMP 1 STARTER SWITCH
SS-1A	LEAD LAG PUMP SELECTION 1-2	1	11	DI	ALT	1-2	FROM PCP SS-1
SS-1B	LEAD LAG PUMP SELECTION 2-1	1	12	DI	ALT	2-1	FROM PCP SS-1
FS-1 (CR-DW)	DRY WELL LEVEL HIGH	1	13	DI	NORMAL	ALARM	FROM DRY WELL FLOAT
FS-2 (CR-AL)	FLOAT MODE STOP (LEVEL LOW)	1	14	DI	NORMAL	ALARM	FROM LOW WET WELL FLOAT
FS-3 (CR-AH)	FLOAT MODE START (HIGH LEVEL)	1	15	DI	NORMAL	ALARM	FROM HIGH WET WELL FLOAT
SS-3A	PUMP 2 IN HAND MODE	2	0	DI		HAND	FROM PCP PUMP 2 H-O-A
SS-3B	PUMP 2 IN AUTO MODE	2	1	DI		AUTO	FROM PCP PUMP 2 H-O-A
TSH-201	PUMP 2 MOTOR WINDING HIGH TEMPERATURE	2	2	DI	NORMAL	ALARM	FROM PCP MOTOR CONNECTION
SFR-201	PUMP 2 SEAL FAIL	2	3	DI	NORMAL	SEAL FAIL	FROM SEAL MONITOR RELAY
ZSX-201	PUMP 2 PUMP CHECK VALVE STATUS	2	4	DI	CLOSED	OPEN	FROM CHECK VALVE PLC INPUT
LPB-2	PUMP 2 PUMP FAIL RESET	2	5	DI		RESET	FROM PCP LPB-2
M-2	PUMP 2 RUNNING	2	6	DI	OFF	RUNNING	FROM PUMP 2 STARTER CONTACT
OL-2	PUMP 2 OVERLOAD	2	7	DI	NORMAL	ALARM	FROM PUMP 2 STARTER OVERLOAD

TAG Name	Description	Card Slot	Point	Type	Data Field 1	Data Field 2	Remarks
	SPARE	2	8	DI			
	SPARE	2	9	DI			
SS-2	PUMP 2 REMOTE POSITION	2	10	DI	LOCAL	REMOTE	FROM PUMP 2 STARTER SWITCH
GR-1	GENERATOR RUN	2	11	DI	OFF	RUNNING	FROM GENERATOR
GF-1	GENERATOR COMMON FAULT	2	12	DI	NORMAL	FAIL	FROM GENERATOR
CR-PFR	LOSS OF CONTROL POWER	2	13	DI	POWER FAIL	POWER ON	FROM PUMP CONTROL PANEL CONTROL POWER RELAY
UV-101	LOSS OF STATION POWER	2	14	DI	POWER FAIL	POWER ON	FROM TRANSFER SWITCH 3 PHASE POWER LOSS
XFR-101	TRANSFER SWITCH POSITION	2	15	DI	COMMERCIAL	EMERGENCY	FROM TRANSFER SWITCH
	DISCRETE OUTPUT						
MC-101C	PUMP 1 PUMP REQUIRED	3	0	DO	OFF	REQUIRED	TO PCP (REQUIRED PL-8) & CR-1
MI-101A	PUMP 1 RUNNING	3	1	DO	OFF	RUNNING	TO PCP (RUNNING PL-9) & TO SCADA
MF-101A	PUMP 1 FAULT/LOCKOUT	3	2	DO	OFF	FAULT	TO PCP (FAILED LPB-1) & ALARM TO SCADA
TSH-101	PUMP 1 OVER TEMPERATURE	3	3	DO	OFF	OVER TEMP	TO PCP (OVER TEMP PL-5)
SFM-1	PUMP 1 SEAL FAIL	3	4	DO	OFF	SEAL FAIL	TO PCP (SEAL FAIL PL-4)
MF-101B	PUMP 1 ALARM	3	5	DO	OFF	ALARM	FROM PCP ALARM TO SCADA
NF-110	PLC FAIL	3	6	DO	NORMAL	ALARM	FROM PCP ALARM TO SCADA
	SPARE	3	7	DO			
UV-110	POWER FAIL	3	8	DO	NORMAL	ALARM	FROM PCP ALARM TO SCADA
LSH-101	FLOAT MODE START	3	9	DO	NORMAL	ALARM	FROM PCP ALARM TO SCADA
LSL-101	FLOAT MODE STOP	3	10	DO	NORMAL	ALARM	FROM PCP ALARM TO SCADA
	SPARE	3	11	DO			
	SPARE	3	12	DO			
	SPARE	3	13	DO			
	SPARE	3	14	DO			
	SPARE	3	15	DO			
MC-201C	PUMP 2 PUMP REQUIRED	4	0	DO	OFF	REQUIRED	TO PCP (REQUIRED PL-10) & CR-2

TAG Name	Description	Card Slot	Point	Type	Data Field 1	Data Field 2	Remarks
MI-201A	PUMP 2 RUNNING	4	1	DO	OFF	RUNNING	TO PCP (RUNNING PL-11) & TO SCADA
MF-201A	PUMP 2 FAULT/LOCKOUT	4	2	DO	OFF	FAULT	TO PCP (FAILED LPB-2) & ALARM TO SCADA
TSH-201	PUMP 2 OVER TEMPERATURE	4	3	DO	OFF	OVER TEMP	TO PCP (OVER TEMP PL-7)
SFM-2	PUMP 2 SEAL FAIL	4	4	DO	OFF	SEAL FAIL	TO PCP (SEAL FAIL PL-6)
MF-201B	PUMP 2 ALARM	4	5	DO	OFF	ALARM	FROM PCP ALARM TO SCADA
GR-1	GENERATOR RUN	4	6	DO	NORMAL	ALARM	ALARM TO SCADA
GF-1	GENERATOR FAIL	4	7	DO	NORMAL	ALARM	ALARM TO SCADA
XFR-101	ATS EMERGENCY POSITION	4	8	DO	NORMAL	ALARM	ALARM TO SCADA
	SPARE	4	9	DO			
	SPARE	4	10	DO			
	SPARE	4	11	DO			
	SPARE	4	12	DO			
	SPARE	4	13	DO			
	SPARE	4	14	DO			
	SPARE	4	15	DO			
	ANALOG INPUT						
LI-100	WET WELL LEVEL	5	0	AI	4-20 mA	0-35.6 FEET	FROM LE/LT-100
PI-200	FORCE MAIN PRESSURE	5	1	AI	4-20 mA	0-100 PSI	FROM PE/PT-200
	SPARE	5	2	AI	4-20 mA		
	SPARE	5	3	AI	4-20 mA		
	ANALOG OUTPUT						
PUMP-1C	PUMP-1 LOAD CURRENT	6	0	AO	4-20 Ma	0-100	VALUE TO BE DETERMINED
PUMP-2C	PUMP-2 LOAD CURRENT	6	1	AO	4-20 Ma	0-100	VALUE TO BE DETERMINED
	SPARE	6	2	AO			
	SPARE	6	3	AO			

END OF SECTION

SECTION 13347

CS-FVNR STATION CONTROL SYSTEM DESCRIPTION

PART 1 - GENERAL

1.01 DESCRIPTION:

A. These Constant Speed-Full Voltage Non Reversing (CS-FVNR) specifications are intended to be used for wastewater pump stations less than fifteen (15) horsepower in the City of Suffolk, Virginia.

B. This section includes the requirements for programming the PLC and OIT for monitoring, operation and control of the pump station as well as interfacing with the City's SCADA system. All work specified herein shall be performed by the Department's designated representative for programming. This section is provided as a guideline to ensure that the Programmable Logic Controller and Operator Interface Terminal provided by the Control System Integrator are adequate to allow programming as specified herein.

1.02 ABBREVIATIONS:

CSI	Control Systems Integrator
I/O	Input / Output
OIT	Operator Interface Terminal
PLC	Programmable Logic Controller
PCP	Pump Control Panel
UL	Underwriters Laboratory
UPS	Uninterruptible Power Supply
TVSS	Transient Voltage Surge Suppressor
EEPROM	Electrically Erasable Programmable Read Only Memory

1.03 QUALITY ASSURANCE

A. The CSI shall demonstrate to the Department, prior to beginning the work, that the CSI has qualified staff available to develop the required control system and documentation, and shall demonstrate that such staff has experience with working with the programming software being used on the Project.

1.04 SUBMITTALS

A. The CSI shall submit the name or names of the persons who will be responsible for coordinating with the Department's programming representative for the PLC and OIT.

PART 2 – PRODUCTS

Not Used

PART 3 – EXECUTION

3.01 GENERAL

A. The CSI shall utilize the control descriptions described herein, as well as the Instrumentation drawings, and the I/O list contained in Section 13344, CS-FVNR Station Input/Output Point List to develop drawings for the PLC, the OIT and connections to the SCADA System. The PLC, OIT and SCADA System programming will be by the Department's designated representative. The programs, working in conjunction with one another, shall constitute a comprehensive monitoring and control system for the pump station.

B. The control descriptions contained herein are intended to provide the minimum amount of detail for programming of the operational modes of control, with emphasis on automatic control modes.

C. Programming code and databases shall be developed for all I/O listed in referenced I/O list, regardless of whether or not the point is included in the control descriptions.

D. Abbreviations:

1. The following abbreviations with corresponding definitions are used in the control descriptions, and pertain directly to the OIT and PLC unless otherwise noted:

a. AUTO: Control mode selected at OIT whereby PLC logic functions control operation of equipment or system

b. MANUAL: Control mode selected at OIT whereby operator manual input controls operation of equipment or system

c. ICON: Symbol representing a piece of equipment, functions, or commands on a pictorial display on the OIT

d. LOCKOUT: A piece of operating equipment such as a pump or fan that is selected at the OIT for being locked out from an operating sequence. This allows the particular piece of equipment to be overlooked in the operating sequence so that its lack of operation does not cause an alarm to be generated.

e. PCP: Pump Control Panel

E. Alarms:

1. Provide a means via the OIT to acknowledge an alarm in the system. The alarm shall not cease until the alarm is acknowledged, the alarm condition ceases, and the main reset pushbutton on the OIT has been depressed for reset.

2. A PLC hardware problem or fault shall constitute an alarm that shall be transmitted to the City's SCADA system.

3. Each alarm shall be provided with a timing function that can be set via the OIT alarm set point screen.

F. Operator Adjustments:

1. The PLC and OIT programs shall allow for the following:

a. Adjustment of alarm settings derived from analog signals from the OIT.

b. Time delay functions for each alarm point, with capability of adjusting timing functions from the OIT.

c. Acknowledgement and resetting of alarm signals via the OIT.

d. Time and date on each display screen

e. PLC fail signal output using monitoring of PLC time clock for each PLC

f. Security levels and corresponding security access codes for PLC programs and for operator selections on OIT screens.

g. Capability for selecting individual pieces of equipment for disabling at the OIT such that the equipment is not called to operate, and alarms associated with the equipment will not be generated.

h. Timing functions to delay re-starting of equipment when power is transferred from normal to standby, and on re-transfer of power. Timing functions shall be provided to stagger re-starting of the wastewater pumps, Pump-1, and Pump-2. Timing functions shall also apply to re-transfer to normal power if equipment loads drop

off line during re-transfer.

i. Alarms for loss of level transmitter signal.

3.02 CONTROL DESCRIPTIONS – WASTEWATER PUMPS (PUMP 1, PUMP 2):

A. Manual and automatic pump control:

1. General

a. Pumps shall normally operate in an automatic mode in an alternating pump configuration with stop/start control via the PLC. Pump Control Panel (PCP) will be provided with a Hand-Off-Auto selector switch for each pump.

2. Pump Control Modes – PLC and OIT

a. Two control modes shall be selectable at the OIT for each individual pump as follows:

1) Full Manual
2) Full Automatic

b. In Full Manual mode, the pump start/stop for the individual pump may be manually selected at the OIT or the control panel PCP by the operator.

c. In the Full Automatic mode, the pumps shall operate based on the automatic control scheme described herein for Automatic Control for both start and stop.

3. Automatic Control - Pump Selection:

a. The OIT shall be provided with the capability to display the pump sequence assignment to be made in lead/lag through selector switch on PCP. The starters shall be selected for “Auto” at the Starter, and the 1-2, ALT, 2-1 switch shall be selected for one of the pump assignments as described below.

b. The pump assignments shall be capable of being changed via the selector switch on PCP. Distinct selections for pump operation shall be provided on the selector switch on PCP as follows:

1) Fixed (1-2 or 2-1 pump selection).

2) Automatic Alternation (ALT)

c. When the Fixed mode is selected, the pump assignment (lead or lag) shall remain stationary until new assignments are made by an operator by placing the 1-2, ALT, 2-1, selector switch on PCP in a new position. Changing of the pumping assignments shall only take place when all pumps are stopped.

d. In the Automatic Alternation mode (ALT), the pump assignments (lead or lag) shall automatically alternate each time the lead pump starts and then stops, shifting sequentially such that the lead pump next becomes the lag pump, and the lag pump then becomes the lead pump.

e. Changes made during pump operation shall be implemented automatically. If a change is made to pump assignments during pump operation, a notation shall be displayed on the OIT that a change has been made, and the pump assignments for the current operating scheme shall be displayed on the OIT. The pump in operation at the time of the change shall be ramped down to stop. Once the operating pump is stopped the new pump assignment shall be assumed; the new lead pump shall start and the new operating sequence shall continue until changed.

4. Automatic Control – Stop, and Start:

a. There shall be at least four (4) level settings used in the stop, start control of the pumps. The level settings are as indicated on the Instrumentation Drawings or as directed by the Department. The level settings are based on the level transducer signal input to the PLC, and are as follows, in order of ascending elevation:

1) Level sensor (transducer) 1 foot from bottom of wet well.
2) Low Water Level Alarm (Set Point) _____Feet
3) Float Mode Stop Level (Float) _____Feet
4) All Pumps Stop (Stop Set Point) _____ Feet
5) Lead Pump Start (Start Lead Set Point) _____ Feet
6) Lag Pump Start (Start Lag Set Point) _____Feet
7) Float Mode Start Level (Float) _____Feet
8) High Water Level Alarm (Float) _____Feet

b. Each level setpoint shall be individually adjustable at the OIT by the operator. <u>This operation shall be password protected.</u>

c. On rising level, the pump selected for lead pump shall start at the Start level.

d. If the lead pump is running and the wet well level rises to the lag pump start level, the pump selected for lag will start.

e. On falling level, when the wet well level drops to the stop level set point, all pumps shall decelerate to stop.

5. Automatic Fail Over:

a. If a pump fails to start when required, or a fault occurs during operation, an alarm shall be generated and the next pump in the sequence shall start and take the place of the failed pump. The failed pump shall be locked out of operation until the alarm has been reset at the PCP/OIT, and the PLC shall not allow the pump to be started in the "Auto" mode while the alarm condition exists.

6. Pump Over Temperature:

a. Upon sensing a pump over temperature condition in the pump, the control system shall cause the pump to stop operating, lockout the pump until reset and index to the next pump in the sequence. The pump over temperature light shall be illuminated and the OIT shall display pump over temperature alarm for the affected pump until reset.

b. A pump failure alarm shall be generated and sent to the SCADA system for transmission and alarming at the Water Treatment Plant.

7. Pump Seal Failure:

a. Upon sensing a pump seal fail condition the control system shall cause a seal failure light to be illuminated. The light shall remain illuminated until the condition is cleared. The condition shall not require the pump to stop operating.

8. Failure to Pump:

a. A proximity switch shall be installed on the check valve to detect movement of the check valve swing arm. When a pump is required to operate and any time during the pump operation, if the check valve fails to open or remains closed for a preset time a Pump Flow Failure Alarm shall be displayed on the OIT for the affected pump until reset. Pump fail time shall be determined and set during start up. The condition shall not require the pump to

stop operating.

9. Pump LOCKOUT:

a. The capability shall be provided at the OIT to select a pump for LOCKOUT. When selected for LOCKOUT, the particular pump shall not be capable of being selected in the pump control, and shall not be available for operation via the PLC and OIT. The LOCKEDOUT pump shall display LOCKEDOUT on the corresponding Pump 1 or Pump 2 screen.

B. Wet well level and force main signals:

1. Displays:

a. The wet well level signal will be transmitted to the PLC and shall be displayed on the OIT and the digital level display; the signal will be a 4-20 mA signal proportional to the water level in the wet well.

b. The force main pressure signal will be transmitted to the PLC and shall be displayed on the OIT and the digital pressure display; the signal will be a 4-20 mA signal proportional to the force main pressure.

2. Signal Failure and Loss of Signal:

a. Should the PLC sense a level signal failure such as a reading outside of the boundary of the 4-20 mA signals, or a loss of a level signal, an alarm shall be generated, and transmitted to the OIT and SCADA System.

b. Should the level transmitter signal fail, the PLC shall automatically shift the pump control mode to the float switch back up mode.

c. Should the level in the wet well fall to the low wet well level alarm point, as indicated on the Instrumentation Drawings, then an alarm shall be generated on the OIT, and transmitted to the SCADA System. The low wet well float switch shall be used for an auxiliary pump stop in the event pump does not stop on a normal falling level transmitter signal.

d. Float switch backup mode shall operate between the Float Mode Start level float and the Float Mode Stop level float until the

analog level signal is restored and the backup mode is released/reset through the OIT. Should the high level alarm float be reach while the level transmitter is within its normal operating range, the PLC shall operate as if the level transmitter has failed and switch to the float switch back-up mode until reset.

e. The OIT shall indicate when the station is operating in Float or Level Modes.

C. Loss of communication signal and plc failure:

1. In the event of a PLC failure or fault, an alarm shall be generated and transmitted to the SCADA System. During a PLC failure or fault the motor starters shall be operable from the LOCAL-OFF-REMOTE switch.

D. Station Alarms

1. Any alarm generated by the PLC or received as an input to the PLC shall be displayed on the OIT and/or transmitted to the SCADA System as summarized in Table-1.

Table 1 – STATION ALARMS

Alarm	OIT	SCADA	Remarks
PUMP 1 - OVER TEMPERATURE ALARM	YES	YES	PUMP 1 FAIL (SHUTDOWN)
PUMP 1 - SEAL FAIL ALARM	YES	YES	PUMP 1 FAULT (ALARM)
PUMP 1 - FLOW FAIL ALARM (PUMP 1 FAIL TO START)	YES	YES	PUMP 1 FAULT (ALARM)
PUMP 1 - STARTER FAULT ALARM	YES	YES	PUMP 1 FAIL (SHUTDOWN)
PUMP 1 - NOT IN AUTO ALARM	YES	NO	
PUMP 1 - FAIL TO RUN ALARM	YES	YES	PUMP 1 FAIL (SHUTDOWN)
PUMP 1 - LOCKED OUT BY HMI SCREEN PUSHBUTTON	YES	YES	PUMP 1 FAIL (SHUTDOWN)
PUMP 2 – OVER TEMPERATURE ALARM	YES	YES	PUMP 2 FAIL (SHUTDOWN)
PUMP 2 - SEAL FAIL ALARM	YES	YES	PUMP 2 FAULT (ALARM)
PUMP 2 - FLOW FAIL ALARM (PUMP 2 FAIL TO START)	YES	YES	PUMP 2 FAULT (ALARM)
PUMP 2 - STARTER FAULT ALARM	YES	YES	PUMP 2 FAIL (SHUTDOWN)
PUMP 2 - NOT IN AUTO ALARM	YES	NO	
PUMP 2 - FAIL TO RUN ALARM	YES	YES	PUMP 2 FAIL (SHUTDOWN)
PUMP 2 - LOCKED OUT BY HMI SCREEN PUSHBUTTON	YES	YES	PUMP 2 FAIL (SHUTDOWN)
FLOAT MODE START (From float switch via PLC)	YES	YES	
FLOAT MODE STOP (From float switch via PLC)	YES	YES	
WET WELL LEVEL SENSOR FAILURE	YES	NO	
ATS EMERGENCY POSITION	YES	YES	
GENERATOR FAULT ALARM	YES	YES	
DRY WELL HIGH LEVEL ALARM	YES	YES	
PLC FAIL	NO	YES	

END OF SECTION

SECTION 13400

CS-FVNR STATION SCADA SYSTEM

PART 1 - GENERAL

1.01 DESCRIPTION

A. These Constant Speed-Full Voltage Non Reversing (CS-FVNR) specifications are intended to be used for wastewater pump stations less than fifteen (15) horsepower in the City of Suffolk, Virginia.

B. This section includes requirements for the furnishing, installation and testing of the SCADA system at the pump station. SCADA equipment and components shall be furnished by the CSI unless otherwise specified.

C. Monitoring of the pump station operation and equipment and alarm status shall be accomplished using hard wired I/O connected to the PCP, equipment, and other instrumentation.

1.02 SUBMITTALS

A. Shop drawings shall be submitted for all items in accordance with Section 01300 CS-FVNR Station Submittals and as specified herein. Items for which shop drawings shall be submitted shall include, but not be limited to, the following:

1. Catalog data, mounting details, wiring connection diagrams, and manufacturer's installation instructions.

2. Operation and maintenance manuals.

PART 2 – PRODUCTS

2.01 SCADA UNIT

A. Telog RS-3330 with 30 channels.

B. 1xV cellular modem with antenna.

C. See Section instrumentation drawings for required SCADA system signals.

D. See Telog Termination Diagram provided as a SUPPLEMENT to this section.

2.02 SCADA UNIT POWER SUPPLY WITH BATTERY BACK-UP

A. Power supply for SCADA unit shall be provided.

B. Power supply shall convert 120VAC, 60Hz power to 12VDC power with sufficient voltage regulation and ripple control to assure that instruments being supplied are operating within their required tolerance.

C. Output over voltage and over current protective devices shall be inherent in power supplies to protect instruments from damage due to power supply failure and to protect the power supply from damage due to external failure.

D. Manufacturer and model: Telog AC12B4

2.03 SCADA UNIT ENCLOSURE

A. Provide single enclosure for SCADA unit, power supply, and battery.

B. Enclosure for interior installation shall have the following features:

1. Enclosure shall be thermoplastic NEMA 4X.
2. Hinge and 2-point latching

2.04 DOOR ENTRY MONITORING SYSTEM (DEMS)

A. Telog DEMS-RECP. Wall-mounted box with dongle key receptacle.

B. SENTROL Model 1085T door switch, normally open.

PART 3 – EXECUTION

3.01 INSTALLATION

A. Install as described herein, as shown on the Drawings, and in accordance with the manufacturer's requirements. Route conduit and wire I/O from PCP, equipment, and instrumentation to SCADA Unit in a neat and professional manner.

B. All wire connections to the Telog Unit shall be labeled to identify the incoming signal using descriptive labeling, in English.

C. SCADA Unit, Power Supply, and Battery

1. Install in SCADA Unit enclosure. Route 120V power conduit and wire from local power panel.

2. Provide the ESN (electronic serial number) for the Telog modem at least fourteen (14) days prior to testing of the SCADA system so that the

Department can have the cellular provider assign the cell account to the unit with a static IP address.

D. SCADA Unit Enclosure

1. Wall-mount in the inside of the pump station adjacent to PCP. Mount cellular antenna to the exterior of the enclosure by screwing onto a bulk head fitting on the top of the enclosure.

E. DEMS

1. Wall-mount DEMS-RECP in the inside of the pump station adjacent to the door. Mount door switch on main entry door.

3.02 TESTING

A. Test all device alarm points after all devices, machines and systems which are equipped to initiate alarms have been installed, tested and approved. Prior to testing data transmission described below, submit checklist documenting each signals and alarms have been successfully tested from their source to the Telog Unit for the 30 I/Os of the Telog (if the signal is not used or is a spare indicate this by 'N/A'. The checklist shall have a list of each Telog signal and the date, time, and person who tested each signal as correctly being received at the Telog (printed name and signed). Final verification of the Telog to ensure it is receiving signals via the cell phone system will not be tested until the checklist has been completed and signed off.

B. Provide a minimum of fourteen (14) calendar days notice before testing of the City's SCADA System. The Department will establish cellular communications with the SCADA Server and program the SCADA Unit.

C. After all signals and alarms have been successfully tested and fourteen (14) calendar days notice has been provided, test and confirm data transmission between the PCP, equipment, and instrumentation and the City's SCADA System. Correct any signals or alarms that are not interfacing correctly with Telog unit and assist Department and Engineer as necessary to start up system.

D. Coordinate with the Department and Engineer to test all alarm signals, status signals, and analog signals connected to the SCADA System for presentation on the Department's display and alarm notification devices. Any alarms, status signals or analog signals that are not found to be operational shall be retested until satisfactory results are accomplished.

PART 4 – SUPPLEMENT

4.01 Telog Termination Diagram.

Notes:

1. SIGNALS 3 AND 4 ARE ONLY USED FOR STATIONS WITH VFD'S.
2. SIGNAL 11 IS ONLY USED FOR STATIONS WITH RAIN GAUGES.
3. SIGNALS 21 AND 22 ARE ONLY USED FOR STATIONS WITH PERMANENT EMERGENCY GENERATORS.
4. SIGNAL 24 IS ONLY USED FOR STATIONS WHEN PUMPS ARE LOCATED IN A DRY WELL.

Telog_IO_Wiring_346716.jpg, Rev 09/29/2014

END OF SECTION

SECTION 13420

CS-FVNR STATION INSTRUMENTATION

PART 1 - GENERAL

1.01 DESCRIPTION

A. These Constant Speed-Full Voltage Non Reversing (CS-FVNR) specifications are intended to be used for wastewater pump stations less than fifteen (15) horsepower in the City of Suffolk, Virginia.

B. This section includes requirements for field instrumentation to be installed throughout the pump station as well as control stations and controls for installation in control panels, and miscellaneous instruments and controls not specified elsewhere. All equipment and components shall be furnished by the CSI unless otherwise specified.

1.02 SUBMITTALS

A. Shop drawings shall be submitted in accordance with Section 01300 CS-FVNR Station Submittals for all items specified herein. Items for which shop drawings shall be submitted shall include, but not be limited to, the following:

1. Wet Well level sensor/transmitters (level transducer) and Force Main pressure transmitter, including catalog data, mounting details, wiring connection diagrams, and manufacturer's installation instructions. Provide catalog data on the surge protection to be provided with the transmitters, as well as catalog data for the intrinsically safe barrier relay to be provided with the transmitter.

2. Provide certified factory calibration report for Force Main Pressure Transmitter assembly.

3. Catalog information on the following equipment and controls:

   a. Wet Well Level Sensor/transmitter
   b. Force Main Pressure Transmitter
   c. Wet Well Level Indicator
   d. Force Main Pressure Indicator

4. Provide operation and maintenance manuals for the following items:

   a. Wet Well Level transmitter
   b. Force Main Pressure transmitter
   c. Wet Well Level Indicator

d. Force Main Pressure Indicator

5. Field calibration reports shall be provided for the post installation calibration of the force main pressure transmitter, digital indicators and the level transmitter.

1.03 MANUFACTURER'S INSPECTION AND START-UP

A. The Contractor shall furnish and coordinate the services of all instrumentation manufacturers' qualified field representatives to supervise the installation, inspect the equipment after installation, and monitor the initial operation for a minimum of one eight (8) hour workday. The manufacturers' representatives shall supervise the final field calibration of the instruments.

1. Wet Well level transmitter, Force Main pressure transmitter and digital indicators combined.

2. Services provided by manufacturers' representatives shall be separate and distinct from any required training that is specified to be provided.

PART 2 – PRODUCTS

2.01 WET WELL TRANSMITTER (SUBMERSIBLE)

A. The level transmitter shall be the submersible pressure sensing type constructed of a piezoresistive pressure cell fitted into a Type 316 stainless steel package with integral monolithic Kynar diaphragm with Type 316 stainless steel housing. The output shall be a 4-20 mA analog signal directly proportional to the level of water submerging the transducer. The level transmitter shall be loop powered two-wire and have integral built-in lightning protection as a standard product.

B. A suitable power supply for the level transmitter shall be supplied.

C. The transmitter level range shall be 0-15 psig (0-34.6 feet H2O). The transmitter shall be located in the wet well in a 6" PVC stilling well so as not to suffer damage from turbulence. Stilling well shall be attached to the wet well wall with Type 316L stainless steel bands and fasteners not less than 3 feet apart over the length of the stilling well. Level transmitter shall be furnished with a watertight vented Tefzel jacketed cable to support the transmitter without additional cabling. The transmitter shall comply with NEMA 6P and IP68 requirements for submersion up to 900 feet. The transmitter cable shall be continuous without splices from the transmitter to PCP terminal blocks. A conduit shall be supplied for the transducer once the cable exits the Hazardous Location. Provide length of cable as required to connect the transmitter to the PCP. Provide 1" conduit for transmitter cable between the wet well junction box and PCP.

D. An aneroid bellows shall be furnished with the transmitter for attaching to the vent tube for atmospheric pressure change compensation. Desiccant vent filters will not be allowed.

E. The transmitter and cable shall be suitable for installation in a Class I, Division 1, Group D, Hazardous (Classified) Location. An intrinsically safe barrier relay shall be provided to create an intrinsically safe circuit for the transducer. The barrier relay shall be compatible with the transmitter provided, and shall be approved by the transmitter manufacturer for use with the transmitter.

F. Level transmitter shall be Factory Mutual Certified type Birdcage BC001-01002AA/CT-FM intrinsically safe submersible liquid level transmitter, as manufactured by Blue Ribbon, Grand Island, NY or model 750 as manufactured by Esterline KPSI, Hampton, Virginia.

2.02 FORCE MAIN PRESSURE TRANSMITTER

A. The force main discharge pressure sensor shall be of 1” threaded tap mounted type, suitable for raw sewage at 0-2 percent solids. The sensor shall be designed to isolate pipe line media from integral instrumentation and shall be located as shown on the Project Drawings. The sensor shall be equipped with a minimum 4-inch diameter dual scale liquid filled Type 316 stainless steel housing pressure gauge and a non-indicating pressure transmitter. Pressure gauge and pressure transmitter shall be suitable for the pressure range specified. Pressure transmitter is to be wired to the control panel to display discharge pressure on the digital pressure indicator and through the PLC’s GUI and to the SCADA System transmitter. The pressure sensor assembly shall consist of a Type 316 stainless steel body with threaded end connections, flexible Viton^{tm} element acting upon a DC200 silicon fluid fill, transferring pressure to the transmitter/gauge assembly. Assembly shall include 1” bronze corporation stop, 1” Onyx annular ring, 1” Type 316 stainless steel ball valve, 1” female CamLok fitting, pressure gauge and pressure transmitter as shown in drawing at the end of this section or as detailed on the plans. Pressure sensor assembly with all components shall be fully assembled, filled, and calibrated at the factory. Submit certified factory calibration data for the pressure transmitter assembled components.

B. The pressure sensor shall be a 1” annular ring as manufactured by Onyx.

C. Pressure transmitter shall be Model 27 range 0-100 psig with surge protection and two wire 4-20 mA output as manufactured by KPSI.

D. Pressure gauge shall be 0-50 psig for lift stations and 0-100 psig for stations pumping into force mains; ½” bottom feed 4-½”, liquid-filled, Ashcroft.

2.03 DIGITAL INDICATORS

A. Wet Well Level and Force Main Pressure digital indicators shall be a high performance, easy to use, industrial grade microprocessor-based digital process meters. The indicator shall accept all standard process signals (4-20 mA, 1-5 V, & 0-10 V) and displays these signals in engineering units on a 4½ digit display. The indicator shall be equipped with an isolated 4-20 mA output signal option. The indicator shall be programmable to produce a 4-20 mA output for virtually any input. The 4-20 mA output signal may be powered either by an internal or an external power supply.

B. The digital indicators shall be NEMA 4X, IP65 front panel rated and the NEMA 4X, IP65 front panel does not restrict access to the setup buttons.

C. Digital Indicators shall be UL-508 Listed.

D. Digital Indicators shall be type PD690, as manufactured by Precision Digital Corporation.

2.04 LOOP ISOLATOR

A. Analog signal isolator shall provide optical isolation between input and output stages of the isolator. Isolation shall be 1500 Volts AC peak minimum (250 V AC or 354 V DC continuous). Input and output channels shall be galvanic isolated.

B. Analog signal isolator shall be signal channel input with signal or dual output as necessary.

C. Analog isolator shall be 24 Volt DC powered and be UL Listed.

D. Analog isolator shall be Acromag, AGM.

2.05 SPECIALTIES

A. Instrument Tags: Provide engraved Type 316L stainless steel instrument tags with Type 316L stainless steel attachment chains for field instrumentation. Where instrument is submerged, provide tag at convenient location along cable or cord where it is readily accessible.

2.06 SPARE PARTS

A. The following spare parts shall be provided for instrumentation equipment:

1. Submersible Level Transducer: Provide one spare submersible level transducer, with cable length same as the installed transducers.

2. One digital indicator to match device provided.

PART 3 - EXECUTION

3.01 INSTALLATION

A. Install all instrumentation in accordance with the manufacturer's recommendations and as shown on the Project Drawings and as specified herein.

3.02 TESTING

A. The CSI shall be responsible for testing all control panels, instrumentation and controls that were furnished by the CSI. The CSI and the Contractor shall calibrate, operate, adjust and test all controls and instrumentation to assure complete and satisfactory installation and performance. All necessary test equipment shall be provided by the Contractor. The Contractor shall make all necessary changes and adjustments to equipment, all at no added cost to the Department.

1. Test all device alarm points after all devices, machines and systems which are equipped to initiate alarms have been installed, tested and approved.

2. Provide documentation in writing that test equipment has a current calibration certificate not less than six months old at time of instrumentation commissioning. Calibration shall be by a testing laboratory that is traceable to the NIST.

END OF SECTION

This page intentionally left blank.

SECTION 16420

CS-FVNR STATION INDIVIDUAL MOTOR STARTERS

PART 1 - GENERAL

1.01 NOTE

A. These Constant Speed-Full Voltage Non Reversing (CS-FVNR) specifications are intended to be used for wastewater pump stations less than fifteen (15) horsepower in the City of Suffolk, Virginia.

1.02 SCOPE

A. The work includes all labor, materials, equipment and services necessary for the installation of a complete system.

B. The Contractor shall verify compatibility of each motor starter, the motor served by the motor starter, and the electrical power to them, before he connects to any item of equipment.

C. The functional control of all motors shall be as specified under other sections of the specifications, and as shown on the Project drawings. The Contractor shall provide all necessary control devices, parts, components and circuitry to accomplish the functions indicated.

1.03 SUBMITTALS

A. Submit shop drawings, manufacturer's product data, etc., in accordance with provisions of Section 01300 - Submittals. Manufacturer's data shall include specifications and installation instructions. Include data substantiating that proposed materials comply with specified requirements.

PART 2 - PRODUCTS

2.01 MANUAL STARTERS

A. Manual starters shall be "toggle" or "pushbutton" actuated. "Toggle" actuators shall be labeled to indicate "on" and "off" positions. "Pushbutton" actuators shall be labeled "start" and "stop". Provide with Hand-Off-Auto selector switch where indicated.

B. Provide each manual starter with a red LED indicator light to "illuminate" when power is present on the load side of the starter.

C. Provide a properly sized NEMA rated starter/ contactors and overload protection device (in each phase) to be compatible with the motor it controls.

D. Provide manual starter with NEMA 12 enclosure, except where they are affected by outdoor weather or in damp locations provide manual starter with NEMA 4X Type 316L stainless steel enclosure. All outdoor Panels shall be Type 316L stainless steel. Motor starting switch enclosures for switches not in sight of motor controlled shall have handle guards which permit padlocking in the "Off" position.

E. Starters shall be Allen Bradley.

2.02 NEMA RATED MAGNETIC STARTERS

A. Magnetic starters shall be furnished with NEMA rated magnetic contactors and external manual reset overload relay for eutectic melting alloy or bimetallic thermal overload units.

B. Starters for 3-phase motors shall be full voltage, non-reversing, electrically operated, electrically held, three-pole assemblies with three phase overload protection properly sized for the motor protected, unless otherwise indicated.

C. Starters shall be equipped with the following features, unless otherwise indicated on the drawings:

1. 120 volt control transformer with two primary fuses and one secondary fuse and sized to accommodate all connected control circuit devices.

2. Local-Off-Remote selector switch.

3. Push-to-test red "Off" and green "Running" LED type pilot lights.

4. Auxiliary contacts and devices, as required, by control sequences specified in other sections of this specifications and as indicated on Electric Control Diagrams (provide one N.O. and one N.C. minimum), in addition to seal-in and interlocking.

5. Auxiliary control relay, 2 pole.

6. Provide auxiliaries as indicated on Control Drawings.

D. Provide combination starter with NEMA 12 enclosures, except where they are affected by outdoor weather (such as those above the roof) or in damp locations, provide combination starters with NEMA 4X Type 316L stainless steel enclosures.

E. Non-combination or combination starters shall be Allen Bradley. Fusible or non-fusible starters shall be provided where indicated. Circuit breaker combination starters shall incorporate adjustable instantaneous trip-only motor circuit protectors.

2.03 CURRENT TRANSMITTER (for FULL VOLTAGE NON-REVERSING STARTERS ONLY).

A. Alternating Current Transmitter shall provide six (6) input channels for monitoring Alternating Current Sensors placed on the load side of the starter to monitor the pump current and transmit values to the PLC.

B. Analog current sensors shall be size to provide proper input to Alternating Current Transmitter and to provide proper current sensing range for the pump current measured. Sensor shall be Acromag 5020-350.

C. Alternating Current Transmitter shall be furnished with an RJ45 Ethernet connection for communicating to an Ethernet Switch or direct to PLC.

D. Provide all cabling and programming software as necessary for complete operation of Current Transmitter.

E. Alternating Current Transmitter be 24 Volt DC powered and be UL Listed.

F. Analog isolator shall be Acromag 961EN.

PART 3 - EXECUTION

3.01 EXECUTION

A. Provide each motor starter with a laminated plastic nameplate engraved to indicate the equipment it controls. Include nameplate nomenclature to be used with shop drawings.

END OF SECTION

This page intentionally left blank.

APPENDIX H

CONSTANT SPEED DRIVE DRAWINGS

This page intentionally left blank.

INSTRUMENT SYMBOL IDENTIFIERS

J-3 (J-1 / J-2) J-4 J-5 J-6

J-1: IDENTIFICATION LETTERS (SEE TABLE BELOW)
J-2: LOOP NUMBER
J-3: VENDER DESIGNATOR (SEE NOTE 3)
J-4: FUNCTION BLOCK (SEE TABLE BELOW)
J-5: PANEL NUMBER
J-6: HAND SWITCH DESIGNATOR (SEE BELOW)

	FIRST LETTER		SUCCEEDING LETTER		
	VARIABLE	MODIFIER	PASSIVE FUNCTION	OUTPUT FUNCTION	MODIFIER
A	ANALYSIS		ALARM		AUTOMATIC
B	BREAKER		USER'S CHOICE	CLOSE OR STOP	BYPASS
C	COMMUNICATIONS			CONTROL	CLOSED
D	DENSITY	DIFFERENTIAL		OPEN OR START	
E	VOLTAGE (EMF)		PRIMARY ELEMENT	SENSOR	
F	FLOW RATE	RATIO	FAIL	FAIL	FAIL
G	GAUGING		GLASS		LOCAL/MANUAL/HAND
H	HAND				HIGH OR OPEN
I	CURRENT		INDICATE		INTERMEDIATE
J	POWER	SCAN			
K	TIME	TIME RATE		CONTROL STATION	
L	LEVEL		LIGHT		LOW
M	MOTOR	MOMENTARY		MOTOR	MIDDLE
N	USER'S CHOICE		INPUT	FORWARD	ON OR OPERATE
O	USER'S CHOICE			OFF	OPEN
P	PRESSURE	PNEUMATIC	POINT (TEST)	POSITION	
Q	QUANTITY OR EVENT	TOTALIZE		EMERGENCY/ABNORMAL	
R	RADIOACTIVITY		RECORD OR PRINT	REMOTE	RUN
S	SPEED OR FREQUENCY	SUM	SWITCH	SWITCH	STOP
T	TEMPERATURE			TRANSMIT	TRANSDUCER
U	MULTI VARIABLE		MULTIFUNCTION	MULTIFUNCTION	MULTIFUNCTION
V	VARIABLE OR VISCOSITY			VALVE OR DAMPER	VFD / VALVE
W	WEIGHT OR FORCE		WELL		
X	MOD, LIGHT OR VALVE		UNCLASSIFIED	UNCLASSIFIED	UNCLASSIFIED
Y	INTERLOCK			RELAY OR COMPUTE	RESET
Z	POSITION			DRIVE OR ACTUATOR	

GENERAL INSTRUMENT OR FUNCTION SYMBOLS	FIELD MOUNTED	PRIMARY LOCATION ACCESSIBLE TO OPERATOR	AUXILIARY LOCATION ACCESSIBLE TO OPERATOR	NORMALLY INACCESSIBLE OR BEHIND THE PANEL
DISCRETE INSTRUMENTS				
SHARED DISPLAY, SHARED CONTROL				
COMPUTER FUNCTION				
PROGRAMMABLE LOGIC CONTROL				

J-4 FUNCTION BLOCK DESIGNATORS

- SUMMING
- DIFFERENCE
- INTEGRAL
- DERIVATIVE
- MULTIPLYING
- DIVIDING
- CONVERT:
- ROOT EXTRACTION
- SQUARE ROOT
- EXPONENTIAL
- HIGH SELECTING
- LOW SELECTING
- BIAS
- NON-LINEAR OR UNSPECIFIED FUNCTION

* E-VOLTAGE, I-CURRENT, P-PNEUMATIC, A-ANALOG, B-BINARY
H-HYDRAULIC, O-ELECTROMAGNETIC, SONIC, R-RESISTANCE, D-DIGITAL

J-6 HAND SWITCH DESIGNATORS

HS XXX SELECTOR SWITCH (MAINTAINED CONTACTS)

XXX = HOA: HAND-OFF-AUTO
= HOR: HAND-OFF-REMOTE
= F-R: FORWARD-REVERSE
= 1-0: ON-OFF
= B-V: BYPASS-VFD
= L-O-R: LOCAL-OFF-REMOTE
= OC: OPEN-CLOSE
= POT: POTENTIOMETER
= OCA: OPEN-CLOSE-AUTO
= L-R: LOCAL-REMOTE

HMS XXX PUSHBUTTON (MOMENTARY CONTACTS)

XXX = RES : RESET
XXX = ACK : ACKNOWLEDGE

INSTRUMENT SUPPLY SERVICES

AS — INSTRUMENT AIR SUPPLY REFER TO ISA RP7.7 FOR INSTRUMENT AIR QUALITY STANDARDS

ES — 120 VAC ELECTRICAL SERVICE (DIFFERENT VOLTAGES ARE SPECIFICALLY NOTED)

PLC INPUT/OUTPUT

- DISCRETE INPUT
- ANALOG INPUT
- DISCRETE OUTPUT
- ANALOG OUTPUT

PLC INDICATION

XXX

MODIFIER XXX LEGEND
PCP = PUMP CONTROL PANEL (PCP)

VALVE OPERATORS

- DIAPHRAGM
- CYLINDER OPERATOR
- DIAPHRAGM PRESSURE BALANCED
- SOLENOID
- MOTOR
- SOLENOID VALVE

PRIMARY FLOW ELEMENTS

- ORIFICE PLATE
- VENTURI TUBE
- FLUME
- WEIR PLATE
- MAGNETIC FLOW METER
- SONIC FLOW METER
- FLOW NOZZLE
- VORTEX SENSOR

LINES

- MAIN PROCESS
- PIPE SYSTEM
- PIPE SIZE IN INCHES
- ELECTRICAL SIGNAL
- SOFTWARE OR DATA LINK
- PNEUMATIC
- HYDRAULIC
- CAPILLARY TUBE
- ELECTROMAGNETIC OR SONIC (GUIDED)

MECHANICAL — ELECTRICAL

OR — CONNECTED

NOT CONNECTED

MISCELLANEOUS

- FLANGE
- UNION
- TEE
- REDUCER
- DIAPHRAGM SEAL
- INTERLOCK. NUMBER IS THE CROSS REFERENCE TO A SPECIFIC ELEMENTARY DIAGRAM OR TO A SPECIFIC CONTROL STRATEGY DESCRIBED IN THE SPECS
- EXPANSION JOINT
- FLEXIBLE COUPLING
- FLANGED COUPLING ADAPTER
- SLUICE/SIDE/WEIR GATE
- WATER LINE
- LEVEL PROBES (CONDUCTIVITY)
- LEVEL PROBES (ULTRASONIC)
- FLOAT SWITCH

EQUIPMENT

- 3-PHASE MONITOR
- ELAPSED TIME METER
- OPERATOR INTERFACE TERMINAL
- LEVEL TRANSDUCER (SUBMERSIBLE)
- HORN
- SUBMERSIBLE PUMP
- PUMP

VALVES

- GATE VALVE
- GLOBE VALVE
- PLUG VALVE
- CHECK VALVE
- PINCH VALVE
- DIAPHRAGM VALVE
- BUTTERFLY VALVE
- BALL VALVE

TYPICAL CONNECTIONS

- IN-LINE DEVICE
- DIRECT CONNECTION TO PROCESS
- TEMPERATURE ELEMENT WITH WELL
- RADIATION OR SONIC SENSING
- DIAPHRAGM SEAL CONNECTION

ABBREVIATIONS

A	= ALARM
AI	= ANALOG INPUT
AO	= ANALOG OUTPUT
AUTO	= AUTOMATIC
ATS	= AUTOMATIC TRANSFER SWITCH
CIM	= COMMUNICATIONS INTERFACE MODULE
CPT	= CONTROL POWER TRANSFORMER
DI	= DISCRETE INPUT
DO	= DISCRETE OUTPUT
DPDT	= DOUBLE POLE-DOUBLE THROW
E-STOP	= EMERGENCY STOP BUTTON
EUH	= ELECTRIC UNIT HEATER
ETM	= ELAPSED TIME METER
F	= FAULT
FP	= FLOW PACE
HMI	= HUMAN MACHINE INTERFACE
I	= INTERLOCK CONTROL
I/O	= INPUT/OUTPUT
IP	= INFLUENT PUMP
LM	= LEVEL MAINTAIN CONTROL
M	= ELECTRIC MOTOR
MMR	= MOTOR MANAGEMENT RELAY
MOD	= MOTOR OPERATED DAMPER
MPD	= MOTOR PROTECTIVE DEVICE
O/C	= OPEN/CLOSE
OIT	= OPERATOR INTERFACE TOUCHSCREEN
OT	= OVER TEMPERATURE
PDIT	= PRESSURE DIFFERENTIAL INDICATION TRANSMITTER
PLC	= PROGRAMMABLE LOGIC CONTROLLER
PM	= PRESSURE MAINTAIN CONTROL
PSCADA	= PLANT SCADA SYSTEM
PVCC	= PVC COATED
R/O	= RUN/OFF
RTU	= REMOTE TELEMETRY UNIT
SL	= SEAL LEAK
SP	= SPEED
SP	= SUMP PUMP
S/S	= START/STOP
SSRV	= SOLID STATE REDUCED VOLTAGE
TEMP	= TEMPERATURE
TSP	= TWISTED SHIELDED PAIR
TYP	= TYPICAL
VAC	= VOLTS/ALTERNATING CURRENT
VDC	= VOLTS/DIRECT CURRENT
VFD	= VARIABLE FREQUENCY DRIVE
XX	= XX
XXX	= XXX

EQUIPMENT ABBREVIATIONS

IC	= INTEGRAL CONTROL UNIT
FSTB	= FLOAT SWITCH TERMINAL BOX
MCC	= MOTOR CONTROL CENTER
PCP	= PUMP CONTROL PANEL
PLC	= PROGRAMMABLE LOGIC CONTROLLER
TIP	= TERMINAL INTERFACE PANEL
VFD	= VARIABLE FREQUENCY DRIVE

ELEMENTARY WIRING SYMBOLS

- CONTROL RELAY
- PLC OUTPUT VIA INTERPOSING RELAY
- NORMALLY OPEN CONTACT
- NORMALLY CLOSED CONTACT
- FUSE
- CIRCUIT BREAKER
- PUSHBUTTON
- SELECTOR SWITCH X00 = REPRESENTS THE SWITCH POSITIONS
- MOTOR
- TERMINAL BLOCK
- GROUND
- FLOAT SWITCH
- NORMALLY OPEN LIMIT SWITCH
- NORMALLY OPEN TIMED CLOSED CONTACT
- THERMOSTAT CLOSE ON RISING/TEMPERATURE
- INDICATING LIGHT – A = AMBER, G = GREEN, R = RED, W = WHITE

NOTES:

1. THIS IS A GENERALIZED LEGEND SHEET. THIS PROJECT MAY NOT USE ALL INFORMATION SHOWN.
2. INFORMATION SHOWN MAY NOT BE ALL INCLUSIVE. ALSO SEE ISA S5.1, S5.3 AND S7.3.

NANSEMOND 1646 SUFFOLK 1742 19 74 CITY of SUFFOLK, VIRGINIA

CITY OF SUFFOLK, VIRGINIA

DEPARTMENT OF PUBLIC UTILITIES
442 W. WASHINGTON STREET
SUFFOLK, VA 23434

PUBLIC FACILITIES MANUAL VOLUME II

WASTEWATER PUMP STATION INSTRUMENTATION AND CONTROL

REVISIONS

NO.	DESCRIPTION	DATE

LEGEND AND ABBREVIATIONS

Drawing No.

I-1CSF

Scale: NOT TO SCALE | 2017 RELEASE 1

SPECIFIC NOTES:

1. PANEL DIMENSIONS SHOWN ARE MINIMUM REQUIRED. CONTROL PANEL HEIGHT NOT TO EXCEED 72".
2. FLOOR MOUNTED PANELS SHALL BE INSTALLED ON 3" HOUSEKEEPING PAD.

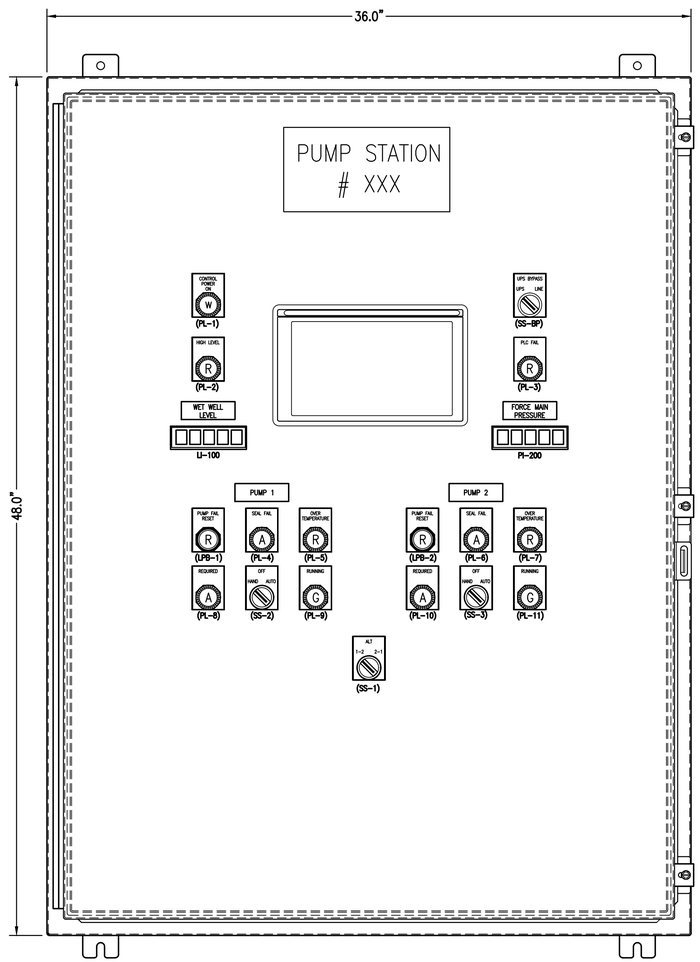

ELEVATION - PCP (1)(2)

NOT TO SCALE HOFFMAN A483612LP

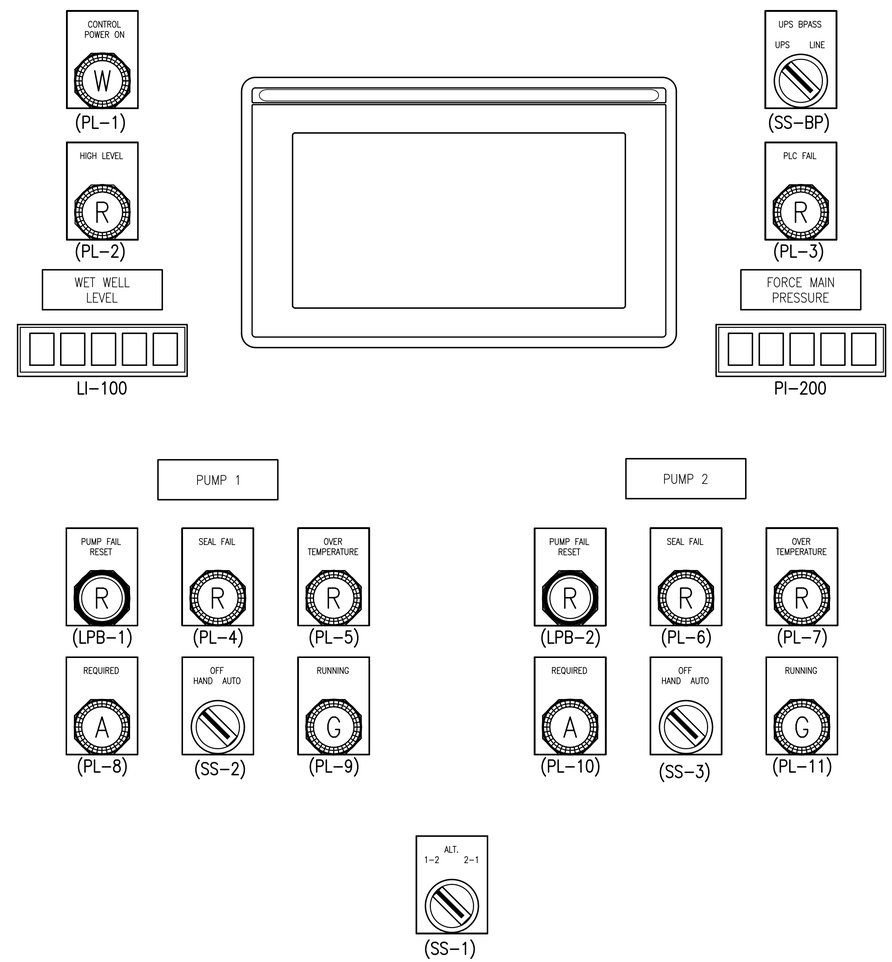

DOOR DEVICE LAYOUT

NANSEMOND 1646 SUFFOLK 1742 19 74 CITY of SUFFOLK, VIRGINIA

CITY OF SUFFOLK, VIRGINIA

DEPARTMENT OF PUBLIC UTILITIES
442 W. WASHINGTON STREET
SUFFOLK, VA 23434

PUBLIC FACILITIES MANUAL VOLUME II

WASTEWATER PUMP STATION INSTRUMENTATION AND CONTROL

REVISIONS

NO.	DESCRIPTION	DATE

PUMP CONTROL PANEL ELEVATIONS

Drawing No.

I-2CSF

Scale: NOT TO SCALE | 2017 RELEASE 1

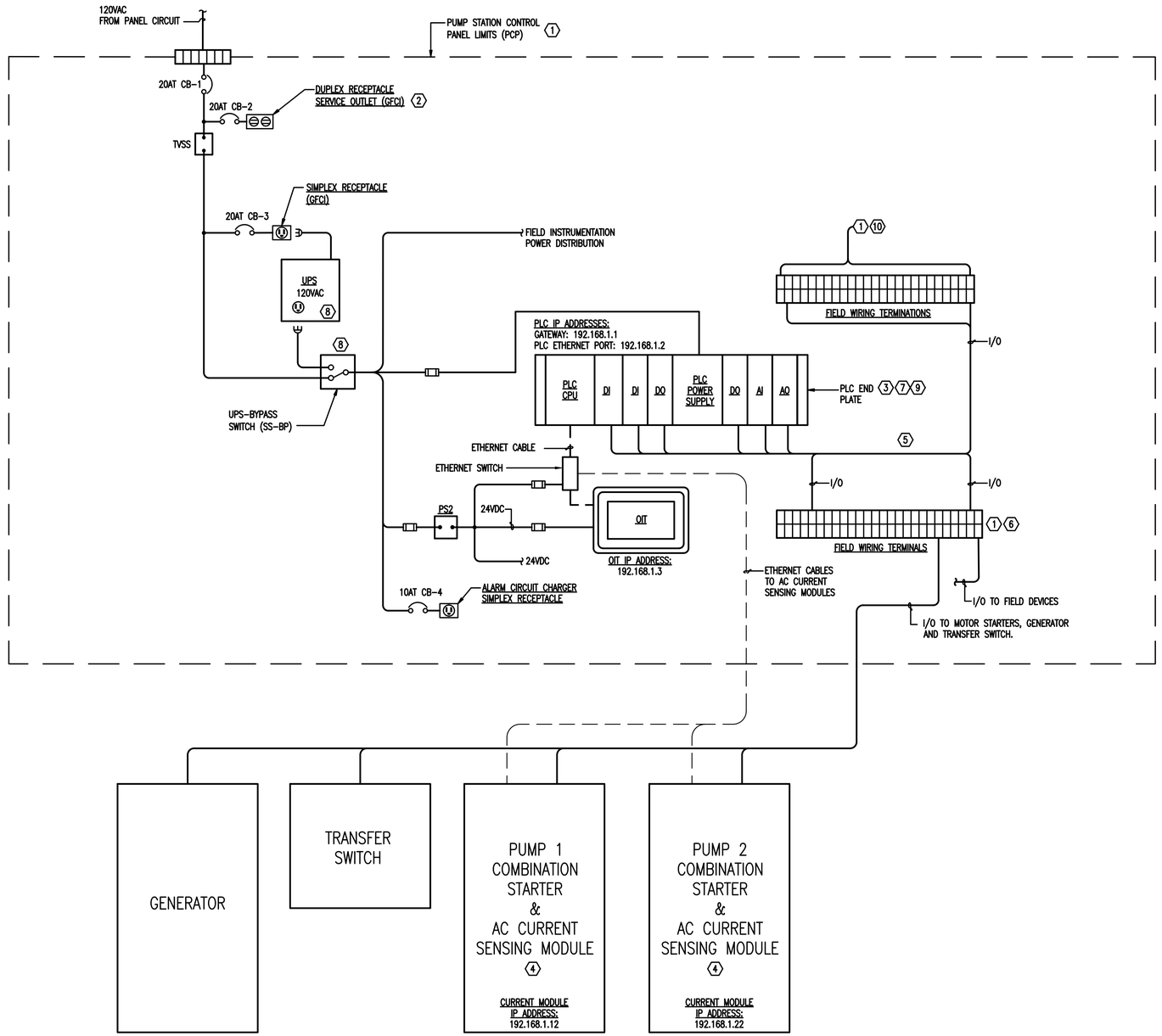

1 / I-3CSF **PCP SYSTEM LAYOUT**
NOT TO SCALE

SPECIFIC NOTES:

1. SCHEMATIC REPRESENTATION OF FIELD TERMINALS. SEPARATION OF DISCRETE AND ANALOG SIGNALS NOT SHOWN. SURGE PROTECTORS, AND RELAYS NOT SHOWN FOR CLARITY. REFER TO PCP ELEMENTARY DIAGRAM AND I/O LIST IN SPECIFICATIONS FOR SPECIFIC WIRING.
2. PROVIDE SERVICE OUTLET (GFCI)
3. PROVIDE I/O CARDS IN QUANTITIES AS REQUIRED. REFER TO PCP ELEMENTARY DIAGRAM AND I/O LIST IN SPECIFICATIONS FOR I/O REQUIREMENTS. I/O THAT IS NOT USED SHALL BE WIRED TO FIELD TERMINAL BLOCKS AND LABELED AS SPARES.
4. COMBINATION STARTERS ARE MOUNTED REMOTELY FROM CONTROL PANEL PCP. PROPERLY SIZE STARTER AND BREAKER FOR PUMP MOTOR.
5. DIAGRAM IS SCHEMATIC REPRESENTATION ONLY. PROVIDE TERMINAL BLOCKS, TERMINALS, WIRING, LABELS, RELAYS, SWITCHES AND COMPONENTS REQUIRED FOR PLC SYSTEM INSTALLATION AS REQUIRED FOR A COMPLETE OPERATING SYSTEM.
6. PROVIDE INTERPOSING RELAYS WITH SNUBBER CIRCUIT FOR DISCRETE OUTPUTS, INCLUDING SPARE DISCRETE OUTPUTS. PROVIDE SURGE PROTECTION FOR ANALOG INPUT CIRCUITS AND FUSES FOR ANALOG OUTPUT CIRCUITS, INCLUDING SPARES AI AND AO POINTS.
7. PROVIDE NECESSARY END PLATES FOR PLC AT BOTH ENDS IF REQUIRED.
8. PROVIDE UPS WITH BYPASS SWITCH FOR BACK-UP POWER; MINIMUM OF 2 HOURS.
9. NOT ALL REQUIRED I/O CARDS, SLOTS AND I/O RACKS ARE SHOWN. PROVIDE QUANTITY OF I/O CARDS, CARD TYPES, I/O RACKS, INTERFACE MODULES AND CABLING TO ACCOMMODATE THE QUANTITY OF I/O INDICATED IN THE SPECIFICATIONS.
10. PROVIDE SCADA INTERFACE TERMINALS FOR CONNECTION TO SCADA SYSTEM. SCADA I/O POINT SHALL BE AS SPECIFIED AND/OR AS DIRECTED BY THE OWNER. SEE SHEET I-11CSF FOR DETAILS

NANSEMOND 1646 SUFFOLK 1742
19 74
CITY of SUFFOLK, VIRGINIA

CITY OF SUFFOLK, VIRGINIA

DEPARTMENT OF PUBLIC UTILITIES
442 W. WASHINGTON STREET
SUFFOLK, VA 23434

PUBLIC FACILITIES MANUAL VOLUME II

WASTEWATER PUMP STATION INSTRUMENTATION AND CONTROL

REVISIONS

NO.	DESCRIPTION	DATE

PUMP CONTROL SYSTEM LAYOUT

Drawing No.
I-3CSF

Scale: NOT TO SCALE | 2017 RELEASE 1

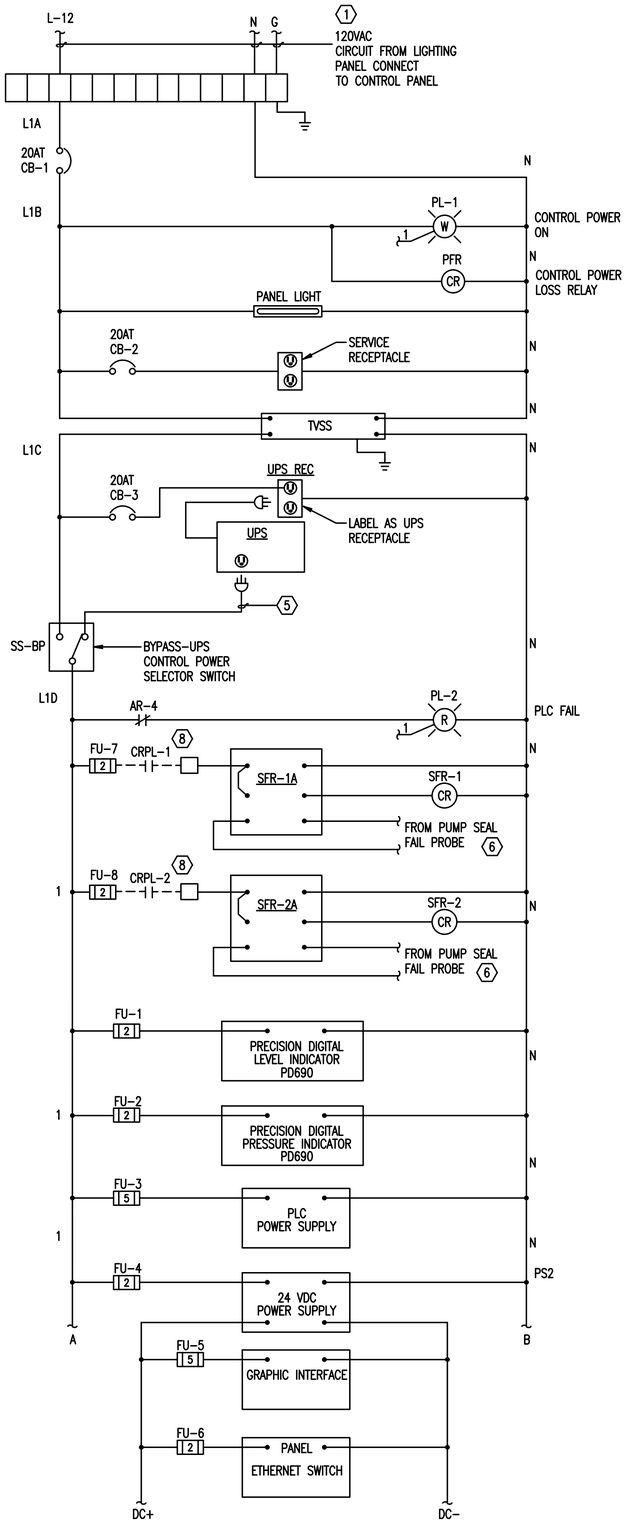

PUMP CONTROL PANEL PCP ELEMENTARY DIAGRAM - CONTROLS

NOT TO SCALE

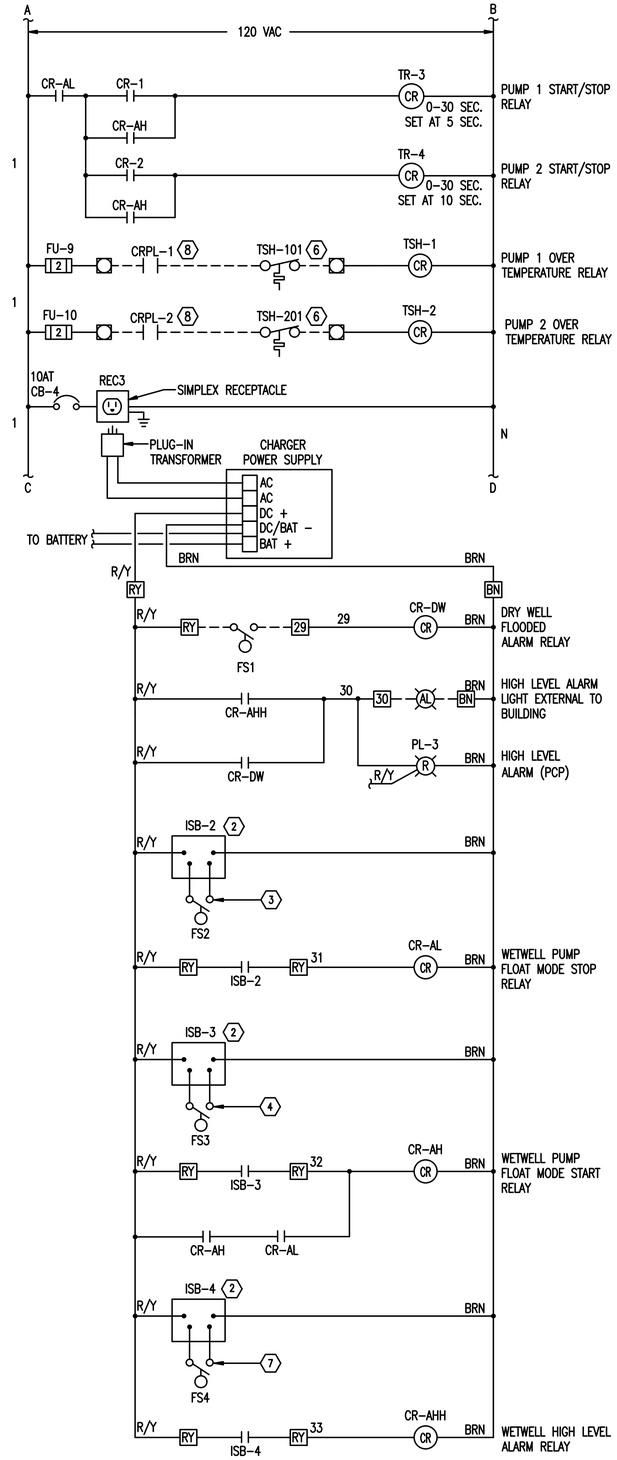

FLOAT CIRCUIT PART OF PCP

NOT TO SCALE

SPECIFIC NOTES

1. CONNECT TO LIGHTING PANEL BREAKER.
2. INTRINSICALLY SAFE BARRIER FOR LEVEL FLOAT SWITCH SIGNAL FROM WET WELL. PROVIDE PHYSICAL BARRIER BETWEEN INTRINSICALLY SAFE CIRCUIT WIRING AND ALL OTHER WIRING PER NEC REQUIREMENTS. MAINTAIN A MINIMUM OF 2" BETWEEN ISB AND ALL OTHER COMPONENTS AND WIRING IN PANEL. PROVIDE LABELS FOR CONDUIT CARRYING CIRCUIT TO INDICATE "INTRINSICALLY SAFE CIRCUIT".
3. CONNECT FLOAT SWITCH WIRING FROM LOW WET WELL LEVEL FLOAT SWITCH TO ISB-2. ENSURE WIRING IS INSTALLED PER NEC ARTICLE 504.
4. CONNECT FLOAT SWITCH WIRING FROM HIGH WET WELL LEVEL FLOAT SWITCH TO ISB-3. ENSURE WIRING IS INSTALLED PER NEC ARTICLE 504.
5. POWER CORD FOR UPS.
6. SEAL FAILURE RELAYS AND PUMP OVER TEMPERATURE CONTACT CONNECT TO PUMPS THROUGH CONDUIT FROM PUMP SPLICE BOX.
7. CONNECT FLOAT SWITCH WIRING FROM HIGH-HIGH LEVEL FLOAT SWITCH TO ISB-4. ENSURE WIRING IS INSTALLED PER NEC ARTICLE 504.
8. CRPL-1 LOCATED IN PUMP 1 STARTER, CRPL-2 LOCATED IN PUMP 2 STARTER

NANSEMOND 1646 SUFFOLK 1742 19 74 CITY of SUFFOLK, VIRGINIA

CITY OF SUFFOLK, VIRGINIA

DEPARTMENT OF PUBLIC UTILITIES
442 W. WASHINGTON STREET
SUFFOLK, VA 23434

PUBLIC FACILITIES MANUAL VOLUME II

WASTEWATER PUMP STATION INSTRUMENTATION AND CONTROL

REVISIONS

NO.	DESCRIPTION	DATE

PUMP CONTROL PANEL POWER WIRING

Drawing No.

I-4CSF

Scale: NOT TO SCALE | 2017 RELEASE 1

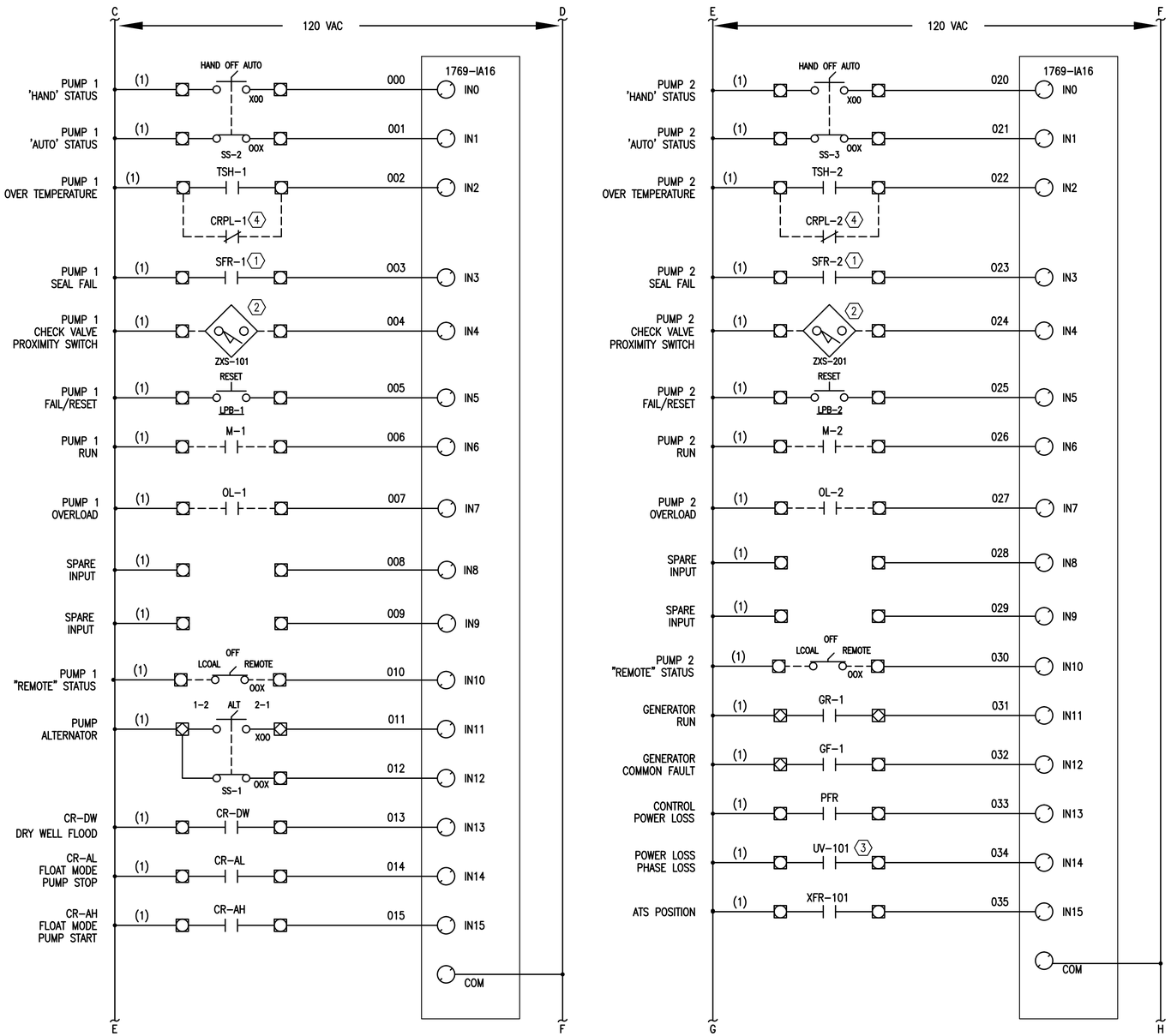

PUMP CONTROL PANEL PLC INPUT

NOT TO SCALE

DRAWING NOTES:

1. PUMP SEAL MONITOR AND PUMP OVER TEMPERATURE ARE WIRED TO PUMP THROUGH CONDUIT AND SPLICE BOX. PROVIDE TERMINALS IN SPLICE BOX FOR PUMP CONNECTIONS.
2. CHECK VALVE PROXIMITY SWITCHES SHALL BE CLOSED WHEN CHECK VALVES ARE CLOSED.
3. UNDERVOLTAGE MONITOR SHALL BE MOUNTED IN GENERATOR TRANSFER SWITCH AND CONNECTED TO LOAD SIDE.
4. CRPL-1 LOCATED IN PUMP 1 STARTER, CRPL-2 LOCATED IN PUMP 2 STARTER

DEVICES SHOWN - - - - - ARE FIELD MOUNTED.

NANSEMOND 1646 SUFFOLK 1742 19 74 CITY of SUFFOLK, VIRGINIA

CITY OF SUFFOLK, VIRGINIA

DEPARTMENT OF PUBLIC UTILITIES
442 W. WASHINGTON STREET
SUFFOLK, VA 23434

PUBLIC FACILITIES MANUAL VOLUME II

WASTEWATER PUMP STATION INSTRUMENTATION AND CONTROL

REVISIONS

NO.	DESCRIPTION	DATE

PUMP CONTROL PANEL PLC INPUT

Drawing No.

I-5CSF

Scale: NOT TO SCALE | 2017 RELEASE 1

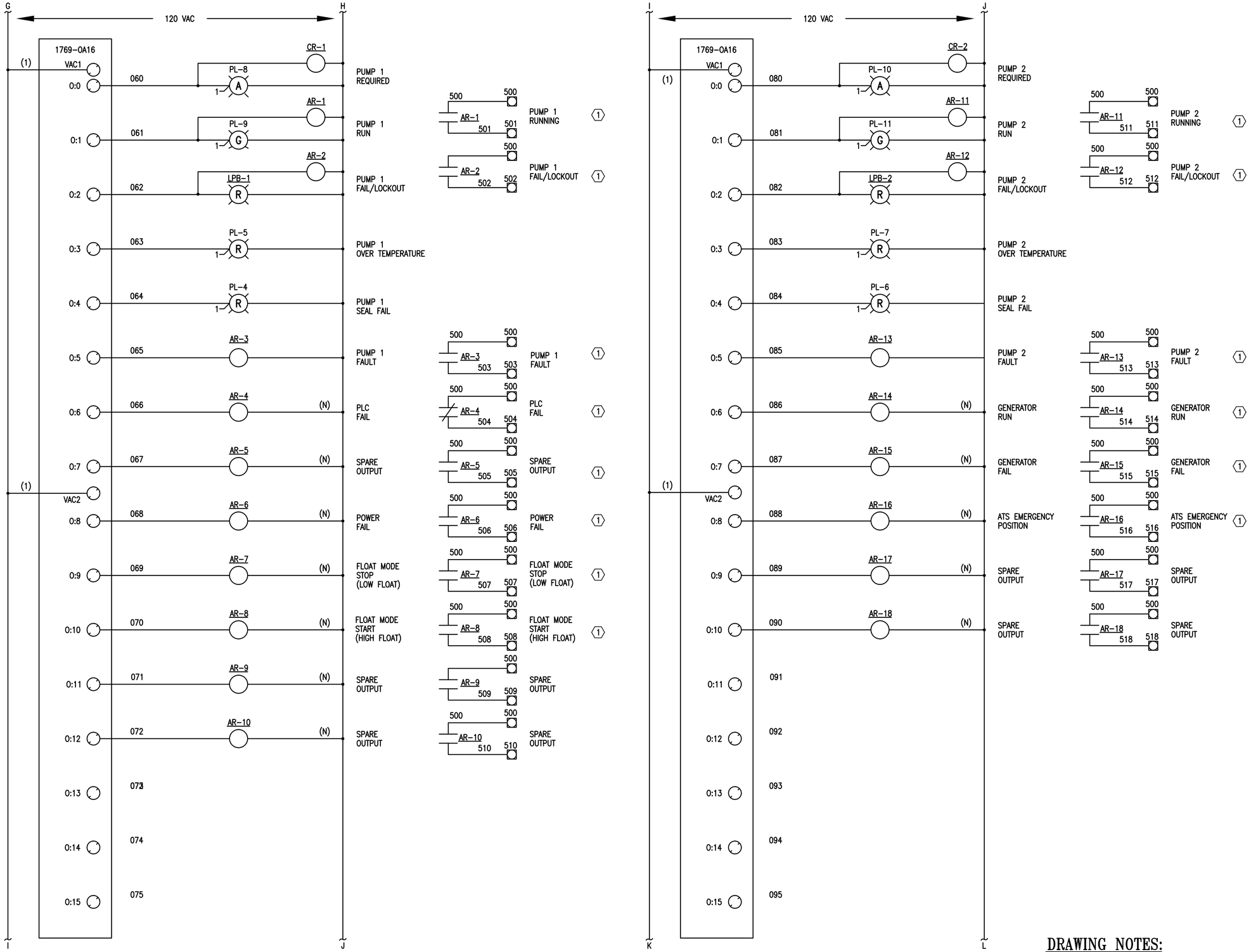

PUMP CONTROL PANEL PLC OUTPUT

NOT TO SCALE

DRAWING NOTES:

1. STATUS AND ALARM POINTS ARE WIRED FOR SCADA SYSTEM

DEVICES SHOWN - - - - - - ARE FIELD MOUNTED.

NANSEMOND 1646 SUFFOLK 1742 19 74 CITY of SUFFOLK, VIRGINIA

CITY OF SUFFOLK, VIRGINIA

DEPARTMENT OF PUBLIC UTILITIES
442 W. WASHINGTON STREET
SUFFOLK, VA 23434

PUBLIC FACILITIES MANUAL VOLUME II

WASTEWATER PUMP STATION INSTRUMENTATION AND CONTROL

REVISIONS

NO.	DESCRIPTION	DATE

PUMP CONTROL PANEL PLC OUTPUT

Drawing No.

I-6CSF

Scale: NOT TO SCALE | 2017 RELEASE 1

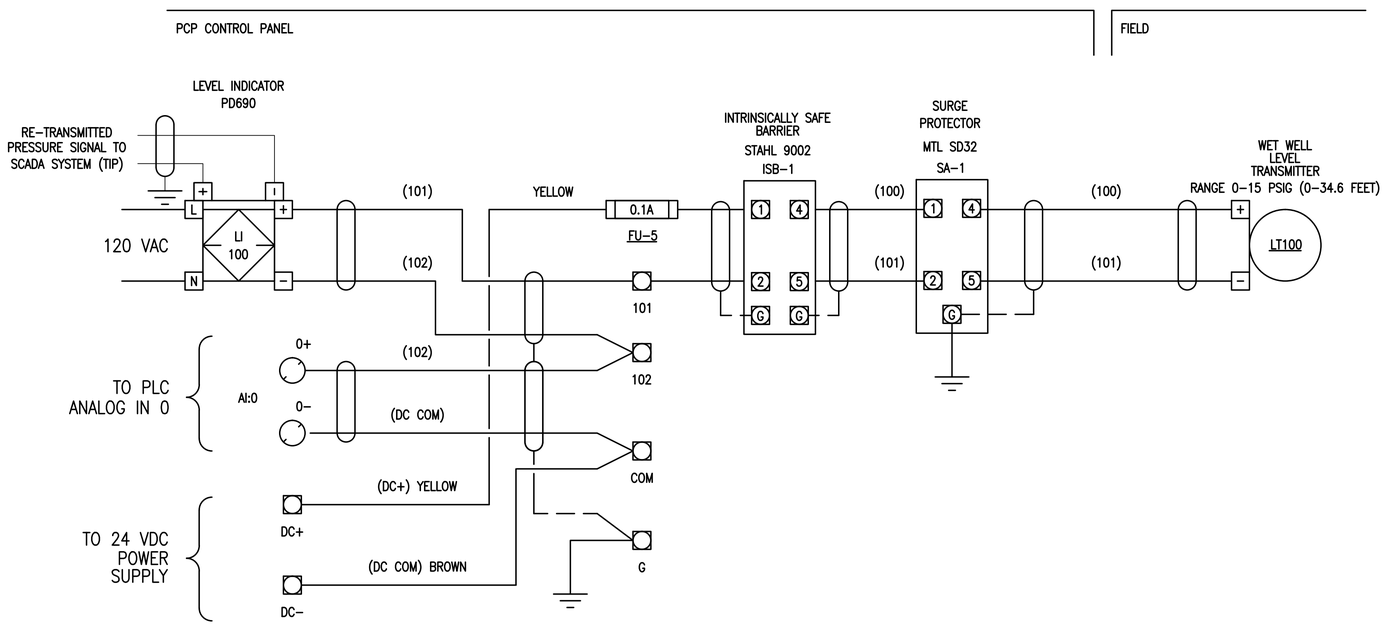

WET WELL LEVEL

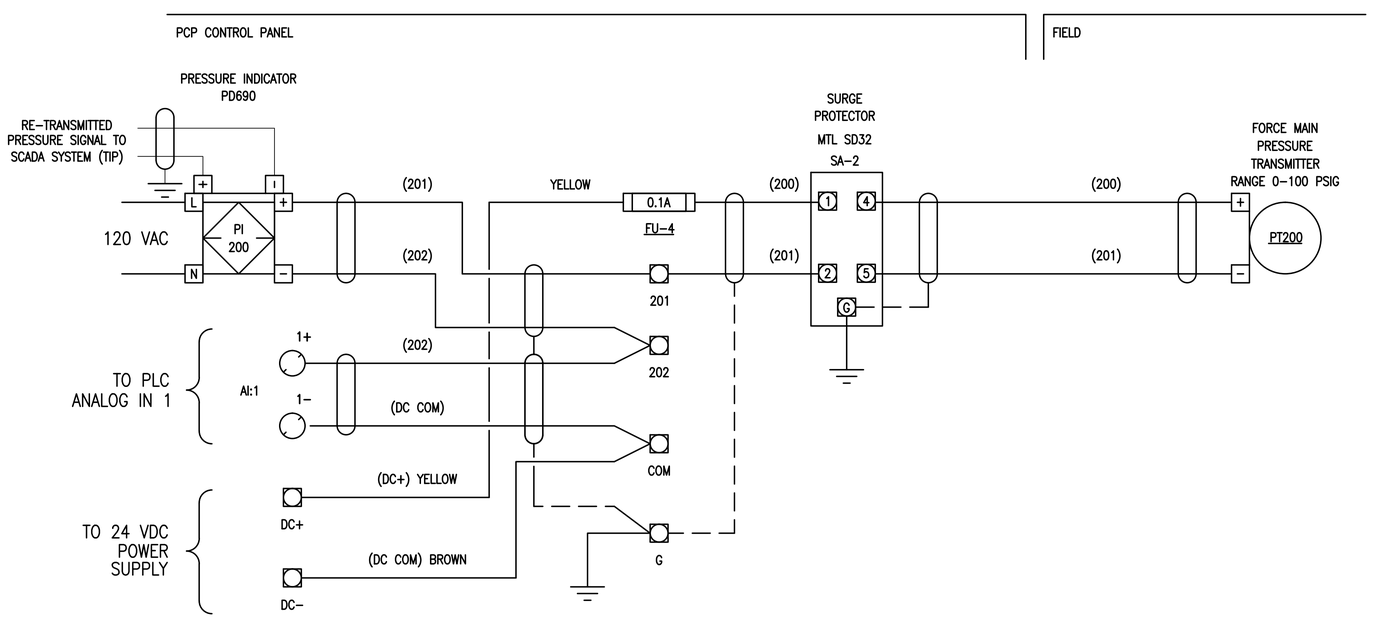

FORCE MAIN PRESSURE

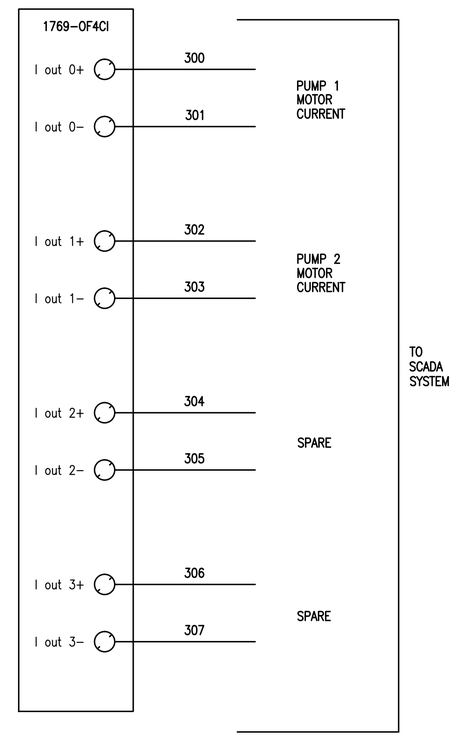

ANALOG SIGNALS TO SCADA SYSTEM

NANSEMOND 1646 SUFFOLK 1742
19 74
CITY of SUFFOLK, VIRGINIA

CITY OF SUFFOLK, VIRGINIA

DEPARTMENT OF PUBLIC UTILITIES
442 W. WASHINGTON STREET
SUFFOLK, VA 23434

PUBLIC FACILITIES MANUAL VOLUME II

WASTEWATER PUMP STATION INSTRUMENTATION AND CONTROL

REVISIONS

NO.	DESCRIPTION	DATE

PUMP CONTROL ANALOG LOOPS

Drawing No.

I-7CSF

Scale: NOT TO SCALE | 2017 RELEASE 1

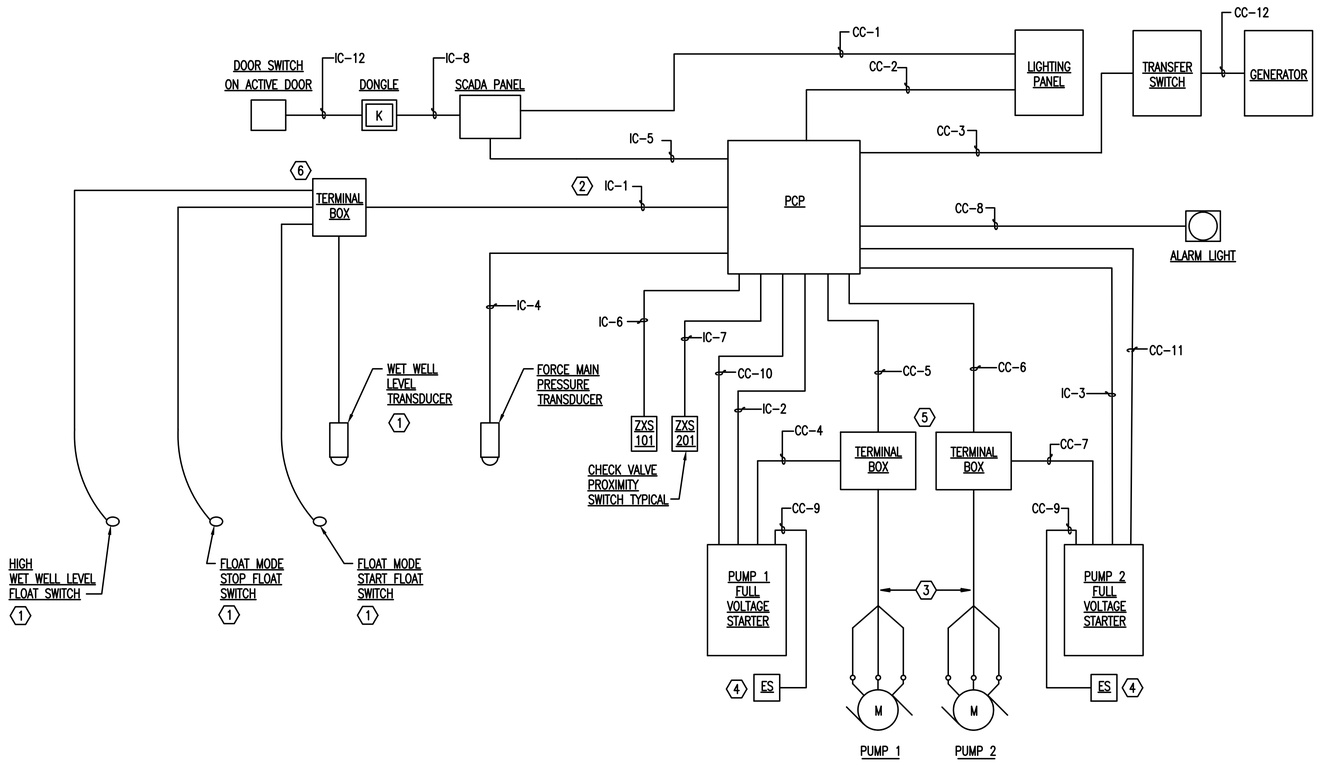

CONTROL SYSTEM RISER DIAGRAM

NOT TO SCALE

DRAWING NOTES

1. UNLESS OTHERWISE NOTED, ALL WORK SHOWN ARE NEW.
2. REFER TO ELECTRICAL DRAWINGS FOR LOCATIONS OF EQUIPMENT.

SPECIFIC NOTES

1. WET WELL DESIGNATED AS CLASS I, DIVISION 1 GROUP D HAZARDOUS LOCATION. LEVEL TRANSDUCER AND FLOAT SWITCHES SHALL BE WIRED AS AN INTRINSICALLY SAFE CIRCUITS.
2. CONDUIT SHALL BE LABELED PER NEC "INTRINSICALLY SAFE WIRING".
3. PUMP CABLES FOR POWER, SEAL MONITOR AND OVER TEMPERATURE CUTOUT. MAY BE TWO CABLES.
4. EMERGENCY STOP PUSH BUTTON MOUNTED ON WALL NEAR PUMP IN DRY WELL (PROVIDED IF STATION HAS DRYWELL).
5. FOR WET PIT DRY PIT PUMP STATIONS SPLICE BOXES MAY NOT BE REQUIRED. COORDINATE WITH PUMP MANUFACTURE WHETHER POWER CABLE AND MONITORING WIRING ARE ONE OR TWO CABLES. ON STATIONS WHERE SPLICE BOXES ARE NOT USED WIRE DIRECT TO STARTER THROUGH CC-4 AND CC-7. PUMP SEAL MONITOR AND OVER TEMPERATURE SENSORS ARE WIRED TO PUMP CONTROL PANEL FOR MONITORING AND ALARM. MOVE CC-5 AND CC-6 ACCORDINGLY.
6. SEE SHEET I-12CSF FOR DETAILS.

CONDUIT AND CONDUCTOR SCHEDULE

CC-1	2#12, 1#12G-3/4" CONDUIT FROM LIGHTING PANEL TO SCADA PANEL.
CC-2	2#12, 1#12G-3/4" CONDUIT FROM LIGHTING PANEL TO PUMP CONTROL PANEL (PCP)
CC-3	12#14, 1#12G.-3/4" CONDUIT FOR UNDER VOLTAGE MONITOR STATUS, ATS POSITION, GENERATOR RUN AND GENERATOR FAIL TO PCP. (2#14 SPARE CONDUCTORS)
CC-4	SEE ELECTRICAL DRAWINGS FOR CONDUIT SIZE, WIRE SIZE AND CONDUIT NUMBERING. CONDUIT NUMBERING.
CC-5	6#14, 1#12G.-3/4" CONDUIT (2#14 SPARE CONDUCTOR INCLUDED). ACTIVE CONDUCTORS FOR PUMP 1 SEAL FAIL SENSOR AND PUMP OVER TEMPERATURE SENSORS.
CC-6	6#14, 1#12G.-3/4" CONDUIT (2#14 SPARE CONDUCTOR INCLUDED). ACTIVE CONDUCTORS FOR PUMP 2 SEAL FAIL SENSOR AND PUMP OVER TEMPERATURE SENSORS.
CC-7	SEE ELECTRICAL DRAWINGS FOR CONDUIT SIZE, WIRE SIZE AND CONDUIT NUMBERING.
CC-8	2#12, 1#12G-3/4" CONDUIT FROM PCP TO ALARM LIGHT.
CC-9	2#12, 1#12G-3/4" CONDUIT FROM STARTERS TO EMERGENCY STOP STATION (ES).
CC-10	18#14, 1#12G.-3/4" CONDUIT (4#14 SPARE CONDUCTOR INCLUDED) FOR PUMP 1 START/STOP, RUN STATUS, OVERLOAD, CONTROL POWER LOCKOUT AND REMOTE POSITION.
CC-11	18#14, 1#12G.-3/4" CONDUIT (4#14 SPARE CONDUCTOR INCLUDED) FOR PUMP 2 START/STOP, RUN STATUS, OVERLOAD, CONTROL POWER LOCKOUT AND REMOTE POSITION.
CC-12	8#14, 1#16 FOR GENERATOR RUN STATUS, FAULT STATUS.
IC-1	6#14, 1#12G., 1-#16 TPS -1" CONDUIT FOR HIGH WET AND LOW WET WELL LEVEL FLOAT SWITCHES AND LEVEL TRANSMITTER - MARK CONDUIT INTRINSICALLY SAFE WIRING.
IC-2	1 CAT5E CABLES, 3/4" CONDUIT FOR ETHERNET COMMUNICATION FROM PCP ETHERNET SWITCH TO STARTER CURRENT MONITOR.
IC-3	1 CAT5E CABLES, 3/4" CONDUIT FOR ETHERNET COMMUNICATION CABLE FROM PCP ETHERNET SWITCH TO STARTER CURRENT MONITOR.
IC-4	1 #16 TPS. 3/4" CONDUIT FOR FORCE MAIN PRESSURE TRANSMITTER
IC-5	22#16, 1#12G AND 8 #16 TPS, 1-1/2" CONDUIT FOR ALARM SIGNALS FROM PCP TO SCADA PANEL (TELOG).
IC-6	2#12, 1#12G 3/4" CONDUIT FOR ALARM SIGNALS FROM CHECK VALVE TO PCP.
IC-7	2#12, 1#12G 3/4" CONDUIT FOR ALARM SIGNALS FROM CHECK VALVE TO PCP.
IC-8	1 BELDEN 9536 CABLE, 1#12G 3/4" CONDUIT FROM DONGLE TO SCADA PANEL.
IC-9	1 BELDEN 6660FT CABLE, 1/2" CONDUIT FROM DOOR SWITCH TO DONGLE. INSTALL CONDUIT FROM DONGLE TO LOCATION NEAR DOOR SWITCH. EXTEND CABLE TO SWITCH.

NANSEMOND 1646 SUFFOLK 1742
19 74
CITY of SUFFOLK, VIRGINIA

CITY OF SUFFOLK, VIRGINIA

DEPARTMENT OF PUBLIC UTILITIES
442 W. WASHINGTON STREET
SUFFOLK, VA 23434

PUBLIC FACILITIES MANUAL VOLUME II

WASTEWATER PUMP STATION INSTRUMENTATION AND CONTROL

REVISIONS

NO.	DESCRIPTION	DATE

PUMP STATION CONTROL SYSTEM CONDUIT RISER DIAGRAM AND SCHEDULE

Drawing No.

I-8CSF

Scale: NOT TO SCALE | 2017 RELEASE 1

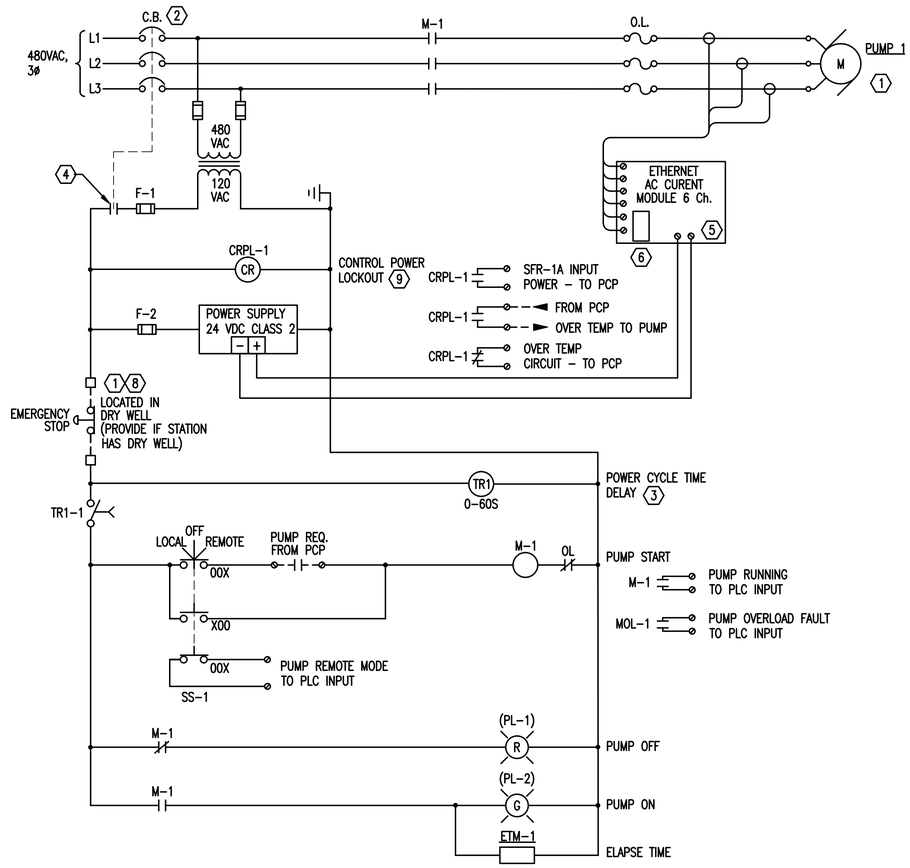

PUMP 1 FVNR ELEMENTARY

NOT TO SCALE

(TYPICAL FOR PUMP 2)

7 DIMENSIONS AND ELECTRICAL CONNECTIONS

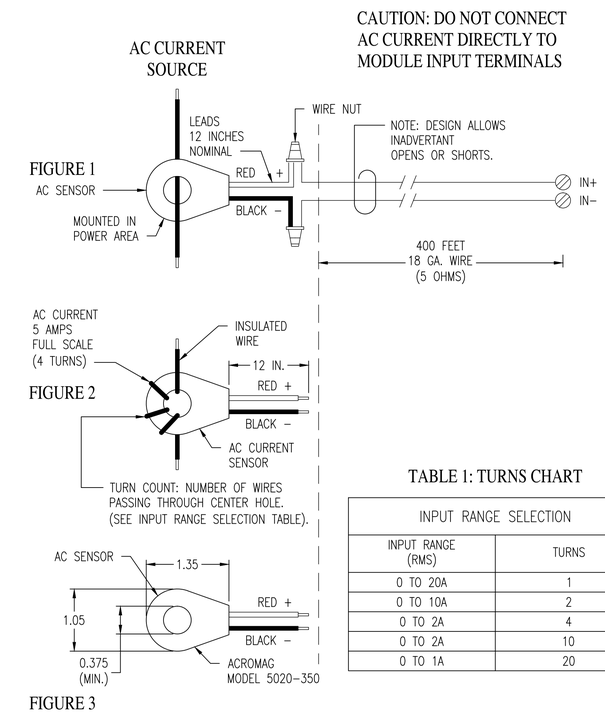

TABLE 1: TURNS CHART

INPUT RANGE SELECTION	
INPUT RANGE (RMS)	TURNS
0 TO 20A	1
0 TO 10A	2
0 TO 2A	4
0 TO 2A	10
0 TO 1A	20

THIS SENSOR IS USED WITH VARIOUS ACROMAG INPUT MODULES- PLEASE REFERENCE THE USER'S MANUAL FOR THE MODULE FOR ADDITIONAL INFORMATION

DRAWING NOTES

1. UNLESS OTHERWISE NOTED ALL ITEMS AND EQUIPMENT ARE NEW.
2. SHORT CIRCUIT CURRENT RATING OF STARTER ASSEMBLY SHALL BE 65KRMS AMPERES MIN.
3. ALL INDICATING LIGHTS SHALL BE LED PUSH TO TEST TYPE.
4. GROUND AND WIRE MOTOR PER NEC.

SPECIFIC NOTES

1. EQUIPMENT LOCATED REMOTE FROM COMBINATION STARTER ENCLOSURE.
2. MAIN CIRCUIT BREAKER TYPE COMBINATION MOTOR STARTER PROPERLY SIZED FOR MOTOR.
3. SET AT 10 SECOND DELAY FOR PUMP 1, 20 SECOND DELAY FOR PUMP 2.
4. AUXILIARY CONTACT CLOSES WHEN MAIN CIRCUIT BREAKER CLOSES.
5. PROVIDE ETHERNET AC PUMP CURRENT MONITOR PER SPECIFICATIONS TO MONITOR ALL THREE PHASES OF THE MOTOR. CONNECT ETHERNET CABLE TO ETHERNET SWITCH AND DISPLAY PUMP CURRENT ON OIT.
6. ETHERNET PORT.
7. COPIED WITH PERMISSION.
8. EMERGENCY STOP (ES) USED ONLY ON WET PIT DRY PIT STATIONS. MOUNT ON WALL NEAR PUMP.
9. RELAY SHALL BE CPRL-2 FOR PUMP 2

NANSEMOND 1646 SUFFOLK 1742 19 74 CITY of SUFFOLK, VIRGINIA

CITY OF SUFFOLK, VIRGINIA

DEPARTMENT OF PUBLIC UTILITIES
442 W. WASHINGTON STREET
SUFFOLK, VA 23434

PUBLIC FACILITIES MANUAL VOLUME II

WASTEWATER PUMP STATION INSTRUMENTATION AND CONTROL

REVISIONS

NO.	DESCRIPTION	DATE

FULL VOLTAGE STARTER ELEMENTARY DIAGRAM

Drawing No.

I-9CSF

Scale: NOT TO SCALE | 2017 RELEASE 1

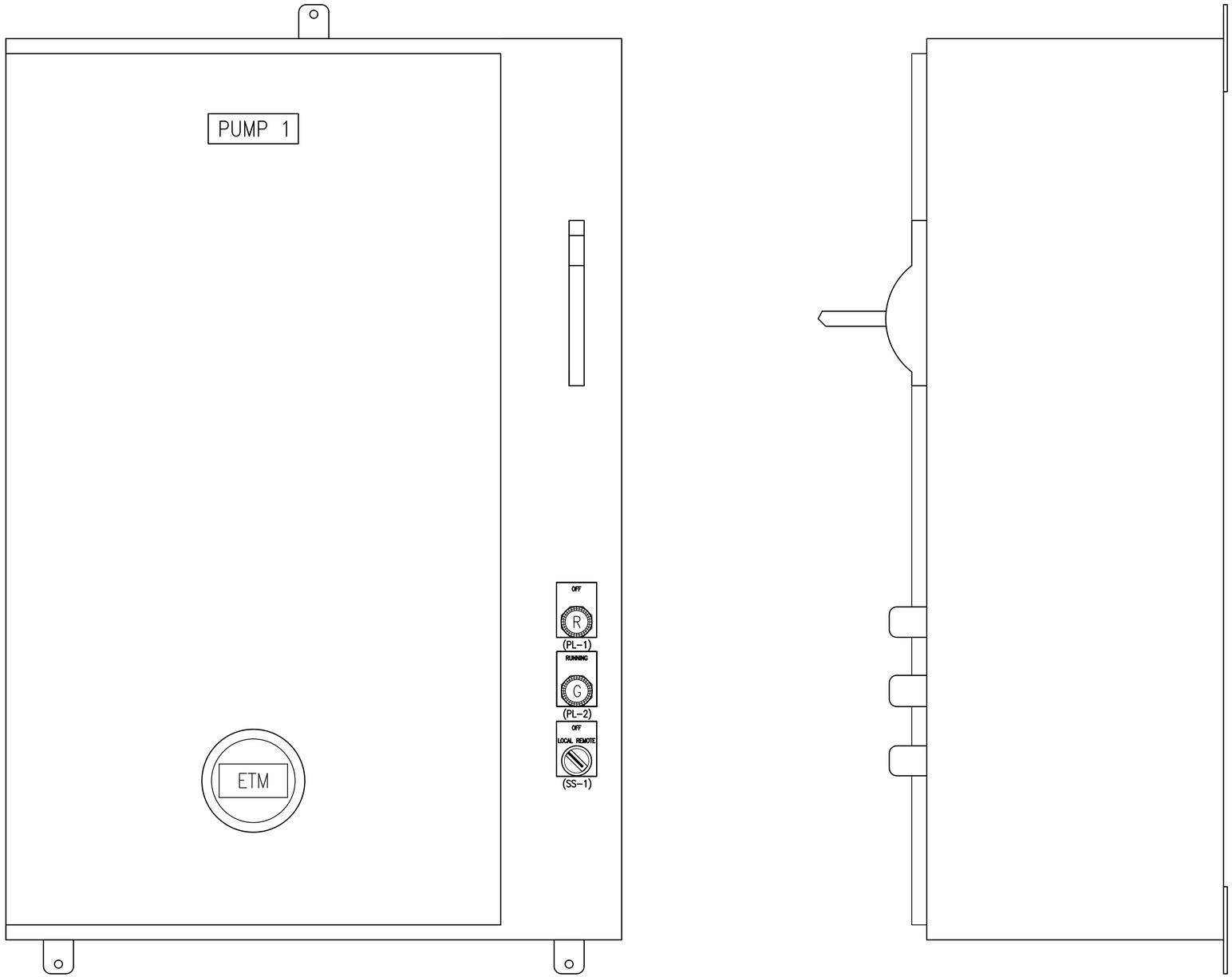

PUMP 1 FVNR ELEVATIONS

NOT TO SCALE

(TYPICAL FOR PUMP 2)

DRAWING NOTES

1. UNLESS OTHERWISE NOTED ALL ITEMS AND EQUIPMENT ARE NEW.
2. EQUIPMENT LOCATED REMOTE FROM PCP ENCLOSURE.
3. COMBINATION STARTER SIZE DEPENDANT ON MOTOR HORSEPOWER.
4. MAIN CIRCUIT BREAKER SIZE DEPENDANT ON MOTOR HORSEPOWER.
5. PROVIDE OVERSIZED ENCLOSURE TO HOUSE DEVICES AS REQUIRED.

NANSEMOND 1646 SUFFOLK 1742 19 74 CITY of SUFFOLK, VIRGINIA

CITY OF SUFFOLK, VIRGINIA

DEPARTMENT OF PUBLIC UTILITIES
442 W. WASHINGTON STREET
SUFFOLK, VA 23434

PUBLIC FACILITIES MANUAL VOLUME II

WASTEWATER PUMP STATION INSTRUMENTATION AND CONTROL

REVISIONS

NO.	DESCRIPTION	DATE

PUMP FULL VOLTAGE NON-REVERSING STARTER ELEVATIONS

Drawing No.

I-10CSF

Scale: NOT TO SCALE | 2017 RELEASE 1

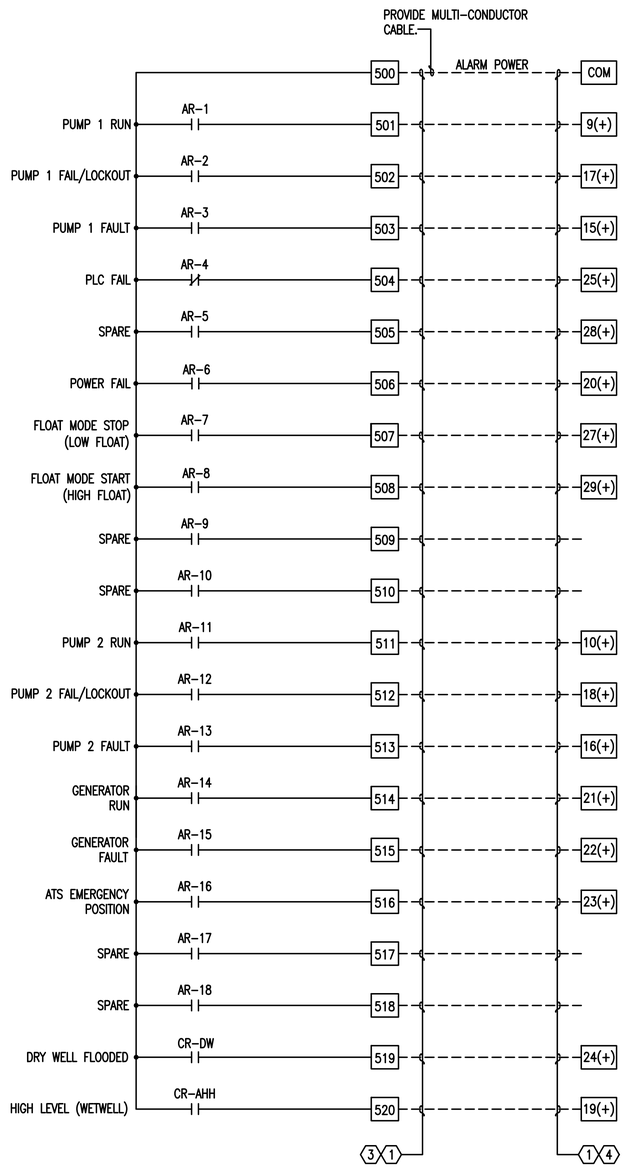

ALARM TERMINALS

NOT TO SCALE

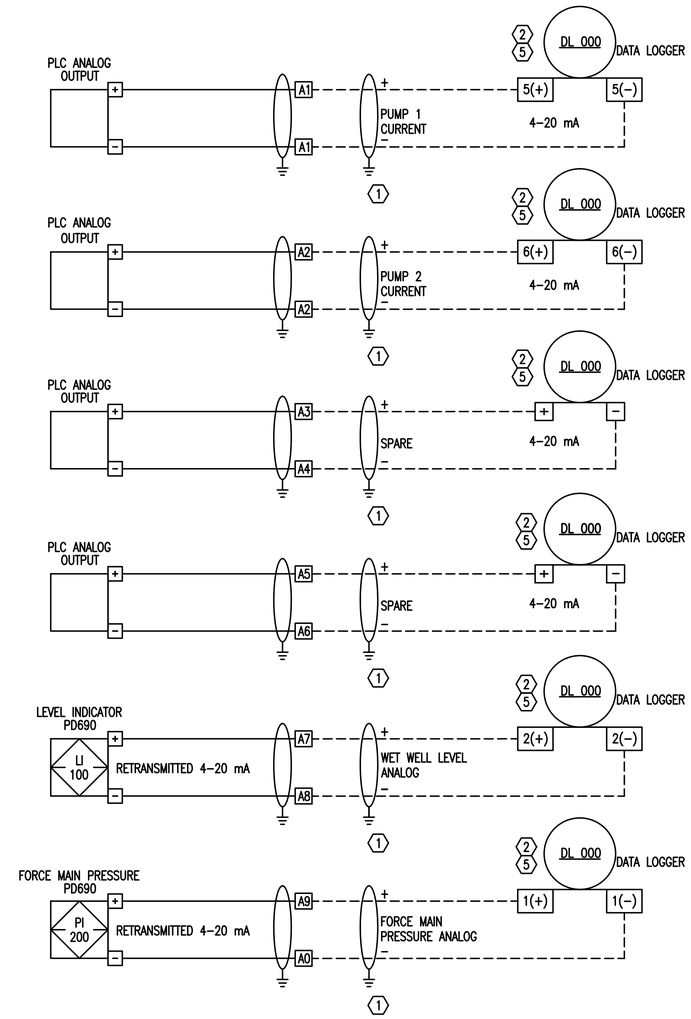

SPECIFIC NOTES

1. ALARM SIGNAL WIRING TO SCADA SYSTEM.
2. CONNECT SCADA SYSTEM TO PRESSURE AND LEVEL SIGNALS. VERIFY INPUT POINTS WITH CITY.
3. PUMP CONTROL PANEL TERMINATION POINTS.
4. SCADA SYSTEM TERMINATION POINTS.
5. SET SCADA SYSTEM SWITCH TO "CURRENT"

NANSEMOND 1646 SUFFOLK 1742 19 74 CITY of SUFFOLK, VIRGINIA

CITY OF SUFFOLK, VIRGINIA

DEPARTMENT OF PUBLIC UTILITIES
442 W. WASHINGTON STREET
SUFFOLK, VA 23434

PUBLIC FACILITIES MANUAL VOLUME II

WASTEWATER PUMP STATION INSTRUMENTATION AND CONTROL

REVISIONS

NO.	DESCRIPTION	DATE

PUMP CONTROL PANEL SCADA CONNECTIONS

Drawing No.

I-11CSF

Scale: NOT TO SCALE | 2017 RELEASE 1

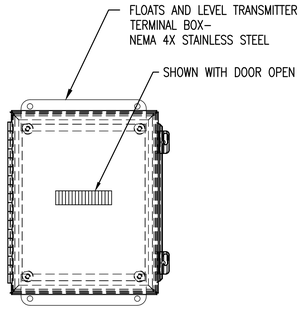

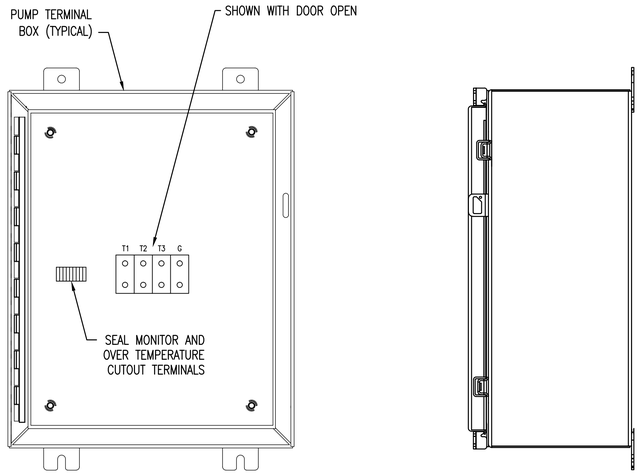

NOTE:
1. TERMINAL BOXES SHALL BE NEMA 4X STAINLESS STEEL.
2. MARK TERMINAL BOXES FOR PUMP SERVED.
3. PUMP TERMINAL BOXES NOT TYPICAL TO ALL SITES. REFER TO ELECTRICAL AND INSTRUMENTATION DWGS.

TERMINAL BLOCK LAYOUT
NOT TO SCALE

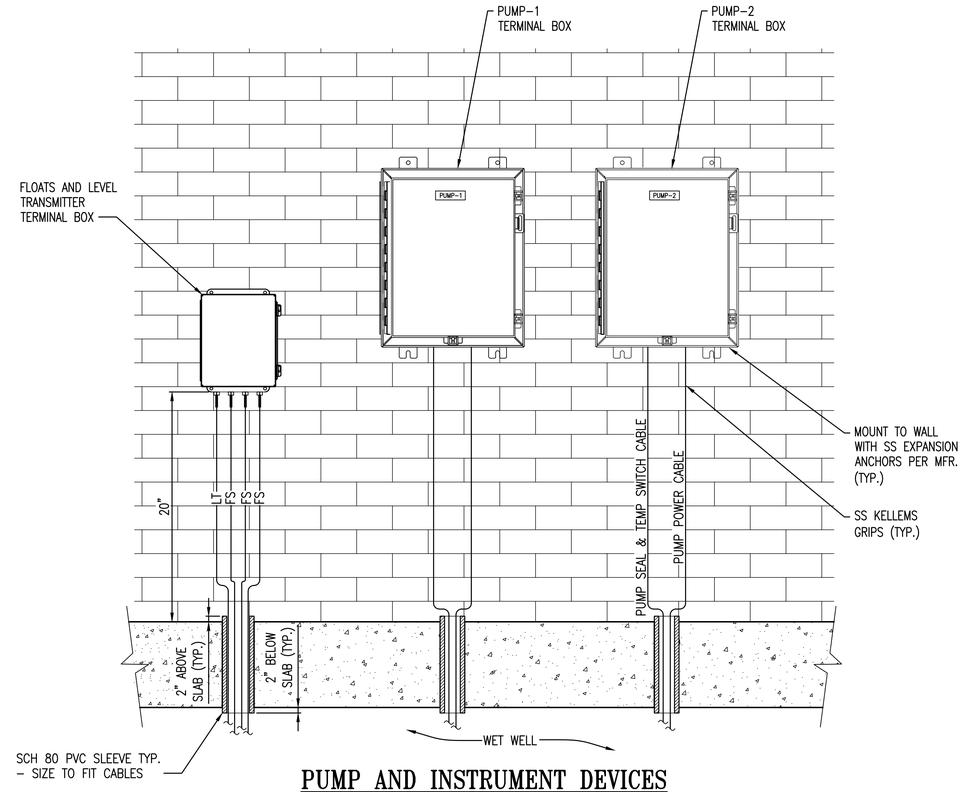

PUMP AND INSTRUMENT DEVICES TERMINAL BOX ELEVATION
NOT TO SCALE

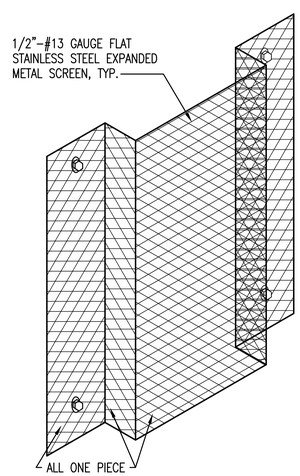

PROTECTIVE METAL SCREEN ENCLOSURE
NOT TO SCALE

DRAWING NOTES:
1. LAYOUT OF EQUIPMENT MAY VARY PER SITE. SOME SITES MAY NOT INCLUDE ALL EQUIPMENT SHOWN.
2. DIMENSIONS OF WIRE MESH ENCLOSURE SHALL DEPEND ON EQUIPMENT LAYOUT.

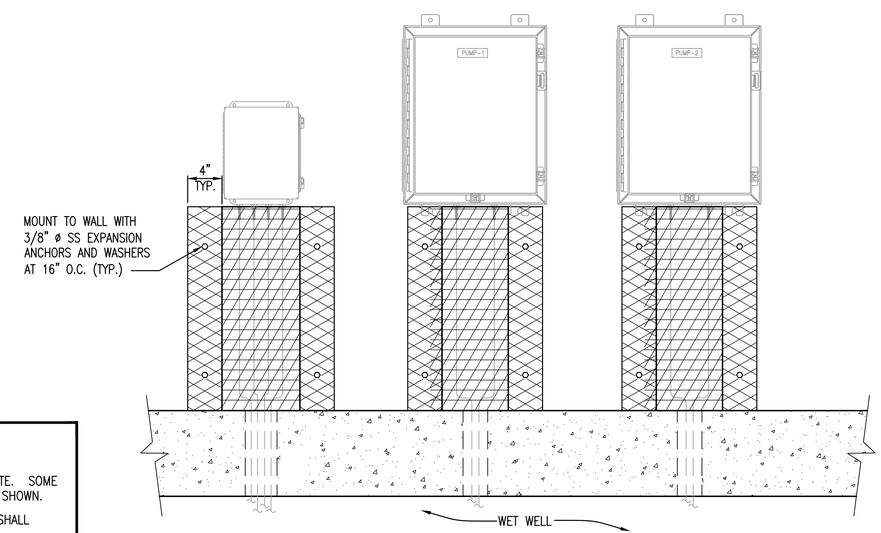

PROTECTIVE METAL SCREEN – ELEVATION
NOT TO SCALE

NANSEMOND 1646 SUFFOLK 1742 19 74 CITY of SUFFOLK, VIRGINIA

CITY OF SUFFOLK, VIRGINIA
DEPARTMENT OF PUBLIC UTILITIES
442 W. WASHINGTON STREET
SUFFOLK, VA 23434

PUBLIC FACILITIES MANUAL VOLUME II

WASTEWATER PUMP STATION INSTRUMENTATION AND CONTROL

REVISIONS

NO.	DESCRIPTION	DATE

TERMINAL BOX DETAILS

Drawing No.
I-12CSF

Scale: NOT TO SCALE | 2017 RELEASE 1

APPENDIX I

SOFT-START DRIVE

SPECIFICATIONS AND DRAWINGS

This page intentionally left blank.

APPENDIX I

SOFT-START DRIVE SPECIFICATIONS

This page intentionally left blank.

SECTION 01301

CS-SS STATION SUBMITTALS

PART 1 - GENERAL

1.01 GENERAL

A. These Constant Speed Soft Start (CS-SS) specifications are intended to be used for wastewater pump stations fifteen (15) horsepower and greater in the City of Suffolk, Virginia.

B. Terms used or referred to herein are defined in Chapter 2 of the City of Suffolk Public Facilities Manual (PFM), Volume II. The term "Engineer" shall be the "Engineer of Record", the term "City" shall be the "City of Suffolk, Virginia" and the term "Department" shall be the "City of Suffolk Department of Public Utilities".

C. Prior to beginning the submittals review process, the Engineer shall provide the Contractor and the Department a complete list of submittals required.

D. The Contractor shall submit to the Engineer and the Department for review and approval such submittals as are required for the proper control of work, including but not limited to those submittals in the Engineer's list, specified elsewhere in the Specifications, on the Project Drawings and in the PFM.

E. The Engineer shall maintain a complete updated submittal log and shall make the log available to the Contractor and the Department as requested. This log shall include the following items:

1. Submittal-Description and Number assigned.
2. Date to Engineer.
3. Date returned to Contractor (from Engineer).
4. Status of Submittal (Approved, Approved as Noted, Revise and Return, Rejected).
5. Date of Resubmittal and Return (as applicable).
6. Date material release (for fabrication).
7. Projected date of fabrication.
8. Projected date of delivery to site.
9. Status of O&M manuals submittal.
10. Specification Section.
11. Drawings Sheet Number.

1.02 TYPES OF SUBMITTALS

A. Shop drawings for manufactured or fabricated items, pipe layout or other schedules, diagrams and like material prepared specially for this project.

B. Product Data which include pre-printed material, manufacturer's descriptive literature, illustrations, catalog data, performance charts and the like intended to identify a part of the work but not necessarily prepared exclusively for this Project.

C. Samples which include physical examples of products, materials, assemblies or workmanship which are identical to a portion of the work and which establish standards for materials, workmanship, or appearance of the finished work.

D. Administrative data to include information required to support the administrative requirements of the Project as called for in the specifications.

E. Factory Acceptance Test (FAT) certification, Pre-Site Acceptance Test (Pre-SAT) results, and Site Acceptance Test (SAT) results. See Section 13011 for description of the FAT, Pre-SAT and SAT.

1.03 PROCEDURE FOR SUBMITTALS

A. Except where specifically stated otherwise all submittals shall be made to the Engineer for his approval. Submittals of all but administrative data shall be made in at least eight (8) copies. The Engineer shall provide to the Department two (2) copies for its review. The Department shall return one copy to the Engineer with the Department’s comments. Prior to approval of the submittals, the Engineer shall reconcile the Department’s comments. Two (2) copies of the submittal shall be retained by the Engineer and the other copies returned to the Contractor. Two (2) copies of all approved submittals shall be promptly provided to the Department. Submittals shall be complete for each component of work or system and shall include all inter-related portions of a system. At the completion of the project, the Engineer shall supply the Department with two (2) complete sets of all approved submittals as Record Copy.

B. Administrative data shall be submitted in triplicate (3 copies).

C. Electronic copies of submittals may be made in lieu of paper submittals. Record Copy shall be on CD and two (2) hard copies.

1.04 CONTRACTOR'S RESPONSIBILITY

A. It is the duty of the Contractor to check all submittals prepared by or for him before submitting them to the Engineer for review. Each and every copy of the submittals shall bear the Contractor's stamp showing that they have been checked. Submittals

submitted to the Engineer without the Contractor's stamp shall be returned to the Contractor for conformance with this requirement. Submittals shall indicate any deviations in the submittal from requirements of the Project Documents.

B. The Project Drawings shall not be reproduced for the purpose of making submittals.

C. Determine and verify:

1. Field measurements.
2. Field construction criteria.
3. Catalog numbers and similar data.
4. Conformance with Specifications.

D. The Contractor shall furnish the Engineer a schedule of submittals fixing the respective dates of their submission, the beginning of manufacture, testing and installation of materials, supplies and equipment. This schedule shall indicate those submittals that are critical to the progress schedule.

E. The Contractor shall ensure that no work is begun on any item of work requiring an approved submittal until such approval is obtained.

F. The Contractor shall not begin any of the work covered by a drawing, data, or a sample returned marked "REVISE AND RETURN" OR "REJECTED" until a revision or correction thereof has been reviewed and returned to him, by the Engineer, with approval.

G. One approved copy of all submittals shall be held by the Contractor at the construction site.

H. Each submittal shall be assigned a sequential number by the Contractor, for purposes of easy identification, and shall retain its assigned number with appropriate subscript, on required resubmissions. The assigned number shall consist of the specification section number where the item is specified, followed by a sequential number indicating the number of submittals in that Section (e.g., 03300-11 is the 11th separate submittal for items specified in Section 03300). Resubmittals shall be identified with the same number as the original submittal, followed by the subscript R1, R2, etc. All products and materials submitted shall be clearly identified with the appropriate equipment name and number as it appears in the Project Documents.

I. The Contractor shall submit to the Engineer all drawings and schedules sufficiently in advance of construction requirements. The Engineer will endeavor to provide a written response within 14 calendar days from receipt of submittals.

J. All submittals shall be accompanied with a transmittal letter prepared in duplicate containing the following information:

1. Date.
2. Project Title and Number.
3. Contractor's name and address.
4. The Number of each Shop Drawing, Project Data, and Sample submitted.
5. Notification of Deviations from Project Documents.
6. Submittal Log Number conforming to Specification Section Numbers.

K. The Contractor shall be responsible for and bear all costs which may result from the ordering of any material or from proceeding with any part of work prior to the receipt of the approved submittals.

L. The Contractor shall be fully responsible for observing the need for and making any changes in the arrangement of piping, connections, wiring, manner of installation, etc., which may be required by the materials/equipment he proposed to supply both as pertains to his work and any work affected under other parts, heading, or divisions of drawings and specifications at no cost to the Owner.

1.05 ENGINEER REVIEW OF SUBMITTALS

A. The Engineer review of submittals will be only for conformance with the design concept of the Project and for general compliance with the information given in the Project Documents. The Engineer review and approval will not constitute an approval of dimensions, quantities, and details of the material, equipment, device, or item shown.

B. The review of submittals will be general, and shall not be construed:

1. as permitting any departure from the Project requirements;
2. as relieving the Contractor of responsibility for any errors, including details, dimensions, and materials;
3. as approving departures from details furnished by the Engineer, except as otherwise provided herein.
4. as approving Contractor's means, methods, techniques, sequences or procedures of construction or to safety precautions or programs incident thereto.

C. When reviewed by the Engineer, each of the submittals will be identified as having received such review being so stamped and dated. Submittals stamped "REVISE AND RESUBMIT" and with required corrections shown will be returned to the Contractor for correction and resubmittal.

D. Resubmittals will be handled in the same manner as first submittals. On resubmittals the Contractor shall direct specific attention, in writing or on resubmitted submittals,

to revisions other than the corrections requested by the Engineer on previous submissions. The Contractor shall make any corrections required by the Engineer.

E. If the Contractor considers any correction indicated on the drawings to constitute a change to the Project Drawings or Specifications, the Contractor shall give written notice thereof to the Engineer.

F. When the submittals have been completed to the satisfaction of the Engineer and the Department, the Contractor shall carry out the construction in accordance therewith and shall make no further changes therein except upon written instructions from the Engineer and the Department.

G. No partial submittals will be reviewed. Partial submittals will be returned rejected unless otherwise agreed. Unless otherwise specifically permitted by the Engineer, make all submittals in groups containing all associated items for:

1. Systems
2. Processes
3. As indicated in specific specification sections.

1.06 SUBMITTALS

A. When used in the Project Documents, the term "Submittals" shall be all drawings, diagrams, illustrations, schedules and other data which are specifically prepared by or for Contractor to illustrate some portion of the Work and all illustrations, brochures, standard schedules, performance charts, instructions, diagrams, and other information prepared by a Supplier and submitted by Contractor to illustrate material or equipment for some portion of the Work.

B. Manufacturer's catalog sheets, brochures, diagrams, illustrations and other standard descriptive data shall be clearly marked to identify pertinent materials, product or models. Delete information which is not applicable to the Work by striking or cross-hatching.

C. Submittals shall be checked and coordinated with the work of all trades involved, before they are submitted for review by the Engineer and shall bear the Contractor's stamp of approval as evidence of such checking and coordination. Submittals provided without this stamp of approval shall be returned to the Contractor for resubmission.

D. Each Drawing shall have a blank area 3-1/2 inches by 3-1/2 inches, located adjacent to the title block for the shop drawing approval stamp. The title block shall display the following:

1. Project Title and Number

2. Name of project building or structure
3. Number and title of the shop drawing
4. Date of shop drawing or revision
5. Name of contractor and subcontractor submitting drawing
6. Supplier/manufacturer.
7. Separate detailer when pertinent
8. Specification title and number
9. Specification section
10. Project Drawing Number

E. If submittals show variations from project requirements because of standard shop practice or for other reasons, the CONTRACTOR SHALL DESCRIBE SUCH VARIATIONS IN HIS LETTER OF TRANSMITTAL. The transmittal letter shall delineate compliance and exceptions taken to Specifications and Project Drawings. If acceptable, proper adjustment in the project shall be implemented where appropriate. If the Contractor fails to describe such variations, he shall not be relieved of the responsibility for executing the work in accordance with the Specifications and Project Drawings.

F. Data on materials and equipment include, without limitation, materials and equipment lists, catalog data sheets, cuts, performance curves, diagrams, materials of construction and similar descriptive material. Materials and equipment lists shall give, for each item thereon, the name and location of the supplier or manufacturer, trade name, catalog reference, size, finish and all other pertinent data.

G. For all mechanical and electrical equipment furnished, the Contractor shall provide a list including the equipment name, and address and telephone number of the manufacturer's representative and Service Company so that service and/or spare parts can be readily obtained.

H. Should the Contractor propose exceptions to specified equipment or products, they shall submit an installation list to the Engineer along with the required shop drawings. The installation list shall include at least five installations where identical equipment has been installed and has been in operation for a period of at least three (3) years. Substitution requests shall conform to the requirements of Chapter 4.6 of this PFM.

I. Only the Engineer and the Department will utilize the color "red" in marking submittals.

J. Before Startup can be scheduled, the Contractor shall furnish to Engineer one (1) set of approved submittals, complete and up to date showing the permanent construction as actually made for all reinforcing and structural steel, miscellaneous metals, process and mechanical equipment, yard piping, electrical system and instrumentation system, for provision to the Department.

1.07 SAMPLES

A. The Contractor shall furnish, for the approval of the Engineer, samples as required by the project documents or requested by the Engineer. Samples shall be delivered to the Engineer as specified or directed. The Contractor shall prepay all shipping charges on samples. Materials or equipment for which samples are required shall not be used in work unless approved by the Engineer.

B. Samples shall be sufficient size and quantity to clearly illustrate:

1. Functional characteristics of the product, with integrally related parts and attachment devices.
2. Full range of color, texture and pattern.
3. A minimum of three samples of each item shall be submitted.

C. Each sample shall have a label indicating:

1. Name of project
2. Name of Contractor and Subcontractor
3. Material or Equipment Represented
4. Place of Origin
5. Name of Producer and Brand (if any)
6. Location of Project

(Samples of finished materials shall have additional marking that will identify them under the finished schedules).

D. The Contractor shall prepare a transmittal letter in triplicate for each shipment of samples containing the information required in paragraph 1.04 above. He shall enclose a copy of this letter with the shipment and send a copy of this letter to the Engineer. Approval of a sample shall be only for the characteristics or use named in such approval and shall not be constructed to change or modify any project requirements.

1.08 MANUFACTURER'S LIST

A. Within 30 days after receipt of a Notice to Proceed, and before ordering any equipment or materials, the Contractor shall submit to the Engineer (and the Department) for approval a complete list of proposed manufacturers and fabricators for all materials and equipment to be used in this Project. The purpose of this submittal is to allow the Engineer and the Department to predetermine the

acceptability of proposed suppliers before issuance of purchase orders by the Contractor. Submission and acceptance of the manufacturers' list shall neither relieve the Contractor from submitting detailed shop drawings and product data for all materials and equipment nor shall it constitute prior acceptance of any specific item of equipment prior to submittal of shop drawings. After submission and acceptance of the manufacturers' list, the Contractor shall not deviate from the named suppliers and manufacturers without written approval from the Engineer and the Department.

1.09 OPERATING AND MAINTENANCE INSTRUCTIONAL PERIODS

A. Particular sections of the Specifications require that the Contractor furnish qualified personnel to instruct the Owner's personnel in the proper operation and maintenance of equipment and systems provided in this project. Such instructional periods shall be for the duration of time specified and in accordance with the requirements of the individual sections of the Specifications and with the following paragraphs.

1.10 OPERATION AND MAINTENANCE MANUALS FOR EQUIPMENT AND PRODUCTS

A. General:

1. The Contractor shall furnish for the Engineer’s review three (3) Operation and Maintenance Manual draft copies, one copy of which shall be provided to the Department for review and comment. The Engineer shall reconcile the Department’s comments with his comments prior to approval. The final manual shall be approved by the Engineer and the Department.

2. The Contractor shall furnish to the Engineer (for the Department’s use) at least two weeks prior to startup, three (3) copies of the approved Operation and Maintenance Manual.

B. Operations and Maintenance Manual Preparation:

1. Manuals shall include operation and maintenance information on all systems and items of equipment. The data shall consist of: catalogs, brochures, bulletins, charts, schedules, approved submittals corrected to as-built conditions and assembly drawings describing location, operation, maintenance, lubrication, operating weight, and other information necessary for the Owner to establish an effective operating maintenance program. The following data shall also be included:

a. Title page giving name and location of facility, project drawings numbers, where shown and Specification Section where described.

b. Approved submittals of each piece of equipment.

c. Manufacturer's cuts and dimension drawings of each piece of equipment and details of all replacement parts.

d. Manufacturer's erection, operation and lubrication instructions for all equipment and apparatus, and complete listing of nameplate data.

e. Complete piping and interconnecting drawings.

f. Complete parts list with parts assembly drawing (preferably by exploded view), names and addresses of spare parts suppliers, recommended list of spare parts to be kept "in stock" and sample order forms for ordering spare parts. Lead time required for ordering parts shall be estimated.

g. Instructions with easily understood schematics or diagrams for disassembling and assembling the equipment for overhaul or repair.

h. The Contractor shall complete the three Forms A, B and C entitled “Equipment Registration, Parts List, and Maintenance Procedures Sheet” for each piece of equipment furnished under the project. These forms shall be included in the Operations and Maintenance Manual at the proper place. Example Forms A, B and C are included at the end of this Section.

2. All items listed above that are of a sheet size of 8-1/2 inches by 11 inches or can be folded (no more than twice) to this size shall be bound in 2-inch maximum loose-leaf three-ring d-post type binders with clear plastic-pouch covers. The contents shall be fully indexed. All sheets shall have reinforced holes.

3. Submittal drawings 24 inches by 36 inches in size shall be folded to approximately 12 inches by 9 inches with drawing title box exposed along either edge. Submittal drawings descriptive of a single item of equipment shall be grouped together. All submittal drawings shall be placed in accordion-type folders and fully indexed on the outside of the folders in a neat and uniform manner.

4. All submittal drawings included in the binders and/or folders shall be those copies previously submitted for review and approval and shall bear the Engineer stamp of approval and comments as originally noted thereon.

C. Approval:

1. Subsequent to the Engineer of Record approval, the Contractor shall submit two complete sets of manuals, one paper and one searchable pdf, to the Engineer.

2. Startup will not be undertaken until approved Operation and Maintenance Manuals have been submitted.

3. Partial approvals of the final manual will not be made.

1.11 MANUFACTURER'S CERTIFICATES

A. General:

1. As specified in the various sections of these Specifications and herein, the Contractor shall furnish the Engineer with manufacturer's certificates stating that the equipment and products have been installed under either the continuous or periodic supervision of the manufacturer's field representative, that they have been adjusted and initially operated in the presence of the manufacturer's field representative, and that they are operating in accordance with the specified requirements, to the manufacturer's satisfaction. A copy of all manufacturers' certificates shall be bound in each Operation and Maintenance Manual.

2. A certificate submitted for equipment, a product, or component of a product, shall indicate test results proving that the equipment, product, or component of a product, meet the requirements of the project documents. An affidavit consisting of a statement by an official of the company manufacturing the equipment or product indicating that the information on the certificate is true and accurate shall accompany the certificate.

3. A statement originating from the Contractor, or any of his subcontractors, suppliers, or any other agent which merely indicates that a particular item of equipment, product, or component of a product, meets the requirements of the Project Documents shall not be considered a certificate. Any such submittal made in this manner will not be approved and the corresponding equipment, product, or component of a product, shall not be finally accepted.

4. Manufacturers' certificate shall be provided as required in individual sections.

B. Manufacturer's Representative:

1. The definition of "manufacturer's representative" shall be as follows: a representative from the manufacturer's plant, familiar with the actual problems of manufacturing, installing and operating the particular equipment or product and with enough years of experience in this field to determine the successful operation of the equipment or product.

2. As related to his obtaining the manufacturer's certificates, the Contractor shall include in this Project price the cost of furnishing competent and experienced manufacturer's representatives who shall represent the manufacturer on equipment and products furnished and installed under this project, to assist the Contractor to install, adjust, start up, and test the equipment and products in conformity with the Project Documents. After the equipment and products have been operated through the trial period for each phase of construction and before being put into permanent service the manufacturer's representatives shall make all adjustments and tests required to provide that such equipment and products are in proper and satisfactory working order. This shall be performed prior to and separate from operational instruction.

C. Engineer's Responsibility

The Engineer will review with reasonable promptness all submittals with respect to the Project Documents and will indicate: Approved; Approved as Noted - No Resubmittal Required; Revise and Resubmit; or Rejected. The Engineer will return all submittals found incomplete stamped Rejected without a review.

1.12 DESIGN CALCULATIONS

Design calculations shall be presented in a neat, legible manner and shall bear the stamp and signature of a registered professional engineer, registered in the State of Virginia.

1.13 RECORD DRAWINGS

The Contractor will keep one copy of all Specifications, Drawings, Addenda, Change Orders and approved submittals at the site, in good order and annotated to show all changes made during the construction process. These shall be available to the Engineer and the Department and shall be delivered to the Department in both hard copy and digital (PDF) format upon completion of the project. Record drawings shall be prepared in accordance with Appendix E – Record Drawings of the PFM.

PART 2 – PRODUCTS

Not Used

PART 3 – EXECUTION

Not Used

FORM A - EQUIPMENT REGISTRATION

EQUIPMENT NAME: NUMBER: LOCATION:

MANUFACTURER: TELEPHONE:

ADDRESS:

SALES REPRESENTATIVE: TELEPHONE:

MANUFACTURER'S MANUAL NUMBER:

NAME PLATE DATA: MOTOR DATA:

ADDITIONAL EQUIPMENT DATA: ADDITIONAL MOTOR DATA:

PROJECT NO: DRAWING NOS:

SPECIFICATION SECTION:

FORM B - PARTS LIST

NAME OF PART: MANUFACTURER: CAT. NO.:

LOCAL SUPPLIER:

FORM C- MAINTENANCE PROCEDURES SHEET

EQUIPMENT NAME: _____ CRAFT: _____

PLANT AREA: _____ LEVEL: _____ LOCATION: _____

MAINTENANCE DESCRIPTION: _____ FREQUENCY: _____

SAFETY PRECAUTIONS: _____

TOOLS, PARTS, MATERIALS TEST EQUIPMENT: _____

(Separate sheet shall be filled out for each preventive maintenance procedure recommended by manufacturer, for each piece of equipment.)

END OF SECTION

This page intentionally left blank.

SECTION 13011

CS-SS STATION CONTROL SYSTEMS INTEGRATOR

PART 1 - GENERAL

1.01 SUMMARY

A. These Constant Speed Soft Start (CS-SS) specifications are intended to be used for wastewater pump stations fifteen (15) horsepower and greater in the City of Suffolk, Virginia.

B. This section includes the requirements for the Contractor to obtain the services of **one** Instrumentation and Controls Subcontractor who shall be responsible for the coordination and integration of the instrumentation and control systems. This Subcontractor shall be referred to as the Control Systems Integrator (CSI). The CSI shall have total responsibility for the detailed design, procurement, fabrication, configuration, testing, installation, start-up and implementation of the pump station instrumentation and control system including control panels, instrumentation and electrical motor control equipment as specified herein. Also included is the furnishing, installation and testing of the SCADA system. **Single source responsibility is required.**

C. The CSI shall furnish all instrumentation and controls specified unless otherwise noted.

D. It is the Contractor's and the CSI's responsibility to Perform all testing, startup and demonstration efforts. It is the Engineer of Record's (EOR) responsibility to Coordinate and Oversee the startup and demonstration. The City and its Consultants are only obligated to Witness these activities.

E. Although specification references are made herein, other specification Sections may be referenced from those Sections. It shall be the Contractor's and the CSI's responsibility to obtain and follow applicable specification Sections for this project.

1.02 ABBREVIATIONS

CSI	Control Systems Integrator
FAT	Factory Acceptance Test
OIT	Operator Interface Terminal
I&C	Instrumentation and Control
I/O	Input / Output
PLC	Programmable Logic Controller
PCP	Pump Control Panel

Pre-SAT	Preliminary Site Acceptance Test
SAT	Site Acceptance Test
SCADA	Supervisory Control and Data Acquisition

1.03 CSI REQUIREMENTS AND RESPONSIBILITIES

A. The intent of this section is to provide integration, installation and testing standards for the PLC based Pump Control Panel and SCADA equipment. The wastewater pumping station will utilize software, PLC's and networking equipment to build a station control and SCADA system used to annunciate alarms, collect and archive station data.

B. The CSI shall furnish equipment, materials, software and appurtenances in accordance with the requirements of the Project technical specifications and drawings.

C. The CSI shall coordinate with equipment manufacturers to obtain information and submittals from manufacturers as required for the CSI to execute the work that the CSI is responsible for.

D. The CSI will be responsible for providing, installing, configuration, testing and startup of the Pump Control Panel and components including the PLC, OIT, networking equipment, instrumentation and SCADA System. The configuration programming will be the responsibility of the CSI to configure the PLC and OIT, to verify successful two-way data communication over the local network between the PLC and OIT.

E. The licensed programming software required for the configuration programming shall be the property of the CSI and shall be compatible with the City's current programming software standards and firmware version. The City's current PLC programming software is Allen Bradley, RSLogix 5000, and OIT programming software is FactoryTalk View ME. Contact the Department for the current required versions of these software packages.

F. Once installation and configuration programming is complete, the City of Suffolk designated Instrumentation and Control (I&C) Consultant will be responsible for programming the operation control logic in the PLC and the graphics in the OIT. Operational programming is limited to the station specific logic and graphics programming for the PLC and OIT. This programming will be done as an addition to the basic configuration files provided by the CSI.

G. Operational functions and programming detailed in this and other sections are for informational purposes only to provide a comprehensive picture of the nature and extent of the Pump Control and SCADA System.

H. Provide enclosures for the PCP and other panels as required by the Project Documents. Equip the enclosure with all components as shown on the Project Drawings.

I. Provide sufficient communication and configuration ports for the following purposes, as required to provide the specific functionality:

1. Ethernet Port for connection to the Soft Start Ethernet Module.
2. Ethernet Port for programming and configuration to the PLC and/or I/O devices as applicable.
3. Ethernet port for connection of the Human Machine Interface.

J. Provide the PCP with minimum of one additional spare Ethernet communications port.

K. Configure and connect field devices to the I/O points as described in Section 13345 Input/Outputs Points List and as shown on the drawings. Where I/O points are not used, label as spare and shall be wired to terminal blocks and as shown of the drawings.

L. Provide Operator Interface Terminal to graphically show levels, pressures, alarm, equipment status, and setpoints. The CSI shall demonstrate communications of the OIT to the PLC's. Graphical programming of the OIT displays shall be completed by the City's I&C Consultant.

1.04 QUALITY ASSURANCE

A. References

1. Materials and installation shall be in accordance with the latest revisions of the following codes, standards and specifications, except where more stringent requirements have been specified herein:

ANSI - American National Standards Institute
ASME - The American Society of Mechanical Engineers
ASTM - The American Society for Testing Materials
NEMA - National Electric Manufacturers Association
UL - Underwriters Laboratories, Inc.
ISA – Instrument Society of America
IEEE - Institute of Electrical and Electronic Engineers
NEC - National Electrical Code

B. Quality Control

1. All components shall be new and of the most current and proven design. All components shall be suitable for the intended application and shall be installed and wired in strict accordance with the manufacturer's requirements.

2. Control panels and their components shall be UL listed and labeled. UL Listing for Pump Control Panel (PCP) shall be UL-698A, for control panels with intrinsically safe circuits extending into hazardous areas. All control panels not having intrinsically safe circuits extending into hazardous areas shall be UL 508A Listed and labeled.

3. CSI

a. The CSI shall be regularly engaged in the business of instrumentation and controls and shall be responsible for the furnishing, coordination and the installation of the equipment and specified herein.

b. The CSI shall demonstrate the requisite resources of in-house staff, facilities and finances to complete the project in the schedule specified. These resources shall include personnel who are direct payroll employees of the CSI to engineer, design, implement, fabricate, stage, and test the entire integrated hardware and software system at the CSI's facilities. In-house personnel shall include all disciplines associated with system manufacture, fabrication, and integration to include but not be limited to engineering, drafting, analog and digital control systems and wiring design, construction, wiring, labeling, software configuration, programming, project management, quality control, and field engineering.

c. The CSI shall assign a specific person to be the CSI Project Manager for this project. The Project Manager shall be a direct employee of the CSI, shall be assigned to this specific project, and shall be skilled and experienced in project management, and in the type of work described herein. The Project Manager shall be assigned for the period of the Project. Should it become necessary to replace the CSI's project manager, the Contractor shall submit to the Department the credentials of the person assigned as their replacement.

d. The CSI shall maintain a UL listed fabrication shop located at the CSI facility for the assembly of the various control panels,

cabinets, consoles, instrument racks, enclosures, and wiring required for this project. This shop shall be available for inspection by the Engineer to observe quality control and workmanship. The CSI facilities shall include hardware and software owned by the CSI Subcontractor for development and support of any system software, and any testing and demonstration equipment to be utilized on the project.

e. Alternatively, UL Listing requirement may be done by an Underwriters Laboratory (UL) field representative in accordance with UL's Field Listing program.

1.05 SUBMITTALS

A. Submittals shall be in accordance with the provisions set forth in Section 01301 and Chapter 4.6 of the PFM.

B. Unless the CSI has been previously approved by the Department, submit a CSI qualifications package for the proposed CSI for this project. The qualifications package shall include the following information: Company Background, Experience in Municipal Wastewater Pumping Station Applications, Project Plan for this Project, Information of the CSI's Facilities and Fabrication Shop, and Three Letters of Reference summarizing the CSI's performance on similar projects.

C. Prior to obtaining any material, fabrication, or installation in connection with this Section, detailed shop drawings on all material shall be submitted and approved. Submittal requirements for equipment are listed in individual equipment specification sections referenced in this specification section. Requirements listed in this specification section are in addition to requirements listed in other specification sections.

D. If deviations are proposed, the CSI shall follow the procedures listed in Section 4.6 of the PFM. Should the Department elect to not accept a proposed deviation, the Contractor shall be obligated to provide the original design specified.

E. Drawings

1. Coordination Drawings

a. Submit coordination drawings for review and approval by the Engineer/Department.

b. Coordination drawings shall be prepared by the CSI and shall include the following, as a minimum:

1) Interconnection wiring diagrams showing control panel and field wiring to components and panels provided by other manufacturers. Indication of field wiring to components shall include terminations in intermediate terminal boxes, field devices and instrumentation, control panels and equipment. Diagrams shall include terminal numbers for terminations to equipment.
2) Control panel wiring diagrams for equipment control panels furnished or modified by the CSI
3) Scaled control panel elevations, panel layouts, equipment mounting racks.
4) Drawings shall be prepared by the CSI and shall be developed on a computer aided drafting (CAD) system. The CAD system shall be AutoCAD, latest version as approved by the Department. Drawings shall be printed on 24" high x 36" wide reproducibles. One set of reproducible drawings shall be submitted with the required number of sets of prints. Reproducibles and prints shall be full size 24" x 36".
5) Coordination drawings shall include wiring interconnections, terminations and terminal numbers for connections between equipment and devices and panels provided by the CSI.

2. Record Drawings shall be in accordance with the provisions set forth in Section 01301, CS-SS Station Submittals.

F. Operations & Maintenance Manuals shall be in accordance with the provisions set forth in Section 01301, CS-SS Station Submittals.

1. The CSI shall provide three operations and maintenance manual incorporating all the requirements as specified in each of the following individual equipment specifications:

   a. Section 13342 CS-SS Station Control System Hardware
   b. Section 13348 CS-SS Station Control System Description
   c. Section 13401 CS-SS Station SCADA System
   d. Section 13421 CS-SS Station Instrumentation

2. The final approved Operations and Maintenance Manual shall also be provided on compact disk (CD).

G. Testing, Startup and Demonstration Plan

1. The CSI shall develop a testing and demonstration plan for the equipment, controls and instrumentation that are furnished by the CSI. The plan shall consist of two main components, 1) testing and 2) start-up/demonstration. Both the testing and startup/demonstration shall include factory and site testing of component devices and pieces of equipment individually and as integrated systems. The plan shall be incorporated into the testing and startup/demonstration plan to be submitted by the Contractor.

2. The CSI shall utilize the Factory Acceptance Test (FAT) Check List (Appendix B-8 of the PFM) as guide to the minimum requirements for conducting the FAT. Notify the Engineer of Record and the City a minimum of 14 calendar days in advance to schedule the FAT. The FAT is a witnessed event.

3. The CSI shall utilize the Pre-Site Acceptance Test (Pre-SAT) Check List (Appendix B-9A of the PFM) as guide to the requirements for conducting the Pre-SAT. The Pre-SAT Check List is used to show field test results verifying that all wiring and connected components conform to plans and specifications. Notify the Engineer of Record and the City a minimum of 14 calendar days in advance to schedule the SAT. The Pre-SAT is not a witnessed event.

4. The CSI shall utilize the Site Acceptance Test (SAT) Check List (Appendix B-9B of the PFM) as guide to the minimum requirements for conducting the SAT. The SAT Check List is used to show field test results verifying that all systems conform to plans and specifications. Notify the Engineer of Record and the City a minimum of 14 calendar days in advance to schedule the SAT.

5. CLOSEOUT SUBMITTALS – The following items shall be submitted to the Owner for approval prior to the Start-Up and Demonstration Test:

   a. Certified FAT, Pre-SAT, and SAT reports
   b. O&M Manuals
   c. As-Built Drawings

6. Start-Up and Demonstration Plan of the components, equipment and systems shall include details of staff to be used, testing equipment to be used, listing of equipment and systems to be tested, and a detailed description for testing. Testing shall include final testing of calibrated ranges and actuation settings of instrumentation and field devices, testing of panel mounted controls and control stations, and testing of interlocks, status indication and alarms between panels and systems.

7. For the purposes of preparing the Start-Up and Demonstration Plan, the CSI shall assume that a minimum of six persons employed by the Owner will be witnessing the tests. The Contractor shall notify the Owner in writing a minimum of fourteen (14) calendar days prior to performing startup and demonstration of operation of the equipment and systems.

8. The CSI shall have a representative available on site during the Start-Up and Demonstration. The CSI's representative shall participate in the testing and demonstration of the facility, including testing of individual pumps, testing of multiple operations of pumps, and failure testing and demonstration.

H. Sequence of Construction

1. The CSI shall develop and submit a sequence of construction to include installation of the Pump Control Panel and the level transducer. The sequence of construction shall be integrated with the overall sequence of construction to be developed and submitted by the Contractor.

PART 2 - PRODUCTS

NOT USED

PART 3 - EXECUTION

3.01 CSI COORDINATION AND MEETING REQUIREMENTS

A. General

1. The CSI shall perform the detailed integration and coordination of the control systems and instrumentation equipment furnished in accordance with this specification. Work shall be performed by the CSI's own staff and related equipment manufacturer's engineers where applicable, including submittal drawings, operations and maintenance manuals, as-built shop drawings, equipment testing, operational demonstrations, and other applicable documentation.

2. Coordination with other equipment manufacturers: The CSI shall be responsible for coordinating with the other equipment manufacturer's in order to obtain submittals to be used for coordination of wiring interface. The CSI shall review and coordinate with the equipment manufacturer's submittals.

3. Initial Coordination Meeting

The CSI shall be responsible for scheduling and holding an initial coordination meeting with the Contractor, and Department to review the scope of the project, and the project schedule. The meeting shall be attended by the CSI project manager, and all other parties that are involved in the integration of the control system. The Contractor shall provide written notice of the meeting date at least fourteen (14) calendar days prior to the requested date, and shall have submitted the testing and demonstration plan prior to the meeting date.

3.02 TESTING REQUIREMENTS

A. Correct manufacture of the pump control system is critical to the successful and timely turn-over of facilities to the Department. These Specifications require a Preliminary Factory Acceptance Test (Pre-FAT), Factory Acceptance Test (FAT), a Preliminary Site Acceptance Test (Pre-SAT), and a Site Acceptance Test (SAT). Checklists for these tests are located in Appendix B of this PFM. Specific procedures, personnel required at the tests and Department Charges for certain failed tests are included in Appendix B-12 Pump station Acceptance Procedures, of the PFM.

B. Factory Acceptance Testing (FAT)

1. The CSI shall submit for review a detailed FAT Procedure document including the FAT Check List detailing the procedures, methodology and equipment required to be used for the FAT.

2. The CSI shall perform a complete inspection of the PCP and Motor Control Panel components, wiring and devices to verify compliance with as-built drawings and documentation.

3. The CSI shall develop a configuration program for the PLC and OIT to communicate and display data transferred between the PLC and OIT. Demonstration shall show transmission of data from the PLC input to the OIT screen and activation of PLC outputs from the OIT screen displays.

4. The CSI shall perform an unwitnessed Pre-FAT utilizing the FAT Checklist.

5. Once the PLC and OIT configuration programs have been developed and installed and a successful Pre-FAT has been performed, the Contractor shall forward copies of the PLC and OIT configuration programs and the completed Pre-FAT Checklist to the EOR and the City's I&C Consultant. The Contractor shall then schedule the FAT with the Engineer of Record (EOR). The Contractor shall give at least a two week (14 calendar days)

advance notice of the proposed date of the FAT to coordinate schedules of required personnel.

6. Prior to the scheduled date of the FAT, the City's I&C Consultant shall provide the CSI with the operation logic programs for the PLC and OIT. The CSI shall install the PLC and OIT operation programs prior to the FAT.

7. The FAT shall be performed by the CSI in witness of the Department and/or the City's I&C Consultant. The FAT Check List, upon successful conclusion of the FAT, shall be signed by both the CSI and the witness.

8. The FAT shall include the complete setup of the Pump Control Panel including the PLC, OIT, network equipment and the Motor Control Panels. The FAT shall demonstrate successful transmission of two-way data between the PLC, OIT, and Ethernet I/O adapters, and demonstration of hardwired control and signals between the Pump Control and Motor Control Panels.

9. The FAT is a "Pass/Fail" test. Upon FAT failure, the witness may, at their discretion, declare that the FAT has failed and end the testing procedure. In the event of a FAT failure, the CSI shall correct all deficiencies and reschedule the FAT with the Department's I&C Consultant. This process shall be repeated until the FAT is considered successful by the Department

10. The CSI shall provide the signed FAT Check List to the Department for approval prior to releasing the panels for shipment or installation.

C. Preliminary Site Acceptance Testing (Pre-SAT)

1. The CSI shall conduct a preliminary (unwitnessed) SAT using the Pre-SAT Check List. Only after the Pre-SAT checklist is reviewed and approved by the City will the SAT be allowed to be scheduled. The Contractor shall give at least a two week (14 calendar days) advance notice of the proposed date of the SAT to coordinate schedules of required personnel.

D. Site Acceptance Testing (SAT)

1. The CSI shall submit for review a detailed SAT Procedure document including the SAT Check List detailing the procedures, methodology and equipment required to be used for the SAT.

2. The SAT shall begin after receipt of approved shop drawings and installation of the system components at the site. These shall include:

   a. "As-built" drawings for the Pump Control Panel.
   b. "As-built" shop drawings for the Motor Control Panels

c. Certified FAT results.
d. Pump station power is connected and in operation.
e. All control wires are pulled, labeled, connected, tested, and verified.
f. Pump Control Panel and Motor Control Panels have been installed at the station and wiring terminations (control and power) are completed and verified.
g. All network cables are pulled, labeled, connected, and connections tested.
h. All network devices are installed, connected, and communications verified.
i. Telog Panel is installed, and wiring connection between the Telog Panel, Pump Control Panel, and field devices are installed and verified.
j. All pumps, instrumentation, and mechanical components are installed and operational.
k. Instruments are field calibrated and ranges verified.
l. Spare parts are available on-site or have been delivered to the Department.

3. The CSI shall perform a complete inspection of the PCP and SCADA System Panel components and wiring and devices to verify compliance with as-built drawings and documentation.

4. The City's I&C Consultant will install the operation programs for the PLC and OIT upon notification by the CSI that the equipment is ready for them and that there is power to the pump station.

5. The CSI shall perform operational testing of the PCP and SCADA System by verifying components, wiring, configuration, and communications. Simulate all pump station control conditions, verify successful station control operations, and that data is detected by the PLC and displayed on the OIT.

6. The CSI shall actuate all field devices as practical or simulate signals at the furthest point possible from the PLC and SCADA System inputs. The Contractor shall be available to operate equipment and test status feedback as required.

7. The SAT shall be performed by the CSI in witness of the Department and/or the City's I&C Consultant. The Contractor shall schedule the SAT with the Engineer of Record (EOR). The SAT Check List, upon successful conclusion of the SAT, shall be signed by both the CSI and the witness. The Contractor shall give at least a two week (14 calendar days) advance notice of the proposed date of the SAT to coordinate schedules of required personnel.

8. The SAT is a "Pass/Fail" test. Upon SAT failure, the witness may, at their discretion, declare that the SAT has failed and end the testing procedure. In the event of a SAT failure, the CSI shall correct all deficiencies and reschedule the SAT with the Department's I&C Consultant. This process shall be repeated until the SAT is considered successful by the Department.

3.03 PUMP STATION OPERATIONAL STATUS

CSI shall coordinate work with Contractor so work performed by different trades will not be in conflict.

3.04 INSTRUMENTATION

The CSI shall coordinate and supervise the installation of instrumentation equipment furnished by the CSI as specified. Instrumentation shall be installed in accordance with the requirements of Section 13421, CS-SS Station Instrumentation.

3.05 FIELD QUALITY CONTROL

A. Installation: The CSI shall provide on site supervision and advice to the installing contractor to insure the equipment is installed in accordance with the specifications and the manufacturer's requirements.

B. Inspections & Field Calibrations

1. Any and all testing equipment required for this project shall be owned by the CSI so as to be immediately available for this project.

2. Calibrate instrumentation and place each system into operation. The commissioning of each system shall include the overall calibration and tuning of all control loops and sequences to provide stable control of the process. The validity of all process inputs and outputs for each system shall be checked and corrected during the system commissioning. Final adjustment and calibration shall be performed for all equipment prior to initiation of final testing.

C. Field Demonstrations

1. Demonstrate the control features of each panel and associated field mounted instrumentation and control equipment, to verify that each panel performs the required control functions and logic as shown on the Project Drawings or as specified. Control features shall include relay energization, initiation of alarm conditions, resets, interlocks, set point activation, and other functions of the control panels.

2. Equipment shall be field demonstrated to operate satisfactorily in the presence of the Department, and shall be conducted in accordance with the CSI's testing and demonstration plan that has been reviewed by the Engineer. Field demonstrations shall be performed after successful installation, calibration and testing of each control panel.

3. In addition to demonstrating the operation of standard control features, special control panel functions shall be demonstrated as specified for each panel.

4. The Contractor shall provide the necessary test equipment, process media, materials, supplies, and qualified test personnel to perform the field demonstrations as specified herein.

5. Field instrumentation control signals that are required to demonstrate the operation of associated control panels may be simulated upon approval of the Department.

6. In the event of failure of the field demonstration, the Contractor shall perform the necessary corrections and re-demonstrate, at the Contractor's own cost and expense, for the affected equipment as directed by the Department.

END OF SECTION

This page intentionally left blank.

SECTION 13342

CS-SS STATION CONTROL SYSTEM HARDWARE

PART 1 - GENERAL

1.01 ABBREVIATIONS

CSI	Control Systems Integrator
I/O	Input / Output
OIT	Operator Interface Terminal
PLC	Programmable Logic Controller
PCP	Pump Control Panel
UL	Underwriters Laboratory
UPS	Uninterruptible Power Supply
TVSS	Transient Voltage Surge Suppressor
SCADA	Supervisory Control and Data Acquisition

1.02 SCOPE

A. The CSI shall be capable of performing the fabrication, installation, calibration, configuration, programming and other functions that are required for and incidental to providing the pump station control system. The CSI shall provide all labor, tools, equipment and software as required to perform the functions as specified.

B. These Constant Speed Soft Start (CS-SS) specifications are intended to be used for wastewater pump stations fifteen (15) horsepower and greater in the City of Suffolk, Virginia.

C. The requirements of this section include all labor, materials, equipment and services necessary for and incidental to the complete and satisfactory installation of the Pump Control Panel (PCP), and associated equipment that will make up the primary element of the pump station control and monitoring system. Automatic control and monitoring of the pump station operation and equipment as well as interfacing with the City's SCADA System shall be accomplished using hard wired I/O connected to the SCADA System.

D. The control system shall consist primarily of a PLC with logic based software, I/O cards for field and control wiring interface and an OIT for operator interface and monitoring. The PLC shall be used for processing I/O for monitoring and control of the station as well as repeating I/O for transmission to the City's SCADA System. The control system shall provide alarm annunciation, mechanical and electrical equipment and systems monitoring, data collection and trending, and monitoring of the station functions to the SCADA System.

E. The CSI shall be responsible for the furnishing of the specified components of the control system, including the PLC, OIT and components for the pump control panel (PCP), specified herein, and the configuration programming of the PLC and OIT. Operational programming of the PLC and OIT shall be the responsibility of the Department's designated representative.

1.03 QUALITY ASSURANCE

A. Qualifications of Manufacturer:

1. All equipment furnished under this Section shall be furnished by manufacturers who meet the quality, workmanship, and experience requirements as specified in the General Provisions section of this Project and Section.

2. To the extent possible, all PLC and OIT equipment and software specified under this section shall be furnished by a single manufacturer who shall have at least five years' experience in the design, production, assembly, and field service of equipment of like size and type.

3. Materials and installation shall be in accordance with the latest revision of the following:

   a. Underwriters Laboratories (UL)
   b. National Electrical Manufacturer's Association (NEMA)
   c. Institute of Electrical and Electronics Engineers (IEEE)
   d. National Electric Code (NEC)
   e. International Society of Automation (ISA)

1.04 SUBMITTALS

A. Submittals shall be in accordance with the provisions set forth in Section 01300 and Chapter 4.6 of the PFM.

B. Provide manufacturers descriptive information on all equipment and components provided. Equipment literature shall indicate operational ranges, ratings, certifications, limitations, installation recommendations and warrantees.

C. Provide scaled detail drawings for each control panel fabricated for this project. Drawings shall be complete with a Bill of Materials (quantity, description, manufacturer and part number), electrical circuit diagrams, and I/O diagrams showing terminals, wire numbers and configuration of field devices.

D. Provide scaled drawings showing mounting details, locations, interconnections and other information pertaining to field installation.

E. Submittals shall include the following for the PCP:

1. Interconnection diagrams including terminal identification for all field connected devices.

2. Symbol list and legend for all symbols used in the submittal.

3. Power requirements and connection information for all components requiring external power.

4. Interconnection cable for external connections (e.g. shielded No. 16-2 AWG).

5. Identification of all conductors to be terminated in the field.

6. Identification numbers for all spare conductors, input/output modules, and terminals.

7. Submittals shall include a system schematic diagram showing all equipment/modules, devices, power connections and data links for the complete system. Diagrams shall include device identification, terminal numbers and communication port identifiers, cable and cable connectors.

8. Submit a complete spare parts list for equipment specified to be furnished under this Project and a manufacturer's recommended spare parts list.

9. Submittals for PLC hardware and components, and OIT hardware and components shall include catalog data, installation and maintenance instructions, and detailed schematics on cabling and wiring connections.

10. Elevation views of interior panel layouts, including equipment, wiring and terminals.

F. Provide catalog data for the following:

1. Equipment dimensions, including shipping splits, stub-up locations and shipping weights.
2. All major components.
3. PLC system
4. OIT
5. Digital Displays
6. Pilot lights and switches

7. Surge protection devices
8. TVSS
9. UPS
10. Wiring Diagrams.

G. Each submittal shall be provided with a detailed list. Any deviations from the specifications and Project Drawings shall be addressed in strict conformance with the provisions set forth in Section 01301 and Chapter 4.6 of the PFM.

H. Each data sheet shall be marked with the tag number for the device and the data sheet shall be marked with the part number or model number of the specific item to be provided under this project. Data sheets not marked as provided above may be cause for rejection of the shop drawing submittal.

I. Operations and maintenance manuals shall be in accordance with Section 01301 CS-SS Station Submittals and as specified herein.

1. O&M manuals shall include the following information as a minimum:
2. System Specifications
3. Electrical Power Requirements
4. Assembly and Installation Procedures
5. Power-up Procedures
6. Troubleshooting Procedures
7. Explanation of internal fault diagnostics
8. Shut-down Procedures
9. Recommended Spare Parts List
10. Description of operation for OIT and workstation functions
11. Manufacturer's troubleshooting guide and instructions for PLC and OIT hardware

1.05 WARRANTY

A. The warranty shall provide (a) a minimum of next-day, on-site service for emergency failures, and (b) replacement of the defective component within one week, if repairs cannot be affected within that time. A five calendar day response time, on-site service, is required for non-critical failures. Work under the warranty shall be provided by the CSI responsible for the system installation. This warranty shall cover a period of one year from the date of final acceptance of the project unless otherwise specified. The Department shall be the sole determiner of the severity of a failure and whether the failure is an emergency or non-critical failure.

PART 2 - PRODUCTS

2.01 ELECTRICAL

A. Wires within control panel: All wiring shall be made in horizontal and vertical runs, and groups of wires to and from common points shall be made in PVC wire ducts and adequately supported. Analog and discrete signal wiring shall be in separate wire ducts, or if required to be in the same duct they shall be separated with vertical dividers.

1. Panel Wiring:

a. Type MTW or TFFN color coded stranded copper.

1) AC Power = Black
2) AC Control = Red
3) Neutral = White
4) Ground = Green
5) DC Control Circuits = Blue
6) DC +24 V Supply = Yellow
7) DC 24 V Supply Common = Brown
8) DC +12 V Supply = Red/yellow stripe
9) DC 12 V Supply Common = Brown
10) Rated for 600 Volts, 105 degrees C. Sized for current to be carried, but not less than No. 16 AWG.
11) Twisted-Shielded Pair (TSP) = Gray or black. Wire size minimum is 18 AWG.
12) Ethernet wiring shall be CAT-5E Shielded

2. Special Signal Circuits:

a. Manufacturer's standard cables or recommend cables.

3. Wire Identification:

a. Wire IDs shall be numbered and tagged at each end of termination.

b. Tags shall be legible with machine printed markings and numbers. Numbers shall be arranged and sized for easy identification without removing wire from terminal strip. Each wire shall be marked with unique numbers, identical on both ends.

c. Tags shall be on heat shrinkable irradiated polyolefin that will not smudge or fade when printed. Adhesive or taped on tags are not

acceptable. Handwritten markings will not be allowed.

d. Labels shall be produced using Brady TLS 2200 Thermal Labeling System.

2.02 CONTROL PANEL TERMINAL BLOCKS

A. Terminal blocks shall be provided for all external connections, plus a sufficient number of spares to provide no less than twenty percent (20%) extra terminals. Each used, unused and/or spare input and output of the PLC control system shall be terminated to a terminal block.

1. No more than two wires shall be connected to any one terminal block.

2. Splices shall not be permitted in control panels; all wiring shall be terminated at a terminal.

3. Electrical power, control and alarm wiring shall be terminated in terminal block assemblies separate from blocks used for analog signal wiring.

4. All terminals shall be TS 32 DIN rail mountable. End plates shall be provided to isolate different signal types. Interconnections between terminals shall be made with a screw type fixed bridge. Each group of terminal blocks shall be secured with an end clamp.

5. Marking System: Mark terminal block and terminal strip numbers as shown on the panel control diagrams and loop drawings. Terminal markings shall be black numbers/letters permanently engraved on white background. Handwritten markings will not be allowed.

6. DIN Rail shall be 35 mm x 7.5mm standard aluminum DIN rail.

7. General Purpose Terminal Blocks:

   a. Rated Voltage: 600 Volts.
   b. Rated Current: 30 Amps.
   c. Wire Sizes: #26 to #10 AWG.
   d. Width: 0.25-inch
   e. Color: Gray
   f. Manufacturer: Weidmuller ZDU (Single) or (double).

8. Ground Terminal Blocks:

   a. Wire Sizes: #26 to #10 AWG.
   b. Width: 0.25-inch

c. Color: Green & Yellow
d. Manufacturer: Weidmuller ZDU.

9. Fused Terminal Blocks:

a. Rated Voltage: 600 Volts
b. Rated Amperage: 25 Amps
c. Wire Sizes: #26 to 8 AWG
d. Width: 0.4 inch
e. Color: Black
f. Indicator: LED
g. Manufacturer: Weidmuller, WSI 6.
h. Provide fuse blocks as required to protect circuits, power supplies, etc as shown on Project drawings and for each individual PLC analog input loop.

10. Grounding:

a. Copper grounding lug for signal and shield ground connections shall be provided.
b. Ground the ground bus at a common signal ground point in accordance with National Electrical Code requirements.
c. Ground terminal block rails to ground bus.
d. Provide grounding for each analog loop:

1) DC power supply common.
2) Group and connect shields at PLC Panel and tie to common panel ground.

2.03 PUSH BUTTONS, SELECTOR SWITCHES, AND PILOT LIGHT UNITS

A. The CSI shall furnish and install all controls required to be installed in control panels and enclosures required to be furnished by the CSI. Controls provided for installation in control panels and enclosures specified to be provided by manufacturers and suppliers other than the CSI are not required to be furnished by the CSI.

B. Push buttons, selector switches, and pilot light units shall be 30.5 mm NEMA/UL Type 4/13 rated devices as manufactured by Allen-Bradley, Bulletin 800T, no substitutions.

C. Provide sufficient contact blocks on devices in arrangements shown on the Project Drawings such that all required functions are provided. No more than two wires shall be terminated on each terminal.

D. Controls shall operate on 120 VAC power.

E. Pilot light units shall be LED type and be wired for "push-to-test" operation. Pilot light units shall be 120 volt transformer type. Pilot light units shall be provided with interchangeable color caps.

2.04 POWER SUPPLIES

A. Power supplies for installation in the control panels shall be provided as required for powering of instruments that require external DC power, including PLC's, Ethernet switch, transmitters and OIT.

B. Power supplies shall convert 120VAC, 60Hz power to 12 or 24VDC power of appropriate voltages with sufficient voltage regulation and ripple control to assure that instruments being supplied are operating within their required tolerance.

C. Output over voltage and over current protective devices shall be inherent in power supplies to protect instruments from damage due to power supply failure and to protect the power supply from damage due to external failure.

D. Performance Specifications:

1. Input Voltage: 104-127VAC.
2. Input Frequency Range: 47-63Hz.
3. Harmonic Ripple Affect: 0.1% peak to peak.
4. Polarity may be used positive or negative.
5. Short Circuit Protection: Automatic circuit protects the power supply if the output is shorted continuously. There shall be automatic return upon removal of a short circuit.
6. Operating Ambient Temperature: 0-50 degrees C.
7. Recovery Time: Less than 20 microseconds, one-half load to full load.
8. Output Voltage Adjustment: ±5% minimum.
9. Power supply mounting should be in such a way that the dissipated heat does not affect other components within the panel layout.
10. All DC loads within the panel shall be fused.
11. Manufacturer: IDEC, OMRON.
12. Power calculations shall be provided for load requirements. Power supply shall be rated for 150% of load as a minimum.
13. Power supply shall be UL-508 Listed.

2.05 SURGE/TRANSIENT PROTECTION (LINE SURGE PROTECTION)

A. Transient Voltage Surge suppression (TVSS) shall be provided to protect the components of the control panels against damage due to electrical transients induced by lightning and nearby electrical systems.

B. Provide TVSS for 120 VAC control power circuits in PCP. All incoming AC sources shall be protected by the Cutler Hammer AEGIS-HW style surge protector.

2.06 SURGE/TRANSIENT PROTECTION (CURRENT LOOP SURGE PROTECTION)

A. All analog wiring from field mounted transmitters, receivers, and related devices shall be protected by a MTL, Inc. model SD32. The surge protection shall be mounted within the control panel and they shall protect the PLC I/O cards and related equipment from damage.

B. Performance Specifications:

1. Supply Voltage, Line to Line: 32V typical.
2. Supply Voltage Line to Ground: 28V maximum.
3. Minimum Life: >1000 operations with 200A, 10x1000 microseconds.
4. Operating Temperature Range: -40 to +80 degrees C.
5. Manufacturer and Type: MTL, Inc., SD32.

C. All analog field mounted transmitters shall be protected by a Bourns Model 1669-06. These surge protectors shall be mounted at the field equipment to protect the transmitter from damage.

D. Performance Specifications:

1. Supply Voltage, Line to Line: 30V maximum.
2. Supply Voltage Line to Ground: 28V maximum.
3. Resistance Added to Loop: 44 ohms maximum.
4. DC Clamping Level, Line to Ground: 36V-±10%.
5. Operating Temperature Range: -40 to +100 degrees C.
6. Impulse Clamping Level, Line to Line: 50V maximum.
7. Impulse Clamping Level, Line to Ground: 70V maximum.
8. Surge Life: 20 kA 8/20 microseconds, 20 times.
9. Surge Life: 1kA; 10/1000 microseconds, 1000 times
10. Housing: ¾” pipe nipple with ¾-14 NPT on one end.
11. Manufacturer and Type: Bourns, Model 1669-06.

E. Provide surge protective devices in PCP for all analog circuits entering and leaving the panels from an instrument or a 4-20 mA producing device.

2.07 UNINTERRUPTIBLE POWER SUPPLY (UPS)

A. UPS-EATON EX as manufactured by EATON, sized to provide a minimum of 2

hours of backup power for PCP control panel and equipment while station is under backup power operating conditions. UPS shall be provided with a by-pass switch.

2.08 ISOLATORS

A. Provide signal isolators in control panels for 4-20 mA loops where required to prevent ground loop or circuit load problems, and as indicated on the Instrumentation drawings.

B. Isolators shall have an input power of 24VDC and be DIN rail mount. Where circuit loading exceeds the maximum allowable resistance for the circuit, provide 4 wire type isolators with 120 VAC input.

C. Accuracy shall be ±0.10% over ambient temperature range of 0-50 degrees C.

D. Isolators shall allow for field adjustments of input signal offset and span.

1. Isolators shall be AGM Series 4000, or as required for circuit loading.

2.09 CONTROL PANEL ENCLOSURE FOR PCP

A. Provide enclosure as indicated on the Instrumentation drawings. Enclosure for PCP shall be, NEMA 12.

B. NEMA 12 enclosure for interior installation shall have the following features:

1. 12 gauge steel construction.
2. Smooth continuously welded seams.
3. Heavy gauge continuous piano hinge.
4. Oil resistant door gasket.
5. 3-point latching and key locking handle, spring roller type
6. Finish shall be manufacturer's standard.
7. Document pocket mounted on the interior of door.
8. Subpanel constructed of 14 gauge steel, minimum, with white enamel paint finish, intermediate stiffeners and Type 316L stainless steel hardware.
9. Exterior shall be two coats of ANSI 61 Gray 1-part epoxy by Sherwin Williams.
10. Panel shall be UL listed.

C. Modifications to the enclosure shall maintain the NEMA Type 12 rating of the enclosure.

D. Enclosure shall be as manufactured by Hoffman Engineering.

2.10 MISCELLANEOUS PANEL EQUIPMENT

A. Service Lights:

1. Internal panel service lights shall be provided and shall operate on 120 VAC power.

2. Light shall be top mounted fluorescent with manual switch.

3. Light shall be mounted internally at the top front of the enclosure.

4. Light shall be Hoffman fluorescent fixture ALD25D18R with F15T8 bulb.

B. Service Outlets:

1. Provide 120V, 15A DIN rail mounted convenience duplex receptacle inside the enclosure.

2. Receptacle shall be Phoenix Contact EM-DOU.

C. Elapsed Time Meters:

1. Elapsed time meters shall be non-resetting 2.5-inch Big Look Yokogawa Model 240211AAAB.

D. Identification Nameplates and Legend Plates:

1. Nameplates shall be machine engraved ¼-inch high (1 inch high for enclosure title) black capital letters on a 1/8-inch thick plastic black tag with white letters mechanically attached to the enclosure. Nameplates shall not be engraved by hand. Provide nameplates as indicated on the Instrumentation drawings.

2. Legend plates shall be metal with black lettering mechanically attached to the control panel.

3. Provide nameplates for equipment and components mounted on the interior of the panel. Nameplates shall be mounted adjacent to, but not on the equipment. Nameplates shall not be hand written.

2.11 INTRINSICALLY SAFE BARRIER - LEVEL TRANSMITTERS

A. Provide Intrinsically Safe Barrier for connection to level transmitter circuit as indicated on the Instrumentation Drawings. Barrier shall be compatible with the level transmitters specified in Section 13421 CS-SS Station Instrumentation.

B. Intrinsically safe barrier for analog circuits such as the level transmitter circuit shall be snap-on type, suitable for DIN rail mounting and grounding. Relays shall be suitable for use with intrinsically safe circuits installed in Class I, Division 1, Group D Hazardous Locations, and shall be FM, UL and CSA approved for use in such circuits. Barrier shall loop powered for energizing the two-wire, 4-20 mA level transmitter located in the hazardous area and connected loads. Barriers shall be approved by the manufacturer of the pressure transmitter for interfacing with the specific transmitter supplied.

C. Barriers shall be provided in the analog circuit to provide an intrinsically safe circuit suitable for installation in a Class I, Division 1, Group D Hazardous Location.

D. Install barriers in accordance with UL-698A and NEC Article 504.

E. Intrinsically Safe Barriers shall be as manufactured by RSTAHL, Model 9002.

2.12 INTRINSICALLY SAFE ISOLATORS – FLOAT SWITCH

A. Provide intrinsically safe isolators in the control panel for interfacing with the float switch circuits as indicated on the Instrumentation drawings. Intrinsically safe isolators used with dry contact inputs shall be provided with an energy barrier limiting the available voltage and current for the circuit installed within the confines of the Hazardous Location. The isolators shall interface with field equipment installed in Hazardous Locations that are not provided with explosion-proof enclosures, such as float switches. Isolators shall be suitable for intrinsically safe circuits installed in Class I, Division 1, Group D, Hazardous Locations, and shall be approved by Factory Mutual and Canadian Standards Association for installation in such locations.

B. Isolators shall be solid state design, and shall be suitable for operation on 24 VDC power, provided with two, double throw contacts rated at 2.0 amperes at 120 VAC.

C. Install barriers in accordance with UL-698A and NEC Article 504.

D. Isolators shall be MTL, Inc. Model 5514 series.

2.13 CONTROL AND TIMING RELAYS

A. The CSI shall furnish and install all controls required to be installed in control panels and enclosures required to be furnished by the CSI. Controls provided for installation in control panels and enclosures specified to be provided by manufacturers and suppliers other than the CSI are not required to be furnished by

the CSI.

B. Provide relays with sufficient poles such that all required functions are provided. No more than two wires shall be terminated on each terminal of the relay socket.

C. Contact ratings shall be minimum 10 amperes at 24 VDC or 240 VAC. Contact material shall be silver cadmium oxide. Relays shall be provided with LED indicator to illuminate when the coil is energized. Timing relays shall be solid state with external adjustable time settings within adjustable time ranges. Timing relay shall have four selectable modes: On-delay, off-delay, one-shot and repeat cycle with adjustable on and off time periods.

D. Provide relays with 120 VAC or 24 VDC powered coils as required to meet functions indicated in Project Drawings. The 120 VAC coil relays shall be blade type plugs and the 24 VDC relay coils shall have pin type plugs. Relays shall be UL recognized devices as manufactured by IDEC, RH series.

2.14 OPERATOR INTERFACE TERMINAL (OIT)

A. An operator interface terminal shall be provided to communicate locally with the PLC, allow changing of control and alarm set points, display equipment status, annunciate alarms, change control modes, and other interfacing required for the monitoring and control of the pump station. The OIT shall be provided with the following:

1. A 10" (10.5 diagonal display) touch activated TFT (active display) with 640W x 480H minimum color display resolution

2. Mounted on the control panel with no more than 4.5" depth and shall operate from 18 to 32 VDC, or 24 VDC nominal.

3. OIT shall have NEMA 12 rating

4. The unit shall include all cables, interfaces, and associated hardware and software to allow two way communications with the PLC.

   a. OIT shall be compatible with and support PLC using EtherNet communications.

   b. The OIT software for developing graphic display screens and data display screens shall be the manufacturer’s standard package.

   c. Operator Interface Terminal’s display screens shall be as specified in Section 13348 CS-SS Control System Description.

d. OIT shall be PanelView Compact 2711PC-T10C4D8 as manufactured by Rockwell Allen Bradley no substitutions.

2.15 PROGRAMMABLE LOGIC CONTROLLER (PLC) SYSTEM

A. General:

1. The PLC processor and related equipment shall be the product of one manufacturer and components shall be completely compatible.

2. The processor shall have downward capability, whereby all new module designs are capable of being interchanged with similar modules to reduce obsolescence.

3. The PLC processor shall be designed and tested to operate in industrial, high electrical noise environments. The system shall be provided with RFI protected shields and barriers to prevent interference with other electrical systems.

B. PLC Processor:

1. The PLCs shall be microprocessor-based, stand alone device. It shall be designed for industrial environments, capable of a mix of relay logic, timing, counting, computation, and shall include a library of preprogrammed subroutines. The PLC processors shall include a time of day real-time clock and calendar.

2. The PLC processor memory shall be nonvolatile (flash) memory.

3. The PLC processor shall be provided with 1784 CompactFlash Card to back up processor memory. The CompactFlash Card module shall provide a minimum of 64 MB storage space to back up user program and tag data.

4. The PLC processor shall be capable of interfacing with the type of input/output (I/O) modules shown on the Project Drawings and specified herein. The PLC processor shall be capable of communicating with up to 16 1769 I/O modules.

5. The unit shall be provided with a key selector switch with Run/Remote/Program operating modes.

6. The PLC shall have relay logic with contacts, a mix of timers, counters, algebraic equations and manipulations consisting of addition, subtraction, multiplication, division, automatic scaling and un-scaling routines, and

BCD conversion routines.

a. Logic Control: The processor shall perform the same functions as a conventional logic system including relays, on delay timers, off delay timers, counters, and drum sequencers.

b. Compare Function: The processor shall perform the compare functions that compare two integers or floating point numbers for less than, equal to, greater than, and not equal to. The programmed function shall energize a relay when true and de-energize it when false.

c. Move Function: The move function shall move an integer or floating point value from one memory location to another memory location when an internal permissive is enabled.

d. Math Function: The processor shall perform addition, subtraction, multiplication, and division or signed integer floating point numbers.

e. Square Root Function: The processor shall take the square root of a positive integer.

f. Binary to BCD Function: The processor shall convert a positive binary number to a positive four-digit BCD coded number.

g. PID Control: The processor shall perform proportional, integral and derivative control of a process with adjustable ranges for: Proportional Gain, Reset Time, and Derivative Time.

h. PLC System Alarm (PLC Fault): The PLC processor shall monitor the internal operation of the PLC system for failures. If a failure is detected, the system shall shut down, energize or de-energize a failure relay, and freeze all inputs and outputs in their last states until the error is cleared. As a minimum, the following failures shall cause the system to shut down: Memory Failure, Memory Parity Error, I/O Cycle Failure, Operating System Error, or Watchdog Timer Time-out. In the event of a PLC fault, the analog output shall become zero. The PLC shall only resume normal operation when the fault condition has been cleared.

7. The PLC shall be provided with the following features:

a. The PLC processor shall be capable of retaining last state in the event of a power outage.

b. The PLC processor shall be provided with the following communication ports as a minimum:

1) EtherNet port – EtherNet/IP port 10/100 BASE-T

2) RS-232 port – RS232 port fully isolated 38.4 Kbps max

c. Peripheral devices such as programming panels or host computers shall be connected directly to the PLC processor through the RS232 communications port, the EtherNet port or through a 1761-NET-AIC module.

8. The PLCs shall be provided with a user memory of 750 KB and shall be of the following manufacturer:

a. Rockwell Automation/Allen-Bradley CompactLogix, Ethernet, part number 1769-L32E, no substitutions.

9. As a minimum, the actual programming memory shall be sufficient to accommodate the quantity and type of I/O, including spare and future I/O, as indicated in Section 13345 CS-SS Input/Output Point List, and to execute the required functions described in Section 13348 CS-SS Control System Description.

C. Input/Output (I/O) Modules:

1. General:

a. The input/output (I/O) modules shall be tongue-and-grove backplane type and shall be compatible with the PLC processor I/O structure. Each module shall be provided with a removable wiring terminal block to connect panel wiring to the module.

b. The Instrumentation drawings do not necessarily indicate all required I/O modules, both quantity and type. Provide I/O modules of sufficient quantity and type to accommodate the I/O listed in Section 13345 CS-SS Input/Output Point List, including active, future and 25% spare I/O. The modules shall be UL-508 Listed

2. Discrete Input (DI) Modules:

a. Discrete input (DI) modules shall be 115 VAC, 16 point input modules suitable for use with 115 VAC, 60 Hz input devices such

as selector switches, push buttons, and motor starter contacts. The modules shall have 1500 VAC Opto-electrical isolation, LED status indication, and input noise filtering.

3. Discrete Output (DO) Modules:

   a. Discrete output modules shall be 115 VAC, 16 point output modules suitable for use with 115 VAC output devices such as motor starter coils and indicating lights. The module shall have an output rating of 12 amperes maximum and 2 amperes per output, and have 1500 VAC Opto-electrical isolation. The modules shall be configured to either assume last state or reset in the event of a module fault.

   b. Each discrete output shall be provided with an interposing relay interface for active, future and spare points. Control relays for all active, future and spare points shall be connected and wired to field terminal strips.

4. Analog Input (AI) Modules:

   a. Analog input (AI) modules shall convert 4 differential or single-ended analog signals to proportional sixteen-bit binary values. The modules shall accept 4-20 mA or 1-5 V DC signals from devices such as transmitters, converters and analyzers. The modules shall be suitable for either 2- or 4-wire systems. The input power for each signal shall be derived from a DC power supply external to the module. The accuracy of the module shall be +/- 0.2% of full scale at 25degrees C.

5. Analog Output (AO) modules:

   a. Analog output modules shall convert 14-bit binary values to 4 single-ended analog output signals. The modules shall output a 4-20 mA DC signal to devices such as variable frequency drives, modulating valves, and SCR heating. The analog output shall be capable of driving a 0-600 ohm load without adjustment. The system power shall be provided through the I/O backplane.

D. Power Supplies:

1. A power supply shall be provided to provide power to the PLC processor and local I/O modules. Additional power supplies shall be provided to power remotely located I/O modules.

2. Power supplies shall be modular type with a minimum output current of 4 amps. Power supplies shall operate on a 120 VAC, 1 phase power source.

3. The power supplies shall be sized by the manufacture's to provide sufficient backplane current to power the entire I/O module train (eight (8) modules each side of power supply). The power supplies shall be provided with a minimum of 25% spare capacity in addition to the total calculated backplane current for existing and future modules.

4. Power supplies shall be provided with input fusing, surge protection and shall provide isolation from the incoming source. The power supply shall be provided with integral status indicators.

E. Miscellaneous:

1. Provide special cabling, connectors, modules and appurtenances as required for proper connection and operation of the PLC system.

2.16 ETHERNET SWITCH

A. Provide Industrial Ethernet Switch(s) with a minimum of five ports for allowing communications between the Programmable Logic Controller (PLC) and the Operator Interface Terminal (OIT). The Industrial Ethernet Switch shall be an unmanaged fast ETHERNET din-rail switch compliant to IEEE 802.3 and ISO/IEC 8802/3 for extended environmental conditions.

B. Ethernet Switch shall have the following features.

1. Minimum Five 10/100 base TX ports
2. Twisted Pair cable, RJ45 sockets, auto-crossing, auto-negotiation, auto-polarity.
3. Distance: Twisted Pair 0-100 M
4. Operating Voltage 9.6 to 32 VDC
5. Diagnostic LED's: Power, link status, data and data rate
6. Accessories: Universal Ac power supply Model AC24VT

C. Industrial Ethernet Switch shall be Hirschmann Model Spider 5TX.

2.17 PROXIMITY SWITCH

A. Provide an inductive proximity switch to be mounted on each pump check valve to monitor the movement of the check valve arm for determination of flow from the pump through the check valve.

B. The proximity switch shall have the following features:

1. Construction: Nickel plated brass 12 mm diameter IP-67 (NEMA 4)
2. Nominal Sensing distance 4 mm
3. Integral cable
4. Two wire operation 20 -120 VAC normally open output.
5. LED indicator 360 Degree visibility

C. Proximity Switch shall be Allen Bradley model 872C.

2.18 FLOAT SWITCH

A. Float switches shall be narrow angle control duty with integral cable and weight.

B. Conery Manufacturing Model 2900-B1-S1-C1.

2.19 SPARE PARTS

A. Provide the following spare parts related to products in this section:

1. One of each type of power supply, including PLC power supply

2. Two of each type of I/O cards provided on the project.

3. One PLC processor.

4. Two of each type of intrinsically safe barrier relays provided on the project.

5. One power surge protector (TVSS).

6. One analog circuit surge protector.

7. Two analog current isolators, if used.

8. One digital display of each type used.

9. One box each type of fuses used – minimum 3 each fuse of each type.

10. Five LED of each color used for the pilot lights.

11. One control relay and one timing-relay of each type used.

12. Two proximity switches.

B. Spare parts shall be provided in the manufacturer's standard packaging, and shall be clearly labeled with the following information:

1. Component type

2. Project name and number

3. Specification section

PART 3 – EXECUTION

3.01 INSTALLATION

A. Install the PLC, I/O modules and panel devices in the control panel per manufacturer's recommendations. Terminate wires from all I/O points to the terminal blocks within the control panel.

B. Equipment Mounting: Provide six inch minimum clearance between conduit and tubing entrances and the closest wiring trough or terminal strip. All equipment mounted within the enclosure shall be easily accessible for servicing.

C. Conduit Penetration: Where conduits will be entering the bottom of the enclosure, a suitable opening shall be cleanly punched in the bottom. Holes drilled, cut with a saw, torch, etc., in the field, will not be acceptable. Conduit entrances shall be towards the back of the enclosure to provide a shelf area on the bottom of the enclosure. Conduit nuts with sealing rubber gasket shall be used on all conduits entering boxes and cabinets.

D. Conduit Penetrations for Intrinsically Safe Circuits: Where conduits enter the enclosure and are for intrinsically safe circuits; space shall be provided to ensure safe circuits and non-safe circuits are separated as required by UL-698A and NEC Article 504.

3.02 CONTROL PANEL FABRICATION

A. All components, equipment, wiring, controls and appurtenances indicated and specified to be installed in the control panel shall be installed by the CSI.

B. Door mounted controls and equipment shall be mounted such that they are easily accessible, with components mounted a minimum of 30" above finished floor elevation and a maximum of 72" above finished floor elevation.

C. Intrinsically safe barriers and circuit wiring shall be physically separated

from all other wiring and components in accordance with the NEC and UL-698A. Intrinsically safe components and circuits shall be grouped together in one location within the panel.

D. For control panels with intrinsically safe circuits extending to hazardous areas, the control panel shall be fabricated to UL-508 Standards, and be UL-698A listed with serialized label. All other control panels shall be UL-508A Listed.

3.03 PUMP CONTROL SYSTEM TESTING

Testing shall be as detailed in Specification Section 13011 and the PFM.

END OF SECTION

This page intentionally left blank.

SECTION 13345

CS-SS INPUT/OUTPUT POINT LIST

PART 1 - GENERAL

1.01 SCOPE

A. These Constant Speed Soft Start (CS-SS) specifications are intended to be used for wastewater pump stations fifteen (15) horsepower and greater in the City of Suffolk, Virginia.

B. This section describes the input/output (I/O) point list for the Programmable Logic Controller (PLC) to be installed for monitoring and control of the pump station and associated equipment. The I/O list is included at the end of this section.

C. The I/O list includes interface points between the PLC and the pump station controls housed in the Pump Control Panel (PCP), between the PLC and field equipment, and instrumentation, and between the PLC and the Solid State Reduced Voltage Starter (SSRV) for Pump 1 and Pump 2. The City's SCADA system will allow monitoring of status and alarm conditions at the pump station.

PART 2 - PRODUCTS

2.01 GENERAL

A. The I/O point list contains the information necessary to configure the I/O interface hardware and to indicate range conversion or signal functions associated with the PLC.

B. POINT NAME is an alphanumeric character string. For the point F-123, the following apply:

1. The letter (F) is the functional identification. In the example, the "F" represents flow. Refer to the instrumentation legend on the Instrumentation Drawings for function identification representation, or in the legend contained herein.

2. The three digit number (123) identifies the loop number or field device.

C. DESCRIPTION is an alphanumeric character string up to twenty-four positions in length. FUTURE indicates future points for which pre-wired I/O hardware shall be provided. SPARE indicates spare points for which pre-wired I/O hardware shall be provided. All future and spare I/O points shall be wired to field terminal

blocks and provided with output relays and fuses in the manner specified for active points.

D. SIGNAL TYPE shall be one of the following:

1. AI – designates an analog input (all are 4-20 mA)

2. DI – designates a digital input.

3. AO – designates an analog output (all are 4-20 mA)

4. DO – designates a momentary, maintained or latched digital output.

E. DATA FIELD 1 and DATA FIELD 2 describe the function or signal characteristics. These are further defined under each signal type.

F. RELAY is used only for digital outputs to indicate the type of control relay:

1. MO designates momentary.

2. MA designates electrical latching.

3. LA designates mechanical latching.

G. ALARM is used only for digital inputs to distinguish between status inputs, and alarm inputs.

1. A designates Alarm.

2. No designation indicates a status point only.

2.02 PLC ANALOG INPUT

A. DATA FIELD 1 is the electrical input signal range and units.

B. DATA FIELD 2 is the process parameter range and engineering unit.

2.03 PLC DIGITAL INPUT

A. DATA FIELD 1 is the condition that exists when a field contact is open.

B. DATA FIELD 2 is the condition that exists when a field contact is closed.

2.04 PLC ANALOG OUTPUT

A. DATA FIELD 1 is the electrical output signal and units.

B. DATA FIELD 2 is the range of the controlled variable and engineering units.

2.05 PLC CONTROL DIGITAL OUTPUT

A. Control digital outputs can be momentary, maintained or latched.

B. DATA FIELD 1 is the contact closed function.

C. DATA FIELD 2 is the contact open function.

PART 3 - EXECUTION

3.01 POINT DATA FIELDS AND I/O POINTS

A. I/O point data fields shall be subject to review and modification by the Department during the shop drawing review phase. All changes directed by the Department shall be incorporated completely into the entire system at no increase in Project price subject to the following limitations:

1. The total number of modifications shall be limited to 20% of the total number of I/O points.

2. All changes to each unique I/O point shall count as one modification. For example, modifying the description, range, or engineering units on an analog input shall count as one modification.

3. Analog input alarm limit definition shall not be counted as a modification.

B. I/O points shall be subject to review and modification by the Department during the shop drawing review phase. Points may be changed from SPARE to ACTIVE, with corresponding changes to the point data fields, with no increase in Project price, subject to the following limitations:

1. No more than 20 points may be changed from SPARE to ACTIVE points.

2. Points that are changed from SPARE to ACTIVE shall be the same type (i.e., changing a spare AI to an active AI).

3.02 INSTRUMENTATION NOMENCLATURE

A. Refer to the INSTRUMENTATION IDENTIFICATION SCHEDULE on the following page for use in referencing point and tag numbers.

INSTRUMENT IDENTIFICATION SCHEDULE

FIRST LETTER				SUCCEEDING LETTER		
	VARIABLE	MODIFIER		PASSIVE FUNCTION	OUTPUT FUNCTION	MODIFIER
A	Analysis			Alarm		Automatic
B	Breaker			User's Choice	Close or Stop	Bypass
C	Communications				Control	
D	Density	Differential			Open or Start	
E	Voltage (EMF)			Primary Element	Sensor	
F	Flow Rate	Ratio		Fail	Fail	Fail
G	Gauging			Glass		Local/Man./Hand
H	Hand					High or Open
I	Current			Indicate		Intermediate
J	Power	Scan				
K	Time	Time Rate			Control Station	
L	Level			Light		Low or Close
M	Motor	Momentary			Motor	Middle
N	User's Choice			Input	Forward	On or Operate
O					Off	Overload
P	Pressure	Pneumatic		Point (Test)	Position	
Q	Quantity of Event	Totalize			Emergency/Abnormal	
R	Radioactivity			Record or Print	Remote	Run
S	Speed or Frequency	Sum		Switch	Switch	Stop
T	Temperature				Transmit	
U	Multivariable			Multifunction	Multifunction	Multifunction
V	Variable or Viscosity				Valve or Damper	VFD/Valve
W	Weight or Force			Well		
X	Mod. Light or Valve			Unclassified	Unclassified	Unclassified
Y	Interlock				Relay or Compute	Reverse
Z	Position				Drive or Actuator	

3.03 PLC INPUT /OUTPUT POINT LIST

A. The Input/Output List reflects Pumping Station I/O requirements. I/O and memory point assignments shall be as listed herein and on the drawings. The I/O list contained herein shall be used to identify actual quantities of the various types of I/O cards required for the project.

TAG Name	Description	Card Slot	Point	Type	Data Field 1	Data Field 2	Remarks
	WASTEWATER PUMPING STATION						
					OFF STATE	ON STATE	
	DISCRETE INPUT						
SS-2A	PUMP 1 IN HAND MODE	1	0	DI		HAND	FROM PCP PUMP 1 H-O-A
SS-2B	PUMP 1 IN AUTO MODE	1	1	DI		AUTO	FROM PCP PUMP 1 H-O-A
TSH-101	PUMP 1 MOTOR WINDING HIGH TEMPERATURE	1	2	DI	NORMAL	ALARM	FROM PCP MOTOR CONNECTION
SFR-101	PUMP 1 SEAL FAIL	1	3	DI	NORMAL	SEAL FAIL	FROM SEAL MONITOR RELAY
ZSX-101	PUMP 1 PUMP CHECK VALVE STATUS	1	4	DI	CLOSED	OPEN	FROM CHECK VALVE PLC INPUT
LPB-1	PUMP 1 PUMP FAIL RESET	1	5	DI		RESET	FROM PCP LPB-1
MIR-101A	PUMP 1 SSRV RUNNING	1	6	DI	OFF	RUNNING	FROM PUMP 1 SSRV
MIF-101A	PUMP 1 SSRV FAULT	1	7	DI	NORMAL	ALARM	FROM PUMP 1 SSRV
MIR-101B	SPARE	1	8	DI			
MIF-101B	SPARE	1	9	DI			
SS-1	PUMP 1 REMOTE POSITION	1	10	DI	LOCAL	REMOTE	FROM PUMP 1 STARTER SWITCH
SS-1A	LEAD LAG PUMP SELECTION 1-2	1	11	DI	ALT	1-2	FROM PCP SS-1
SS-1B	LEAD LAG PUMP SELECTION 2-1	1	12	DI	ALT	2-1	FROM PCP SS-1
FS-1 (CR-DW)	DRY WELL LEVEL HIGH	1	13	DI	NORMAL	ALARM	FROM DRY WELL FLOAT
FS-2 (CR-AL)	FLOAT MODE STOP (LEVEL LOW)	1	14	DI	NORMAL	ALARM	FROM LOW WET WELL FLOAT
FS-3 (CR-AH)	FLOAT MODE START (HIGH LEVEL)	1	15	DI	NORMAL	ALARM	FROM HIGH WET WELL FLOAT
SS-3A	PUMP 2 IN HAND MODE	2	0	DI		HAND	FROM PCP PUMP 2 H-O-A
SS-3B	PUMP 2 IN AUTO MODE	2	1	DI		AUTO	FROM PCP PUMP 2 H-O-A
TSH-201	PUMP 2 MOTOR WINDING HIGH TEMPERATURE	2	2	DI	NORMAL	ALARM	FROM PCP MOTOR CONNECTION
SFR-201	PUMP 2 SEAL FAIL	2	3	DI	NORMAL	SEAL FAIL	FROM SEAL MONITOR RELAY
ZSX-201	PUMP 2 PUMP CHECK VALVE STATUS	2	4	DI	CLOSED	OPEN	FROM CHECK VALVE PLC INPUT
LPB-2	PUMP 2 PUMP FAIL RESET	2	5	DI		RESET	FROM PCP LPB-2
MIR-101A	PUMP 2 SSRV RUNNING	2	6	DI	OFF	RUNNING	FROM PUMP 2 SSRV
MIF-101A	PUMP 2 SSRV FAULT	2	7	DI	NORMAL	ALARM	FROM PUMP 2 SSRV

TAG Name	Description	Card Slot	Point	Type	Data Field 1	Data Field 2	Remarks
	SPARE	2	8	DI			
	SPARE	2	9	DI			
SS-2	PUMP 2 REMOTE POSITION	2	10	DI	LOCAL	REMOTE	FROM PUMP 2 STARTER SWITCH
GR-1	GENERATOR RUN	2	11	DI	OFF	RUNNING	FROM GENERATOR
GF-1	GENERATOR COMMON FAULT	2	12	DI	NORMAL	FAIL	FROM GENERATOR
CR-PFR	LOSS OF CONTROL POWER	2	13	DI	POWER FAIL	POWER ON	FROM PUMP CONTROL PANEL POWER LOSS
UV-101	LOSS OF STATION POWER	2	14	DI	POWER FAIL	POWER ON	FROM TRANSFER SWITCH 3 PHASE POWER LOSS
XFR-101	TRANSFER SWITCH POSITION	2	15	DI	COMMERCIAL	EMERGENCY	FROM TRANSFER SWITCH
	DISCRETE OUTPUT						
MC-101C	PUMP 1 PUMP REQUIRED	3	0	DO	OFF	REQUIRED	TO PCP (REQUIRED PL-8) & CR-1
MI-101A	PUMP 1 RUNNING	3	1	DO	OFF	RUNNING	TO PCP (RUNNING PL-9) & TO SCADA
MF-101A	PUMP 1 FAULT/LOCKOUT	3	2	DO	OFF	FAULT	TO PCP (FAILED LPB-1) & ALARM TO SCADA
TSH-101	PUMP 1 OVER TEMPERATURE	3	3	DO	OFF	OVER TEMP	TO PCP (OVER TEMP PL-5)
SFM-1	PUMP 1 SEAL FAIL	3	4	DO	OFF	SEAL FAIL	TO PCP (SEAL FAIL PL-4)
MF-101B	PUMP 1 ALARM	3	5	DO	OFF	ALARM	FROM PCP ALARM TO SCADA
NF-110	PLC FAIL	3	6	DO	NORMAL	ALARM	FROM PCP ALARM TO SCADA
CF-111	COMMUNICATIONS FAIL	3	7	DO	NORMAL	ALARM	FROM PCP ALARM TO SCADA
UV-110	POWER FAIL	3	8	DO	NORMAL	ALARM	FROM PCP ALARM TO SCADA
LSH-101	FLOAT MODE START	3	9	DO	NORMAL	ALARM	FROM PCP ALARM TO SCADA
LSL-101	FLOAT MODE STOP	3	10	DO	NORMAL	ALARM	FROM PCP ALARM TO SCADA
	SPARE	3	11	DO			
	SPARE	3	12	DO			
	SPARE	3	13	DO			
	SPARE	3	14	DO			
	SPARE	3	15	DO			
MC-201C	PUMP 2 PUMP REQUIRED	4	0	DO	OFF	REQUIRED	TO PCP (REQUIRED PL-10) & CR-2
MI-201A	PUMP 2 RUNNING	4	1	DO	OFF	RUNNING	TO PCP (RUNNING PL-11) & TO

TAG Name	Description	Card Slot	Point	Type	Data Field 1	Data Field 2	Remarks
							SCADA
MF-201A	PUMP 2 FAULT/LOCKOUT	4	2	DO	OFF	FAULT	TO PCP (FAILED LPB-2) & ALARM TO SCADA
TSH-201	PUMP 2 OVER TEMPERATURE	4	3	DO	OFF	OVER TEMP	TO PCP (OVER TEMP PL-7)
SFM-2	PUMP 2 SEAL FAIL	4	4	DO	OFF	SEAL FAIL	TO PCP (SEAL FAIL PL-6)
MF-201B	PUMP 2 ALARM	4	5	DO	OFF	ALARM	FROM PCP ALARM TO SCADA
GR-1	GENERATOR RUN	4	6	DO	NORMAL	ALARM	ALARM TO SCADA
GF-1	GENERATOR FAIL	4	7	DO	NORMAL	ALARM	ALARM TO SCADA
XFR-101	ATS EMERGENCY POSITION	4	8	DO	NORMAL	ALARM	ALARM TO SCADA
	SPARE	4	9	DO			
	SPARE	4	10	DO			
	SPARE	4	11	DO			
	SPARE	4	12	DO			
	SPARE	4	13	DO			
	SPARE	4	14	DO			
	SPARE	4	15	DO			
	ANALOG INPUT						
LI-100	WET WELL LEVEL	5	0	AI	4-20 mA	0-35.6 FEET	FROM LE/LT-100
PI-200	FORCE MAIN PRESSURE	5	1	AI	4-20 mA	0-100 PSI	FROM PE/PT-200
	SPARE	5	2	AI	4-20 mA		
	SPARE	5	3	AI	4-20 mA		
	ANALOG OUTPUT						
PUMP-1C	PUMP 1 LOAD CURRENT	6	0	AO	4-20 Ma	0-XXX	TO SCADA (VALUE TO BE DETERMINED)
PUMP-2C	PUMP 2 LOAD CURRENT	6	1	AO	4-20 Ma	0-XXX	TO SCADA (VALUE TO BE DETERMINED)
	SPARE	6	2	AO			
	SPARE	6	3	AO			

END OF SECTION

This page intentionally left blank.

SECTION 13348

CS-SS STATION CONTROL SYSTEM DESCRIPTION

PART 1 - GENERAL

1.01 DESCRIPTION:

A. These Constant Speed Soft Start (CS-SS) specifications are intended to be used for wastewater pump stations fifteen (15) horsepower and greater in the City of Suffolk, Virginia.

B. This section includes the requirements for programming the PLC and OIT for monitoring, operation and control of the pump station as well as interfacing with the City's SCADA system. All work specified herein shall be performed by the Department's designated representative for programming. This section is provided as a guideline to ensure that the Programmable Logic Controller and Operator Interface Terminal provided by the Control System Integrator are adequate to allow programming as specified herein.

1.02 ABBREVIATIONS:

CSI	Control Systems Integrator
I/O	Input / Output
OIT	Operator Interface Terminal
PLC	Programmable Logic Controller
PCP	Pump Control Panel
UL	Underwriters Laboratory
UPS	Uninterruptible Power Supply
TVSS	Transient Voltage Surge Suppressor
EEPROM	Electrically Erasable Programmable Read Only Memory

1.03 QUALITY ASSURANCE

A. The CSI shall demonstrate to the Department, prior to beginning the work, that the CSI has qualified staff available to develop the required control system and documentation, and shall demonstrate that such staff has experience with working with the programming software being used on the Project.

1.04 SUBMITTALS

A. The CSI shall submit the name or names of the persons who will be responsible for coordinating with the Department's programming representative for the PLC and OIT.

PART 2 – PRODUCTS

Not Used

PART 3 – EXECUTION

3.01 GENERAL:

A. The CSI shall utilize the control descriptions described herein, as well as the Instrumentation drawings, and the I/O list contained in Section 13345, CS-SS Input/Output Point List to develop drawings for the PLC, the OIT and connections to the SCADA System. The PLC, OIT and SCADA System programming will be by the Department's designated representative. The programs, working in conjunction with one another, shall constitute a comprehensive monitoring and control system for the pump station.

B. The control descriptions contained herein are intended to provide the minimum amount of detail for programming of the operational modes of control, with emphasis on automatic control modes.

C. Programming code and databases shall be developed for all I/O listed in referenced I/O list, regardless of whether or not the point is included in the control descriptions.

D. Abbreviations:

1. The following abbreviations with corresponding definitions are used in the control descriptions, and pertain directly to the OIT and PLC unless otherwise noted:

a. AUTO: Control mode selected at OIT whereby PLC logic functions control operation of equipment or system

b. MANUAL: Control mode selected at OIT whereby operator manual input controls operation of equipment or system

c. ICON: Symbol representing a piece of equipment, functions, or commands on a pictorial display on the OIT

d. LOCKOUT: A piece of operating equipment such as a pump or fan that is selected at the OIT for being locked out from an operating sequence. This allows the particular piece of equipment to be overlooked in the operating sequence so that its lack of operation does not cause an alarm to be generated.

e. PCP: Pump Control Panel

E. Alarms:

1. Provide a means via the OIT to acknowledge an alarm in the system. The alarm shall not cease until the alarm is acknowledged, the alarm condition ceases, and the main reset pushbutton on the OIT has been depressed for reset.

2. A PLC hardware problem or fault shall constitute an alarm that shall be transmitted to the City's SCADA system.

3. Each alarm shall be provided with a timing function that can be set via the OIT alarm set point screen.

F. Operator Adjustments:

1. The PLC and OIT programs shall allow for the following:

a. Adjustment of alarm settings derived from analog signals from the OIT.

b. Time delay functions for each alarm point, with capability of adjusting timing functions from the OIT.

c. Acknowledgement and resetting of alarm signals via the OIT.

d. Time and date on each display screen

e. PLC fail signal output using monitoring of PLC time clock for each PLC

f. Security levels and corresponding security access codes for PLC programs and for operator selections on OIT screens.

g. Capability for selecting individual pieces of equipment for disabling at the OIT such that the equipment is not called to operate, and alarms associated with the equipment will not be generated.

h. Timing functions to delay re-starting of equipment when power is transferred from normal to standby, and on re-transfer of power. Timing functions shall be provided to stagger re-starting of the wastewater pumps: Pump-1, and Pump-2. Timing functions shall also apply to re-transfer to normal power if equipment loads drop

off line during re-transfer.

i. Alarms for loss of level transmitter signal.

3.02 CONTROL DESCRIPTIONS – WASTEWATER PUMPS (PUMP 1, PUMP 2):

A. Manual and automatic pump control:

1. General

a. Pumps shall normally operate in an automatic mode with stop/start and speed control via the PLC. Control panel PCP will be provided with a Hand-Off-Auto selector switch for each pump and the SSRV's will be provided with a "Local – Off – Remote" selector switch to select either local or remote control of the SSRV and corresponding pump. The pumps will normally operate with the switches selected for Remote.

1) SSRV Local Mode: Pump is started locally at the SSRV. The SSRV will also be provided with a door mounted keypad. Local mode by-passes the PLC control of the SSRV and all permissive signals.

2) SSRV Remote Mode: Start/stop signals shall be transmitted from the PLC to the SSRV's. In the Auto Mode (PCP) the pump shall be controlled from the PLC/OIT normal sequence of operation, pump may also be started by the redundant high level and low level float switches connected to panel PCP. The SSRV's associated with each pump will normally be selected for "Remote" mode at the SSRV and Auto mode at the Pump Control Panel PCP.

3) SSRV Remote Hand Mode: "Hand" mode at the Pump Control Panel PCP will by-pass the PLC normal sequence of operation.

b. The pumps shall normally operate in an alternate pump configuration.

2. Pump Control Modes – PLC and OIT

a. Two control modes shall be selectable at the OIT for each individual pump as follows:

1) Full Manual
2) Full Automatic

b. In Full Manual mode, the pump start/stop for the individual pump may be manually selected at the OIT or the control panel PCP by the operator.

c. In the Full Automatic mode, the pumps shall operate based on the automatic control scheme described herein for Automatic Control for both start and stop.

3. Automatic Control - Pump Selection:

a. The OIT shall be provided with the capability to display the pump sequence assignment to be made in lead/lag through selector switch on PCP. The starters shall be selected for "Auto" at the Starter, and the 1-2, ALT, 2-1 switch shall be selected for one of the pump assignments as described below.

b. The pump assignments shall be capable of being changed via the selector switch on PCP. Distinct selections for pump operation shall be provided on the selector switch on PCP as follows:

1) Fixed (1-2 or 2-1 pump selection).
2) Automatic Alternation (ALT)

c. When the Fixed mode is selected, the pump assignment (lead or lag) shall remain stationary until new assignments are made by an operator by placing the 1-2, ALT, 2-1, selector switch on PCP in a new position. Changing of the pumping assignments shall only take place when all pumps are stopped.

d. In the Automatic Alternation mode (ALT), the pump assignments (lead or lag) shall automatically alternate each time the lead pump starts and then stops, shifting sequentially such that the lead pump next becomes the lag pump, and the lag pump then becomes the lead pump.

e. Changes made during pump operation shall be implemented automatically. If a change is made to pump assignments during pump operation, a notation shall be displayed on the OIT that a change has been made, and the pump assignments for the current operating scheme shall be displayed on the OIT. The pump in operation at the time of the change shall be ramped down to stop. Once the operating pump is stopped the new pump assignment

shall be assumed; the new lead pump shall start and the new operating sequence shall continue until changed.

4. Automatic Control – Stop, and Start:

a. There shall be at least four (4) level settings used in the stop, start control of the pumps. The level settings are as indicated on the Instrumentation Drawings or as directed by the Department. The level settings are based on the level transducer signal input to the PLC, and are as follows, in order of ascending elevation:

1) Level sensor (transducer) 1 foot from bottom of wet well.
2) Low Water Level Alarm (Set Point) _____Feet
3) Float Mode Stop Level (Float) _____Feet
4) All Pumps Stop (Stop Set Point) _____ Feet
5) Lead Pump Start (Start Lead Set Point) _____ Feet
6) Lag Pump Start (Start Lag Set Point) _____Feet
7) Float Mode Start Level (Float) _____Feet
8) High Water Level Alarm (Float) _____Feet

b. Each level setpoint shall be individually adjustable at the OIT by the operator. <u>This operation shall be password protected.</u>

c. On rising level, the pump selected for lead pump shall start at the Start level.

d. If the lead pump is running and the wet well level rises to the lag pump start level, the pump selected for lag will start.

e. On falling level, when the wet well level drops to the all pumps stop level set point, all pumps shall decelerate to stop.

5. Automatic Fail Over:

a. If a pump fails to start when required, or a fault occurs during operation, an alarm shall be generated and the next pump in the sequence shall start and take the place of the failed pump. The failed pump shall be locked out of operation until the alarm has been reset at the PCP/OIT, and the PLC shall not allow the pump to be started in the “Auto” mode while the alarm condition exists.

6. Pump Over Temperature:

a. Upon sensing a pump over temperature condition in the pump, the

control system shall cause the pump to stop operating, lockout the pump until reset and index to the next pump in the sequence. The pump over temperature light shall be illuminated and the OIT shall display pump over temperature alarm for the affected pump until reset.

b. A pump failure alarm shall be generated and sent to the SCADA system for transmission and alarming at the Water Treatment Plant.

7. Pump Seal Failure:

a. Upon sensing a pump seal fail condition the control system shall cause a seal failure light to be illuminated. The light shall remain illuminated until the condition is cleared. The condition shall not require the pump to stop operating.

8. Failure to Pump:

a. A proximity switch shall be installed on the check valve to detect movement of the check valve swing arm. When a pump is required to operate and any time during the pump operation, if the check valve fails to open or remains closed for a preset time a Pump Flow Failure Alarm shall be displayed on the OIT for the affected pump until reset. Pump fail time shall be determined and set during start up. The condition shall not require the pump to stop operating.

9. Pump LOCKOUT:

a. The capability shall be provided at the OIT to select a pump for LOCKOUT. When selected for LOCKOUT, the particular pump shall not be capable of being selected in the pump control, and shall not be available for operation via the PLC and OIT. Pump LOCKOUT shall be located on the CONTROL Set Point Screen. The LOCKEDOUT pump shall display LOCKEDOUT on the corresponding Pump-1 or Pump-2 screen.

B. Wet well level and force main signals:

1. Displays:

a. The wet well level signal will be transmitted to the PLC and shall be displayed on the OIT and the digital level display; the signal will be a 4-20 mA signal proportional to the water level in the wet

well.

b. The force main pressure signal will be transmitted to the PLC and shall be displayed on the OIT and the digital pressure display; the signal will be a 4-20 mA signal proportional to the force main pressure.

2. Signal Failure and Loss of Signal:

a. Should the PLC sense a level signal failure such as a reading outside of the boundary of the 4-20 mA signals, or a loss of a level signal, an alarm shall be generated, and transmitted to the OIT and SCADA System.

b. Should the level transmitter signal fail, the PLC shall automatically shift the pump control mode to the float switch back up mode.

c. Should the level in the wet well fall to the low wet well level alarm point, as indicated on the Instrumentation Drawings, then an alarm shall be generated on the OIT, and transmitted to the SCADA System. The low wet well float switch shall be used for an auxiliary pump stop in the event pump does not stop on a normal falling level transmitter signal.

d. Float switch backup mode shall operate between the Float Mode Start level float and the Float Mode Stop level float until the analog level signal is restored and the backup mode is released/reset through the OIT. Should the high level alarm float be reach while the level transmitter is within its normal operating range, the PLC shall operate as if the level transmitter has failed and switch to the float switch back-up mode until reset.

e. The OIT shall indicate when the station is operating in Float or Level Modes.

C. Loss of communication signal and plc failure:

1. In the event of a PLC failure or fault, an alarm shall be generated and transmitted to the SCADA System. During a PLC failure or fault the motor starters shall be operable from the HAND-OFF-AUTO switch.

D. Station Alarms

1. Any alarm generated by the PLC or received as an input to the PLC shall be displayed on the OIT and/or transmitted to the SCADA System as

summarized in Table-1.

Table 1 – STATION ALARMS

Alarm	OIT	SCADA	Remarks
PUMP 1 - OVER TEMPERATURE ALARM	YES	YES	PUMP 1 FAIL (SHUTDOWN)
PUMP 1 - SEAL FAIL ALARM	YES	YES	PUMP 1 FAULT (ALARM)
PUMP 1 - FLOW FAIL ALARM (PUMP 1 FAIL TO START)	YES	YES	PUMP 1 FAULT (ALARM)
PUMP 1 - SSRV STARTER FAULT ALARM	YES	YES	PUMP 1 FAIL (SHUTDOWN)
PUMP 1 - NOT IN AUTO ALARM	YES	NO	
PUMP 1 - FAIL TO RUN ALARM	YES	YES	PUMP 1 FAIL (SHUTDOWN)
PUMP 1 - LOCKED OUT BY HMI SCREEN PUSHBUTTON	YES	YES	PUMP 1 FAIL (SHUTDOWN)
PUMP 2 – OVER TEMPERATURE ALARM	YES	YES	PUMP 2 FAIL (SHUTDOWN)
PUMP 2 - SEAL FAIL ALARM	YES	YES	PUMP 2 FAULT (ALARM)
PUMP 2 - FLOW FAIL ALARM (PUMP 2 FAIL TO START)	YES	YES	PUMP 2 FAULT (ALARM)
PUMP 2 - SSRV STARTER FAULT ALARM	YES	YES	PUMP 2 FAIL (SHUTDOWN)
PUMP 2 - NOT IN AUTO ALARM	YES	NO	
PUMP 2 - FAIL TO RUN ALARM	YES	YES	PUMP 2 FAIL (SHUTDOWN)
PUMP 2 - LOCKED OUT BY HMI SCREEN PUSHBUTTON	YES	YES	PUMP 2 FAIL (SHUTDOWN)
FLOAT MODE START (From float switch via PLC)	YES	YES	
FLOAT MODE STOP (From float switch via PLC)	YES	YES	
WET WELL LEVEL SENSOR FAILURE	YES	NO	
ATS EMERGENCY POSITION	YES	YES	
GENERATOR FAULT ALARM	YES	YES	
DRY WELL HIGH LEVEL ALARM	YES	YES	
PLC FAIL	NO	YES	

END OF SECTION

This page intentionally left blank.

SECTION 13401

CS-SS STATION SCADA SYSTEM

PART 1 - GENERAL

1.01 DESCRIPTION

A. These Constant Speed Soft Start (CS-SS) specifications are intended to be used for wastewater pump stations fifteen (15) horsepower and greater in the City of Suffolk, Virginia.

B. This Section includes requirements for the furnishing, installation and testing of the SCADA system at the pump station. SCADA equipment and components shall be furnished by the CSI unless otherwise specified.

C. Monitoring of the pump station operation and equipment and alarm status shall be accomplished using hard wired I/O connected to the PCP, equipment, and other instrumentation.

1.02 SUBMITTALS

A. Shop drawings shall be submitted for all items in accordance with Section 01301 CS-SS Station Submittals and as specified herein. Items for which shop drawings shall be submitted shall include, but not be limited to, the following:

1. Catalog data, mounting details, wiring connection diagrams, and manufacturer's installation instructions.

2. Operation and maintenance manuals.

PART 2 – PRODUCTS

2.01 SCADA UNIT

A. Telog RS-3330 with 30 channels.

B. 1xV cellular modem with antenna.

C. See Instrumentation drawings for required SCADA system signals.

D. See Telog Termination Diagram provided as a SUPPLEMENT to this Section.

2.02 SCADA UNIT POWER SUPPLY WITH BATTERY BACK-UP

A. Power supply for SCADA unit shall be provided.

B. Power supply shall convert 120VAC, 60Hz power to 12VDC power with sufficient voltage regulation and ripple control to assure that instruments being supplied are operating within their required tolerance.

C. Output over voltage and over current protective devices shall be inherent in power supplies to protect instruments from damage due to power supply failure and to protect the power supply from damage due to external failure.

D. Manufacturer and model: Telog AC12B4

2.03 SCADA UNIT ENCLOSURE

A. Provide single enclosure for SCADA unit, power supply, and battery.

B. Enclosure for interior installation shall have the following features:

1. Enclosure shall be thermoplastic NEMA 4X.
2. Hinge and 2-point latching

2.04 DOOR ENTRY MONITORING SYSTEM (DEMS)

A. Telog DEMS-RECP. Wall-mounted box with dongle key receptacle.

B. SENTROL Model 1085T door switch, normally open.

PART 3 – EXECUTION

3.01 INSTALLATION

A. Install as described herein, as shown on the Drawings, and in accordance with the manufacturer's requirements. Route conduit and wire I/O from PCP, equipment, and instrumentation to SCADA Unit in a neat and professional manner.

B. All wire connections to the Telog Unit shall be labeled to identify the incoming signal utilizing descriptive labeling, in English.

C. SCADA Unit, Power Supply, and Battery

1. Install in SCADA Unit enclosure. Route 120V power conduit and wire from local power panel.

2. Provide the ESN (electronic serial number) for the Telog modem at least fourteen (14) calendar days prior to testing of the SCADA system so that the Department can have the cellular provider assign the cell account to the unit with a static IP address.

D. SCADA Unit Enclosure

1. Wall-mount in the inside of the pump station adjacent to PCP. Mount cellular antenna to the exterior of the enclosure by screwing onto a bulk head fitting on the top of the enclosure.

E. DEMS

1. Wall-mount DEMS-RECP in the inside of the pump station adjacent to the door. Mount door switch on main entry door.

3.02 TESTING

A. Test all device alarm points after all devices, machines and systems which are equipped to initiate alarms have been installed, tested and approved. Prior to testing data transmission described below, submit checklist documenting each signals and alarms have been successfully tested from their source to the Telog Unit for the 30 I/Os of the Telog (if the signal is not used or is a spare indicate this by 'N/A'. The checklist shall have a list of each Telog signal and the date, time, and person who tested each signal as correctly being received at the Telog (printed name and signed). Final verification of the Telog to ensure it is receiving signals via the cell phone system will not be tested until the checklist has been completed and signed off.

B. Provide a minimum of fourteen (14) calendar days written notice before testing of the City's SCADA System. The Department will establish cellular communications with the SCADA Server and program the SCADA Unit.

C. After all signals and alarms have been successfully tested and fourteen (14) calendar days notice has been provided, test and confirm data transmission between the PCP, equipment, and instrumentation and the City's SCADA System. Correct any signals or alarms that are not interfacing correctly with Telog unit and assist Department and Engineer as necessary to start up system.

D. Coordinate with the Department and Engineer to test all alarm signals, status signals, and analog signals connected to the SCADA System for presentation on the Department's display and alarm notification devices. Any alarms, status signals or analog signals that are not found to be operational shall be retested until satisfactory results are accomplished.

PART 4 – SUPPLEMENT

4.01 Telog Termination Diagram.

Notes:

1. SIGNALS 3 AND 4 ARE ONLY USED FOR STATIONS WITH VFD'S.
2. SIGNAL 11 IS ONLY USED FOR STATIONS WITH RAIN GAUGES.
3. SIGNALS 21 AND 22 ARE ONLY USED FOR STATIONS WITH PERMANENT EMERGENCY GENERATORS.
4. SIGNAL 24 IS ONLY USED FOR STATIONS WHEN PUMPS ARE LOCATED IN A DRY WELL.

Telog_IO_Wiring_346716.jpg, Rev 09/29/2014

END OF SECTION

SECTION 13421

CS-SS STATION INSTRUMENTATION

PART 1 - GENERAL

1.01 DESCRIPTION

A. These Constant Speed Soft Start (CS-SS) specifications are intended to be used for wastewater pump stations fifteen (15) horsepower and greater in the City of Suffolk, Virginia.

B. This Section includes requirements for field instrumentation to be installed throughout the pump station as well as control stations and controls for installation in control panels, and miscellaneous instruments and controls not specified elsewhere. All equipment and components shall be furnished by the CSI unless otherwise specified.

1.02 SUBMITTALS

A. Shop drawings shall be submitted in accordance with Section 01301 CS-SS Station Submittals for all items specified herein. Items for which shop drawings shall be submitted shall include, but not be limited to, the following:

1. Wet Well level sensor/transmitters (level transducer) and Force Main pressure transmitter, including catalog data, mounting details, wiring connection diagrams, and manufacturer's installation instructions. Provide catalog data on the surge protection to be provided with the transmitters, as well as catalog data for the intrinsically safe barrier relay to be provided with the transmitter.

2. Provide certified factory calibration report for Force Main Pressure Transmitter assembly.

3. Catalog information on the following equipment and controls:

   a. Wet Well Level Sensor/transmitter
   b. Force Main Pressure Transmitter
   c. Wet Well Level Indicator
   d. Force Main Pressure Indicator

4. Provide operation and maintenance manuals for the following items:

   a. Wet Well Level transmitter
   b. Force Main Pressure transmitter
   c. Wet Well Level Indicator

d. Force Main Pressure Indicator

5. Field calibration reports shall be provided for the post installation calibration of the force main pressure transmitter, digital indicators and the level transmitter.

1.03 MANUFACTURER'S INSPECTION AND START-UP

A. The Contractor shall furnish and coordinate the services of all instrumentation manufacturers' qualified field representatives to supervise the installation, inspect the equipment after installation, and monitor the initial operation for a minimum of one eight (8) hour workday. The manufacturers' representatives shall supervise the final field calibration of the instruments.

1. Wet Well level transmitter, Force Main pressure transmitter and digital indicators combined.

PART 2 – PRODUCTS

2.01 WET WELL TRANSMITTER (SUBMERSIBLE)

A. The level transmitter shall be the submersible pressure sensing type constructed of a piezoresistive pressure cell fitted into a Type 316 stainless steel package with integral monolithic Kynar diaphragm with Type 316 stainless steel housing. The output shall be a 4-20 mA analog signal directly proportional to the level of water submerging the transducer. The level transmitter shall be loop powered two-wire and have integral built-in lightning protection as a standard product.

B. A suitable power supply for the level transmitter shall be supplied.

C. The transmitter level range shall be 0-15 psig (0-34.6 feet H2O). The transmitter shall be located in the wet well in a 6" PVC stilling well so as not to suffer damage from turbulence. Stilling well shall be attached to the wet well wall with Type 316L stainless steel bands and fasteners not less than 3 feet apart over the length of the stilling well. Level transmitter shall be furnished with a watertight vented Tefzel jacketed cable to support the transmitter without additional cabling. The transmitter shall comply with NEMA 6P and IP68 requirements for submersion up to 900 feet. The transmitter cable shall be continuous without splices from the transmitter to PCP terminal blocks. A conduit shall be supplied for the transducer once the cable exits the Hazardous Location. Provide length of cable as required to connect the transmitter to the PCP. Provide 1" conduit for transmitter cable between the wet well junction box and PCP.

D. An aneroid bellows shall be furnished with the transmitter for attaching to the vent tube for atmospheric pressure change compensation. Desiccant vent filters will not be allowed.

E. The transmitter and cable shall be suitable for installation in a Class I, Division 1, Group D, Hazardous (Classified) Location. An intrinsically safe barrier relay shall be provided to create an intrinsically safe circuit for the transducer. The barrier relay shall be compatible with the transmitter provided, and shall be approved by the transmitter manufacturer for use with the transmitter.

F. Level transmitter shall be Factory Mutual Certified type Birdcage BC001-01002AA/CT-FM intrinsically safe submersible liquid level transmitter, as manufactured by Blue Ribbon, Grand Island, NY or model 750 as manufactured by Esterline KPSI, Hampton, Virginia.

2.02 FORCE MAIN PRESSURE TRANSMITTER

A. The force main discharge pressure sensor shall be of 1” threaded tap mounted type, suitable for raw sewage at 0-2 percent solids. The sensor shall be designed to isolate pipe line media from integral instrumentation and shall be located as shown on the Project Drawings. The sensor shall be equipped with a minimum 4-inch diameter dual scale liquid filled Type 316 stainless steel housing pressure gauge and a non-indicating pressure transmitter. Pressure gauge and pressure transmitter shall be suitable for the pressure range specified. Pressure transmitter is to be wired to the control panel to display discharge pressure on the digital pressure indicator and through the PLC’s GUI and to the SCADA System transmitter. The pressure sensor assembly shall consist of a Type 316 stainless steel body with threaded end connections, flexible Viton^{tm} element acting upon a DC200 silicon fluid fill, transferring pressure to the transmitter/gauge assembly. Assembly shall include 1” bronze corporation stop, 1” Onyx annular ring, 1” Type 316 stainless steel ball valve, 1” female CamLok fitting, pressure gauge and pressure transmitter as shown in drawing at the end of this Section or as detailed on the plans. Pressure sensor assembly with all components shall be fully assembled, filled, and calibrated at the factory. Submit certified factory calibration data for the pressure transmitter assembled components.

B. The pressure sensor shall be a 1” annular ring as manufactured by Onyx.

C. Pressure transmitter shall be Model 27 range 0-100 psig with surge protection and two wire 4-20 mA output as manufactured by KPSI.

D. Pressure gauge shall be 0-50 psig for lift stations and 0-100 psig for stations pumping into force mains; ½” bottom feed 4-½”, liquid-filled, Ashcroft.

2.03 DIGITAL INDICATORS

A. Wet Well Level and Force Main Pressure digital indicators shall be a high performance, easy to use, industrial grade microprocessor-based digital process meters. The indicator shall accept all standard process signals (4-20 mA, 1-5 V, & 0-10 V) and displays these signals in engineering units on a 4½ digit display. The indicator shall be equipped with an isolated 4-20 mA output signal option. The indicator shall be programmable to produce a 4-20 mA output for virtually any input. The 4-20 mA output signal may be powered either by an internal or an external power supply.

B. The digital indicators shall be NEMA 4X, IP65 front panel rated and the NEMA 4X, IP65 front panel does not restrict access to the setup buttons.

C. Digital Indicators shall be UL-508 Listed.

D. Digital Indicators shall be type PD690, as manufactured by Precision Digital Corporation.

2.04 LOOP ISOLATOR

A. Analog signal isolator shall provide optical isolation between input and output stages of the isolator. Isolation shall be 1500 Volts AC peak minimum (250 V AC or 354 V DC continuous). Input and output channels shall be galvanic isolated.

B. Analog signal isolator shall be signal channel input with signal or dual output as necessary.

C. Analog isolator shall be 24 Volt DC powered and be UL Listed.

D. Analog isolator shall be Acromag, AGM.

2.05 SPECIALTIES

A. Instrument Tags: Provide engraved Type 316L stainless steel instrument tags with Type 316L stainless steel attachment chains for field instrumentation. Where instrument is submerged, provide tag at convenient location along cable or cord where it is readily accessible.

2.06 SPARE PARTS

A. The following spare parts shall be provided for instrumentation equipment:

1. Submersible Level Transducer: Provide one spare submersible level transducer, with cable length same as the installed transducers.

2. One digital indicator to match device provided.

PART 3 - EXECUTION

3.01 INSTALLATION

A. Install all instrumentation in accordance with the manufacturer's recommendations and as shown on the Project Drawings and as specified herein.

3.02 TESTING

A. The CSI shall be responsible for testing all control panels, instrumentation and controls that were furnished by the CSI. The CSI and the Contractor shall calibrate, operate, adjust and test all controls and instrumentation to assure complete and satisfactory installation and performance. All necessary test equipment shall be provided by the Contractor. The Contractor shall make all necessary changes and adjustments to equipment, all at no added cost to the Department.

1. Test all device alarm points after all devices, machines and systems which are equipped to initiate alarms have been installed, tested and approved.

2. Provide documentation in writing that test equipment has a current calibration certificate not less than six months old at time of instrumentation commissioning. Calibration shall be by a testing laboratory that is traceable to the NIST.

END OF SECTION

This page intentionally left blank.

SECTION 16481

CS-SS STATION SOLID STATE REDUCED VOLTAGE STARTER

PART 1 - GENERAL

1.01 SUMMARY

A. These Constant Speed Soft Start (CS-SS) specifications are intended to be used for wastewater pump stations fifteen (15) horsepower and greater in the City of Suffolk, Virginia.

B. Section includes:

1. Solid State Reduced Voltage Starter

1.02 ABBREVIATIONS

CSI Control Systems Integrator
I/O Input/Output
OIT Operator Interface Terminal
PLC Programmable Logic Controller
PCP Pump Control Panel
UL Underwriters Laboratory
UPS Uninterruptable Power Supply
TVSS Transient Voltage Surge Suppressor
NEC National Electric Code
ISA International Society of Automation
NEMA National Electric Manufacturers Association

1.03 QUALIFICATIONS

A. Manufacturer

1. The manufacturer shall have a minimum of 15 years experience in the manufacturer of solid state reduced voltage controllers.

2. The approved manufacturers are:
   a. Shall be as shown on the City's approved products list
   b. Substitutions: None permitted

B. Support

1. The manufacturer shall maintain factory trained and authorized service facilities within 50 miles of the project and shall have a demonstrated record of service for at least the previous ten years.

2. Support personnel are to be factory trained and authorized representatives of the manufacturer.

3. The manufacturer shall provide all required start-up and training services.

C. Certification

1. To insure all quality and corrective action procedures are documented and implemented all manufacturing locations shall be certified to the ISO-9001 Series of Quality Standards.

1.04 REFERENCES

A. The controller shall be designed to meet the applicable requirement of:
1. UL
2. CSA and/or CUL
3. NEMA
4. IEEE

B. These standards shall include

1. Creep distances and clearances 600V (UL/CSA)

2. Dielectric withstand per UL508

3. Noise and radio frequency (RF) immunity per NEMA ICSA1-109

4. Surge withstand per IEEE587 or IEEEC62.41

1.05 ENVIRONMENTAL REQUIREMENTS

A. Confirm to specified service conditions during and after installation of products.

B. Maintain area free of dirt and dust during and after installation of products.

1.06 PRE-MANUFACTURE SUBMITTALS

A. Refer to Section 01301 for submittal procedures.

B. Shop Drawings

1. Elevation drawings showing dimensional information

2. Structure Descriptions showing

a. Enclosure ratings
b. Fault ratings
c. Other information as required for approval

3. Conduit locations

4. Unit Descriptions including amperage ratings, frame sizes, trip settings, pilot devices, etc.

5. Nameplate Information

6. Schematic wiring diagrams

C. Product Data

1. Publications on solid state reduced voltage controller.

2. Data Sheets and Publications on all major components.
   a. Contactors
   b. Circuit Breaker and Fuse information including time current characteristics
   c. Control Power Transformers
   d. Pilot devices
   e. Relays

D. Specification Response

1. Detailed response to this specification showing where in the literature each requirement is satisfied.

2. All clarifications and exceptions shall be clearly identified.

E. Testing and Test Reports

1. Testing shall be per manufacturer's standard.

2. A copy of the test reports shall be provided as part of the Closeout documentation.

1.07 CLOSEOUT SUBMITTALS

A. Refer to Section 01301 for procedure on submittal of closeout documentation.

B. Contractor shall provide certification that the solid state reduced voltage controller has been installed in accordance with the manufacturer's instructions.

C. The Contractor shall provide certification that the Contractor has properly adjusted any timing devices required in the starting circuitry.

D. Final Drawings. The manufacturer shall provide final drawings reflecting the "As-Shipped" status of the installed equipment. The Contractor shall be responsible

for making any changes to the "As-Shipped" drawings from the manufacturer to reflect any field modifications.

E. Maintenance Data

1. Solid state reduced voltage controller installation instructions and User Manual.

2. Installation / Operation instructions for major components such as circuit breakers, contactors, etc.

3. Parameter Listing

4. Field Service report from start-up service.

5. Solid state reduced voltage controller spare parts listing and pricing.

6. Include name and phone number for a local distributor for the spare parts.

1.08 DELIVERY, STORAGE AND HANDLING

A. Contractor shall coordinate the shipping of equipment with the manufacturer.

B. Contractor shall store the equipment in a clean and dry space.

C. The Contractor shall protect the units from dirt, water, construction debris and traffic.

D. During storage the Contractor shall connect internal space heaters (if specified) with temporary power.

1.09 FIELD MEASUREMENTS

A. The Contractor shall verify all field measurements prior to the fabrication of the solid state reduced voltage controller.

1.10 SPARE MATERIALS

A. Provide one (1) set of three (3) of each size power fuse utilized.

B. Provide spares equal to ten (10) percent of the installed quantity for primary and secondary control power fuses.

C. Provide one (1) spare control relay for each unique relay utilized on the project.

1.11 WARRANTY

A. All equipment furnished under this section shall be warranted for parts and labor on site by the contractor for a period of one (1) year from date of acceptance by the Department and the equipment manufacturers for a period of five (5) years after acceptance by the Department.

B. The manufacturer shall confirm this warranty as part of the submittal.

C. This warranty applies only to stand alone solid state reduced voltage controllers.

PART 2 - PRODUCTS

2.01 MANUFACTURER

A. Manufacturer shall be as shown on the City's approved products list.

2.02 RATINGS

A. The solid state reduced voltage controller shall accept an input voltage of 240 or 480 VAC as applicable to the installation, three phase plus or minus 10 percent.

B. Environmental Ratings

1. Storage ambient temperature range: -20 to 75 degrees C.

2. Operating ambient temperature range:
   a. Open chassis 0 to 50 degrees C.
   b. Enclosed units 0-40 degrees C.

3. The relative humidity range: 5% to 95% non-condensing.

4. Operating elevation: up to 1000 Meters.

C. Definitions

1. The Solid State Reduced Voltage Controller Unit shall refer to the actual controller unit that will be mounted within the specified enclosure.

2. The Solid State Reduced Voltage Controller System shall refer to the controller unit and all items specified under Controller System Options.

2.03 SOLID STATE REDUCED VOLTAGE CONTROLLER UNIT DESIGN

A. The open-type controller device shall be modular, consisting of a power structure and a logic component.

B. Power Structure

1. The power structure shall include an SCR bypass.

2. The power structure shall include a built-in overload.

3. For ratings 1 Amps to 1250 Amps, the power structure shall consist of three power poles with integral heatsinks.

4. Back-to-back SCR pairs shall be the only power switching semiconductor means acceptable. Diode-SCR (Silicon Controlled Rectifier) combinations shall not be acceptable.

5. SCR's shall have the following minimum repetitive peak inverse voltage ratings.
   a. 1400V for units rated 200 to 480V
   b. 1600V for units rated 200 to 600V
   c. 1800V for units rated 230 to 690V

C. Logic Component

1. The logic component shall be a self-contained control module, compatible with the full range of power structures. The control module shall mount directly to the power structure.

2. The control module shall provide digital microprocessor control and supervision of all controller operation, including pulse firing of the SCR's.

3. The control module shall consist of the following:

   a. Logic control circuitry incorporating a latch circuit for three-wire control.
   b. SCR firing circuitry that incorporates an RC snubber network to prevent false firing.
   c. Input / output circuitry
   d. Digital programming keypad
   e. LCD or LED display

4. The control terminals shall be easily. The terminals shall be UL rated for 250 Volts, 5 Amps maximum and accept a maximum of two wires rated number 18 to number 14 AWG.

2.04 CONTROLLER UNIT FEATURES

A. Starting Modes

1. The controller shall provide the following starting modes as standard.
   a. Soft Start with Selectable Kickstart

1) Programmable initial voltage value of 50 to 100% of rated voltage.
2) Programmable acceleration ramp time from 0 to 30 seconds A selectable kickstart, or boost, shall be provided at the beginning of the voltage ramp. The kickstart shall provide a current pulse of 550 percent of the full load current. The kickstart time shall be adjustable from 0 to 2 seconds

b. Current Limit Start
1) Provides means of limiting the maximum starting current
2) Programmable for 200 to 600 percent of full load current

c. Full Voltage Start
1) Provides across the line starting

d. Dual Ramp Start
1) Provides two separate soft start profiles with separately adjustable ramp times and initial torque settings.
2) Programmable acceleration times from 1 to 30 seconds.
3) Programmable initial torque values from 0 to 90 percent of locked rotor torque.

e. Soft Stop
1) Soft Stop shall provide a voltage ramp-down for an extended motor stopping time.
2) Programmable voltage ramp down time from 0 to 60 seconds.

f. Jog Feature
1) Provides a Jog speed for applications requiring a slow speed.
2) The Jog option shall provide two jog speeds in the forward direction: high (15 percent of base speed) and low (7 percent of base speed).
3) The Jog option shall provide two jog speeds in the reverse direction: high (20 percent of base speed) and low (10 percent of base speed). Reverse operation of the motor shall be available in the jog mode without the use of a reversing contactor.
4) The starting current for Jog operation shall be user adjustable from 0 to 450 percent of the motor's full load current rating.
5) The running current for Jog operation shall be user adjustable from 0 to 450 percent of the motor's full load current rating.

2. The controller shall provide the following mutually exclusive starting and stopping modes. Refer to the system specifications for the option (if any) required.

   a. Pump Control
      1) Pump Control shall be implemented to provide closed loop control of a motor to match the specific torque requirements of centrifugal pumps for both starting and stopping. This shall aid in eliminating the phenomena commonly referred to as "water hammer." Methods utilizing Soft Start with Soft Stop shall not be acceptable.
      2) Closed loop control shall be achieved without using external sensors or feedback devices.
      3) Pump Stop shall be initiated by a dedicated Pump Stop input. A coast-to-rest stop shall be possible with a separate stop input.
      4) Programmable starting time from 1 to 30 seconds minimum.
      5) Programmable stopping time from 1 to 60 seconds minimum.

B. LCD/LED Display

1. Digital parameter adjustment shall be provided through a keypad. Analog potentiometer adjustments are not acceptable.

C. Overload Protection

1. Shall meet applicable standards as a motor thermal protective device.

2. Shall utilize three-phase current sensing. The use of two current transformers shall be unacceptable.

3. Selectable trip classes of 10, 15, 20 and 30 shall be provided as standard.

4. Electronic thermal memory shall provide enhanced motor protection.

D. Digital I/O

1. A minimum of three auxiliary contacts shall be provided for customer use.

2. The contacts shall be rated for 240 Volts AC maximum.

3. Contact configuration shall be programmable and contain the following configurations:
   a. Normal Operation (N.O. or N.C.)
   b. Run Indication (N.O. or N.C.)

c. External Bypass
d. Fault Indication (N.O. or N.C.)

4. Input and Output signals shall be provided as indicated on the Contract Drawings.

E. Communication Port

1. A serial communication port shall be provided as standard.

2. Optional communication protocol interface modules shall be available for connection to Ethernet and RS485.

3. Refer to the systems specification for the options (if any) required.

F. Monitoring

1. The controller shall provide the following monitoring functions indicated through the LCD/LED display.
   a. Three-phase current
   b. Three-phase voltage
   c. Power in kW
   d. Power usage in kWh or mWh
   e. Power factor
   f. Motor thermal capacity usage
   g. Elapsed time

G. Protection and Diagnostics

1. The following protection shall be provided as standard with the controller.
   a. Pre-start line fault advising of shorted SCR or missing load connection with phase indication.
   b. Running line fault advising power loss, shorted SCR or missing load connection.
   c. Pre-start power loss.
   d. Over-temperature

2. The following programmable protection shall be provided as standard with the controller.
   a. Underload
   b. Undervoltage
   c. Overload
   d. Overvoltage
   e. Voltage or Current Unbalance
   f. Excessive Starts Per hour
   g. Phase Reversal
   h. Stall

i. Jam

3. When fault conditions are detected, the controller shall inhibit starting or shut down SCR pulse firing.

4. Fault diagnostics shall be indicated in descriptive text on the LCD/LED display.

5. An auxiliary contact that is programmable for fault indication shall be provided for customer use.

2.05 SOLID STATE REDUCED VOLTAGE CONTROLLER SYSTEM OPTIONS

A. Enclosure

1. NEMA 12 enclosure for indoor use.

2. Paint: ANSI 49 Gray

3. Provide a 6.25” x 2” door mounted white lamacoid nameplate with black letters (message to be defined during submittal).

4. UL Label

B. Transient Protection Modules (Provide only if needed to meet the requirementss of this section)

1. Transient protection with separately mounted protective modules.

2. Protective modules shall consist of metal oxide varistors (MOVs) in combination with capacitors to protect the power components from electrical transients and / or electrical noise. The capacitors shall be provided to shunt noise energy away from the controller’s electronics.

3. The MOVs and capacitors shall be encapsulated in a clear material for easy inspection.

4. The protective modules shall be mounted so that they will not cause damage to the power components upon absorbing an electrical transient.

5. The MOVs shall be rated for a minimum of 220 joules.

C. Input Circuit Breaker

1. Provide a door interlocked thermal magnetic circuit breaker disconnect.

2. Operator Handles
   a. Provide flange mounted operator handles for free standing units.

b. Through the door operating handles are acceptable for wall mounted units.
c. Handles shall be padlockable.

3. The system shall be rated for 65,000 amps. The rating shall be shown on the system label.

D. Control Power Transformer

1. Provide a control power transformer mounted and wired inside of the system enclosure.

2. The transformer shall be rated for an additional 100 VA for customer use.

E. The tramsformer shall be provided with fused primary and secondary protection.

F. Local-Off-Remote Selector Switch

1. Provide a “Local/Off/Remote” selector switch for start-stop control.

2. The devices shall be 30.5mm, NEMA Type 4/4X/13 mounted on the enclosure door.

G. Start-Stop Pushbuttons

1. Provide Start-Stop and Pump Stop (if required) pushbuttons. Stop pushbuttons shall always be active.

2. The devices shall be 30.5mm, NEMA Type 4/4X/13 pilot devices mounted on the enclosure door.

H. Pilot Lights

1. Provide pilot lights, mounted on the enclosure door, for indication of On, Off and Fault.

2. Pilot lights shall be transformer type LED push-to-test.

3. The devices shall be 30.5mm, NEMA Type 4/4X/13 pilot devices mounted on the enclosure door.

I. Human Interface Module

1. Provide a door mounted Human Interface Module with integral display and programming keys.

2. The display shall show operating conditions, adjustments and fault indications.

3. The display shall be LCD/LED.

PART 3 - EXECUTION

3.01 MANUFACTURER'S FIELD SERVICES

A. A factory trained and authorized representative of the manufacturer shall perform all start-up services. The use of third party supplier start-up personnel is not allowed.

B. Provide a minimum of (2) hours of on-site start-up service for each controller (4 hours minimum).

C. At a minimum, the start-up service shall include:

1. Pre-Power Check
   a. Megger Motor Resistances: Phase to Phase and Phase to Ground
   b. Verify system grounding per manufacturer's specifications
   c. Verify power and signal grounds
   d. Check connections
   e. Check environment

2. Power-up and Commissioning
   a. Measure Incoming Power Phase-to-Phase and Phase-to-Ground
   b. Measure AC Current Unloaded and Loaded
   c. Measure Output Voltage Phase-to-Phase and Phase-to-Ground

3. Record all measurements

4. Provide Parameter Listing

END OF SECTION

APPENDIX I

SOFT-START DRIVE DRAWINGS

This page intentionally left blank.

INSTRUMENT SYMBOL IDENTIFIERS

J-3 (J-1 / J-2) J-4 J-5 J-6

J-1: IDENTIFICATION LETTERS (SEE TABLE BELOW)
J-2: LOOP NUMBER
J-3: VENDER DESIGNATOR (SEE NOTE 3)
J-4: FUNCTION BLOCK (SEE TABLE BELOW)
J-5: PANEL NUMBER
J-6: HAND SWITCH DESIGNATOR (SEE BELOW)

	FIRST LETTER		SUCCEEDING LETTER		
	VARIABLE	MODIFIER	PASSIVE FUNCTION	OUTPUT FUNCTION	MODIFIER
A	ANALYSIS		ALARM		AUTOMATIC
B	BREAKER		USER'S CHOICE	CLOSE OR STOP	BYPASS
C	COMMUNICATIONS			CONTROL	CLOSED
D	DENSITY	DIFFERENTIAL		OPEN OR START	
E	VOLTAGE (EMF)		PRIMARY ELEMENT	SENSOR	
F	FLOW RATE	RATIO	FAIL	FAIL	FAIL
G	GAUGING		GLASS		LOCAL/MANUAL/HAND
H	HAND				HIGH OR OPEN
I	CURRENT		INDICATE		INTERMEDIATE
J	POWER	SCAN			
K	TIME	TIME RATE		CONTROL STATION	
L	LEVEL		LIGHT		LOW
M	MOTOR	MOMENTARY		MOTOR	MIDDLE
N	USER'S CHOICE		INPUT	FORWARD	ON OR OPERATE
O	USER'S CHOICE			OFF	OPEN
P	PRESSURE	PNEUMATIC	POINT (TEST)	POSITION	
Q	QUANTITY OR EVENT	TOTALIZE		EMERGENCY/ABNORMAL	
R	RADIOACTIVITY		RECORD OR PRINT	REMOTE	RUN
S	SPEED OR FREQUENCY	SUM	SWITCH	SWITCH	STOP
T	TEMPERATURE			TRANSMIT	TRANSDUCER
U	MULTI VARIABLE		MULTIFUNCTION	MULTIFUNCTION	MULTIFUNCTION
V	VARIABLE OR VISCOSITY			VALVE OR DAMPER	VFD / VALVE
W	WEIGHT OR FORCE		WELL		
X	MOD, LIGHT OR VALVE		UNCLASSIFIED	UNCLASSIFIED	UNCLASSIFIED
Y	INTERLOCK			RELAY OR COMPUTE	RESET
Z	POSITION			DRIVE OR ACTUATOR	

GENERAL INSTRUMENT OR FUNCTION SYMBOLS	FIELD MOUNTED	PRIMARY LOCATION ACCESSIBLE TO OPERATOR	AUXILIARY LOCATION ACCESSIBLE TO OPERATOR	NORMALLY INACCESSIBLE OR BEHIND THE PANEL
DISCRETE INSTRUMENTS				
SHARED DISPLAY, SHARED CONTROL				
COMPUTER FUNCTION				
PROGRAMMABLE LOGIC CONTROL				

J-4 FUNCTION BLOCK DESIGNATORS

- SUMMING
- DIFFERENCE
- INTEGRAL
- DERIVATIVE
- MULTIPLYING
- DIVIDING
- CONVERT:
- ROOT EXTRACTION
- SQUARE ROOT
- EXPONENTIAL
- HIGH SELECTING
- LOW SELECTING
- BIAS
- NON-LINEAR OR UNSPECIFIED FUNCTION

* E-VOLTAGE, I-CURRENT, P-PNEUMATIC, A-ANALOG, B-BINARY, H-HYDRAULIC, O-ELECTROMAGNETIC, SONIC, R-RESISTANCE, D-DIGITAL

J-6 HAND SWITCH DESIGNATORS

HS XXX — SELECTOR SWITCH (MAINTAINED CONTACTS)

XXX = HOA: HAND-OFF-AUTO
= HOR: HAND-OFF-REMOTE
= F-R: FORWARD-REVERSE
= I-O: ON-OFF
= B-V: BYPASS-VFD
= L-O-R: LOCAL-OFF-REMOTE
= OC: OPEN-CLOSE
= POT: POTENTIOMETER
= OCA: OPEN-CLOSE-AUTO
= L-R: LOCAL-REMOTE

HMS XXX — PUSHBUTTON (MOMENTARY CONTACTS)

XXX = RES : RESET
XXX = ACK : ACKNOWLEDGE

INSTRUMENT SUPPLY SERVICES

AS — INSTRUMENT AIR SUPPLY REFER TO ISA RP7.7 FOR INSTRUMENT AIR QUALITY STANDARDS

ES — 120 VAC ELECTRICAL SERVICE (DIFFERENT VOLTAGES ARE SPECIFICALLY NOTED)

PLC INPUT/OUTPUT

- DISCRETE INPUT
- ANALOG INPUT
- DISCRETE OUTPUT
- ANALOG OUTPUT

PLC INDICATION

XXX

MODIFIER XXX LEGEND
PCP = PUMP CONTROL PANEL (PCP)

VALVE OPERATORS

- DIAPHRAGM
- DIAPHRAGM PRESSURE BALANCED
- MOTOR
- CYLINDER OPERATOR
- SOLENOID
- SOLENOID VALVE

PRIMARY FLOW ELEMENTS

- ORIFICE PLATE
- VENTURI TUBE
- FLUME
- WEIR PLATE
- MAGNETIC FLOW METER
- SONIC FLOW METER
- FLOW NOZZLE
- VORTEX SENSOR

LINES

- MAIN PROCESS (12" BW)
- PIPE SYSTEM
- PIPE SIZE IN INCHES
- ELECTRICAL SIGNAL
- SOFTWARE OR DATA LINK
- PNEUMATIC
- HYDRAULIC
- CAPILLARY TUBE
- ELECTROMAGNETIC OR SONIC (GUIDED)

MECHANICAL — ELECTRICAL

OR — CONNECTED

NOT CONNECTED

MISCELLANEOUS

- FLANGE
- UNION
- TEE
- REDUCER
- DIAPHRAGM SEAL
- INTERLOCK. NUMBER IS THE CROSS REFERENCE TO A SPECIFIC ELEMENTARY DIAGRAM OR TO A SPECIFIC CONTROL STRATEGY DESCRIBED IN THE SPECS
- EXPANSION JOINT
- FLEXIBLE COUPLING
- FLANGED COUPLING ADAPTER
- SLUICE/SIDE/WEIR GATE
- WATER LINE
- LEVEL PROBES (CONDUCTIVITY)
- LEVEL PROBES (ULTRASONIC)
- FLOAT SWITCH

EQUIPMENT

- 3-PHASE MONITOR
- ELAPSED TIME METER
- OPERATOR INTERFACE TERMINAL
- LEVEL TRANSDUCER (SUBMERSIBLE)
- HORN
- SUBMERSIBLE PUMP
- PUMP

VALVES

- GATE VALVE
- GLOBE VALVE
- PLUG VALVE
- CHECK VALVE
- PINCH VALVE
- DIAPHRAGM VALVE
- BUTTERFLY VALVE
- BALL VALVE

TYPICAL CONNECTIONS

- IN-LINE DEVICE
- DIRECT CONNECTION TO PROCESS
- TEMPERATURE ELEMENT WITH WELL
- RADIATION OR SONIC SENSING
- DIAPHRAGM SEAL CONNECTION

ABBREVIATIONS

A	= ALARM
AI	= ANALOG INPUT
AO	= ANALOG OUTPUT
AUTO	= AUTOMATIC
ATS	= AUTOMATIC TRANSFER SWITCH
CIM	= COMMUNICATIONS INTERFACE MODULE
CPT	= CONTROL POWER TRANSFORMER
DI	= DISCRETE INPUT
DO	= DISCRETE OUTPUT
DPDT	= DOUBLE POLE-DOUBLE THROW
E-STOP	= EMERGENCY STOP BUTTON
EUH	= ELECTRIC UNIT HEATER
ETM	= ELAPSED TIME METER
F	= FAULT
FP	= FLOW PACE
HMI	= HUMAN MACHINE INTERFACE
I	= INTERLOCK CONTROL
I/O	= INPUT/OUTPUT
IP	= INFLUENT PUMP
LM	= LEVEL MAINTAIN CONTROL
M	= ELECTRIC MOTOR
MMR	= MOTOR MANAGEMENT RELAY
MOD	= MOTOR OPERATED DAMPER
MPD	= MOTOR PROTECTIVE DEVICE
O/C	= OPEN/CLOSE
OIT	= OPERATOR INTERFACE TOUCHSCREEN
OT	= OVER TEMPERATURE
PDIT	= PRESSURE DIFFERENTIAL INDICATION TRANSMITTER
PLC	= PROGRAMMABLE LOGIC CONTROLLER
PM	= PRESSURE MAINTAIN CONTROL
PSCADA	= PLANT SCADA SYSTEM
PVCC	= PVC COATED
R/O	= RUN/OFF
RTU	= REMOTE TELEMETRY UNIT
SL	= SEAL LEAK
SP	= SPEED
SP	= SUMP PUMP
S/S	= START/STOP
SSRV	= SOLID STATE REDUCED VOLTAGE
TEMP	= TEMPERATURE
TSP	= TWISTED SHIELDED PAIR
TYP	= TYPICAL
VAC	= VOLTS/ALTERNATING CURRENT
VDC	= VOLTS/DIRECT CURRENT
VFD	= VARIABLE FREQUENCY DRIVE
XX	= XX
XXX	= XXX

EQUIPMENT ABBREVIATIONS

IC	= INTEGRAL CONTROL UNIT
FSTB	= FLOAT SWITCH TERMINAL BOX
MCC	= MOTOR CONTROL CENTER
PCP	= PUMP CONTROL PANEL
PLC	= PROGRAMMABLE LOGIC CONTROLLER
TIP	= TERMINAL INTERFACE PANEL
VFD	= VARIABLE FREQUENCY DRIVE

ELEMENTARY WIRING SYMBOLS

- CONTROL RELAY
- PLC OUTPUT VIA INTERPOSING RELAY
- NORMALLY OPEN CONTACT
- NORMALLY CLOSED CONTACT
- FUSE
- CIRCUIT BREAKER
- PUSHBUTTON
- SELECTOR SWITCH X00 = REPRESENTS THE SWITCH POSITIONS
- MOTOR
- TERMINAL BLOCK
- GROUND
- FLOAT SWITCH
- NORMALLY OPEN LIMIT SWITCH
- NORMALLY OPEN TIMED CLOSED CONTACT
- THERMOSTAT CLOSE ON RISING/TEMPERATURE
- INDICATING LIGHT – A = AMBER, G = GREEN, R = RED, W = WHITE

NOTES:

1. THIS IS A GENERALIZED LEGEND SHEET. THIS PROJECT MAY NOT USE ALL INFORMATION SHOWN.
2. INFORMATION SHOWN MAY NOT BE ALL INCLUSIVE. ALSO SEE ISA S5.1, S5.3 AND S7.3.

NANSEMOND 1646 SUFFOLK 1742 — 1974 — CITY of SUFFOLK, VIRGINIA

CITY OF SUFFOLK, VIRGINIA

DEPARTMENT OF PUBLIC UTILITIES
442 W. WASHINGTON STREET
SUFFOLK, VA 23434

PUBLIC FACILITIES MANUAL VOLUME II

WASTEWATER PUMP STATION INSTRUMENTATION AND CONTROL

REVISIONS

NO.	DESCRIPTION	DATE

LEGEND AND ABBREVIATIONS

Drawing No.

I-1CSS

Scale: NOT TO SCALE | 2017 RELEASE 1

SPECIFIC NOTES:

1. PANEL DIMENSIONS SHOWN ARE MINIMUM REQUIRED. CONTROL PANEL HEIGHT NOT TO EXCEED 72"
2. FLOOR MOUNTED PANELS SHALL BE INSTALLED ON 3" HOUSEKEEPING PAD

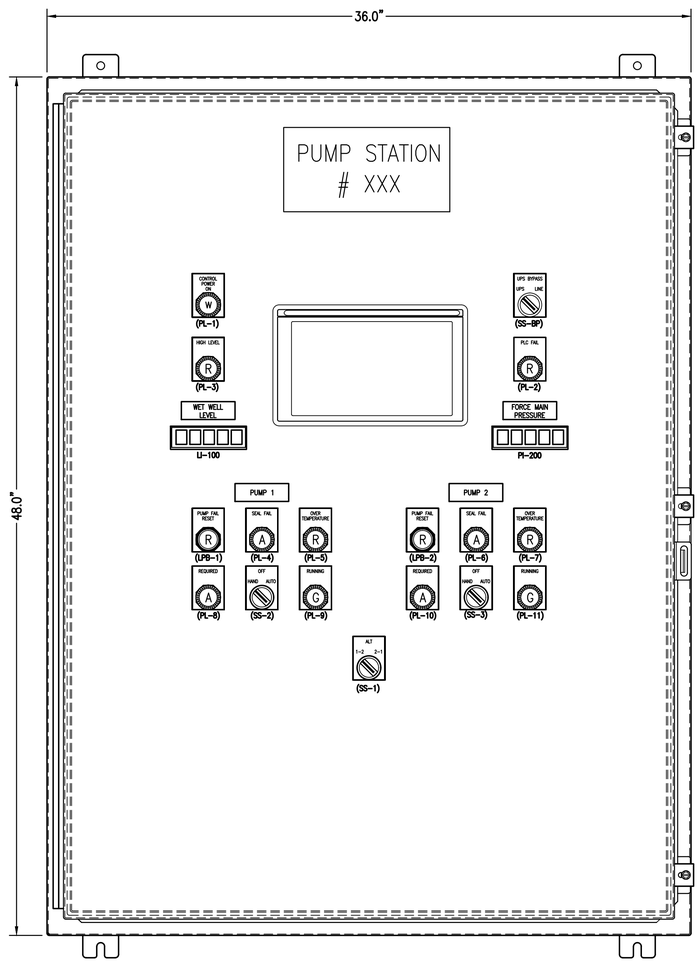

ELEVATION - PCP 1 2

NOT TO SCALE HOFFMAN A483612LP

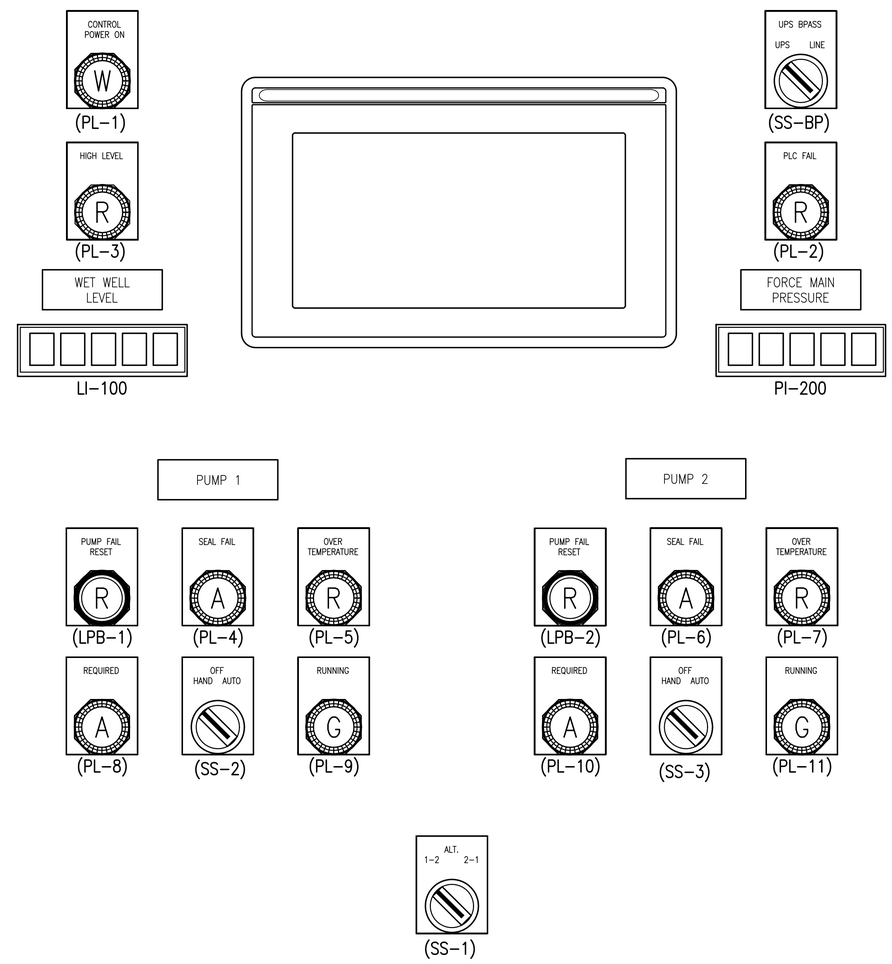

DOOR DEVICE LAYOUT

NANSEMOND 1646 SUFFOLK 1742 19 74 CITY of SUFFOLK, VIRGINIA

CITY OF SUFFOLK, VIRGINIA

DEPARTMENT OF PUBLIC UTILITIES
442 W. WASHINGTON STREET
SUFFOLK, VA 23434

PUBLIC FACILITIES MANUAL VOLUME II

WASTEWATER PUMP STATION INSTRUMENTATION AND CONTROL

REVISIONS

NO.	DESCRIPTION	DATE

PUMP CONTROL PANEL ELEVATIONS

Drawing No.

I-2CSS

Scale: NOT TO SCALE | 2017 RELEASE 1

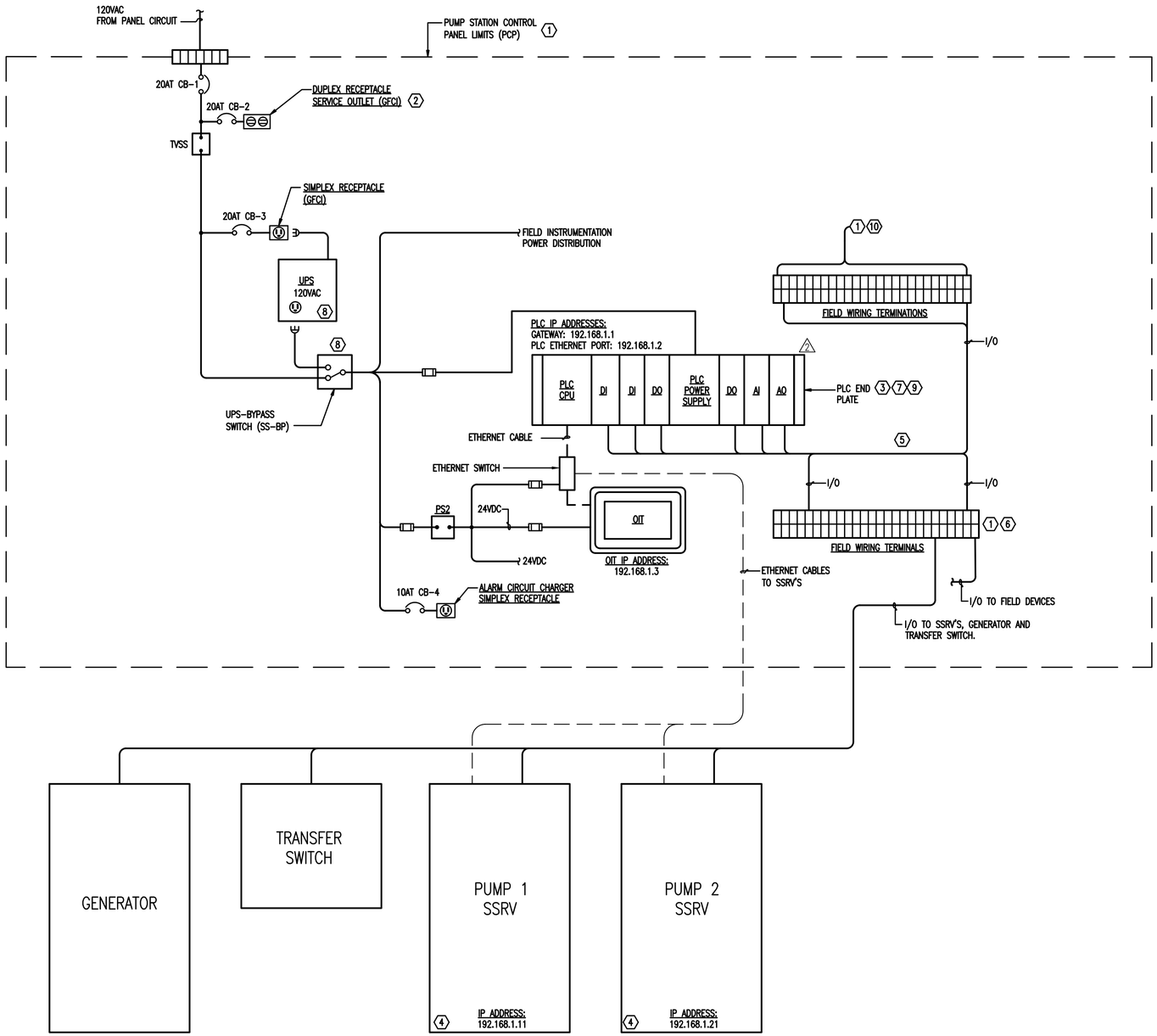

PCP SYSTEM LAYOUT

NOT TO SCALE

SPECIFIC NOTES:

1. SCHEMATIC REPRESENTATION OF FIELD TERMINALS. SEPARATION OF DISCRETE AND ANALOG SIGNALS NOT SHOWN. SURGE PROTECTORS, AND RELAYS NOT SHOWN FOR CLARITY. REFER TO PCP ELEMENTARY DIAGRAM AND I/O LIST IN SPECIFICATIONS FOR SPECIFIC WIRING.
2. PROVIDE SERVICE OUTLET (GFCI)
3. PROVIDE I/O CARDS IN QUANTITIES AS REQUIRED. REFER TO PCP ELEMENTARY DIAGRAM AND I/O LIST IN SPECIFICATIONS FOR I/O REQUIREMENTS. I/O THAT IS NOT USED SHALL BE WIRED TO FIELD TERMINAL BLOCKS AND LABELED AS SPARES.
4. COMBINATION STARTERS ARE MOUNTED REMOTELY FROM CONTROL PANEL PCP. PROPERLY SIZE STARTER AND BREAKER FOR PUMP MOTOR.
5. DIAGRAM IS SCHEMATIC REPRESENTATION ONLY. PROVIDE TERMINAL BLOCKS, TERMINALS, WIRING, LABELS, RELAYS, SWITCHES AND COMPONENTS REQUIRED FOR PLC SYSTEM INSTALLATION AS REQUIRED FOR A COMPLETE OPERATING SYSTEM.
6. PROVIDE INTERPOSING RELAYS WITH SNUBBER CIRCUIT FOR DISCRETE OUTPUTS, INCLUDING SPARE DISCRETE OUTPUTS. PROVIDE SURGE PROTECTION FOR ANALOG INPUT CIRCUITS AND FUSES FOR ANALOG OUTPUT CIRCUITS, INCLUDING SPARES AI AND AO POINTS.
7. PROVIDE NECESSARY END PLATES FOR PLC AT BOTH ENDS IF REQUIRED.
8. PROVIDE UPS WITH BYPASS SWITCH FOR BACK-UP POWER; MINIMUM OF 2 HOURS.
9. NOT ALL REQUIRED I/O CARDS, SLOTS AND I/O RACKS ARE SHOWN. PROVIDE QUANTITY OF I/O CARDS, CARD TYPES, I/O RACKS, INTERFACE MODULES AND CABLING TO ACCOMMODATE THE QUANTITY OF I/O INDICATED IN THE SPECIFICATIONS.
10. PROVIDE SCADA INTERFACE TERMINALS FOR CONNECTION TO SCADA SYSTEM. SCADA I/O POINT SHALL BE AS SPECIFIED AND/OR AS DIRECTED BY THE OWNER. SEE SHEET I-11CSS FOR DETAILS

NANSEMOND 1646 SUFFOLK 1742
19 74
CITY of SUFFOLK, VIRGINIA

CITY OF SUFFOLK, VIRGINIA

DEPARTMENT OF PUBLIC UTILITIES
442 W. WASHINGTON STREET
SUFFOLK, VA 23434

PUBLIC FACILITIES MANUAL VOLUME II

WASTEWATER PUMP STATION INSTRUMENTATION AND CONTROL

REVISIONS

NO.	DESCRIPTION	DATE

PUMP CONTROL SYSTEM LAYOUT

Drawing No.

I-3CSS

Scale: NOT TO SCALE | 2017 RELEASE 1

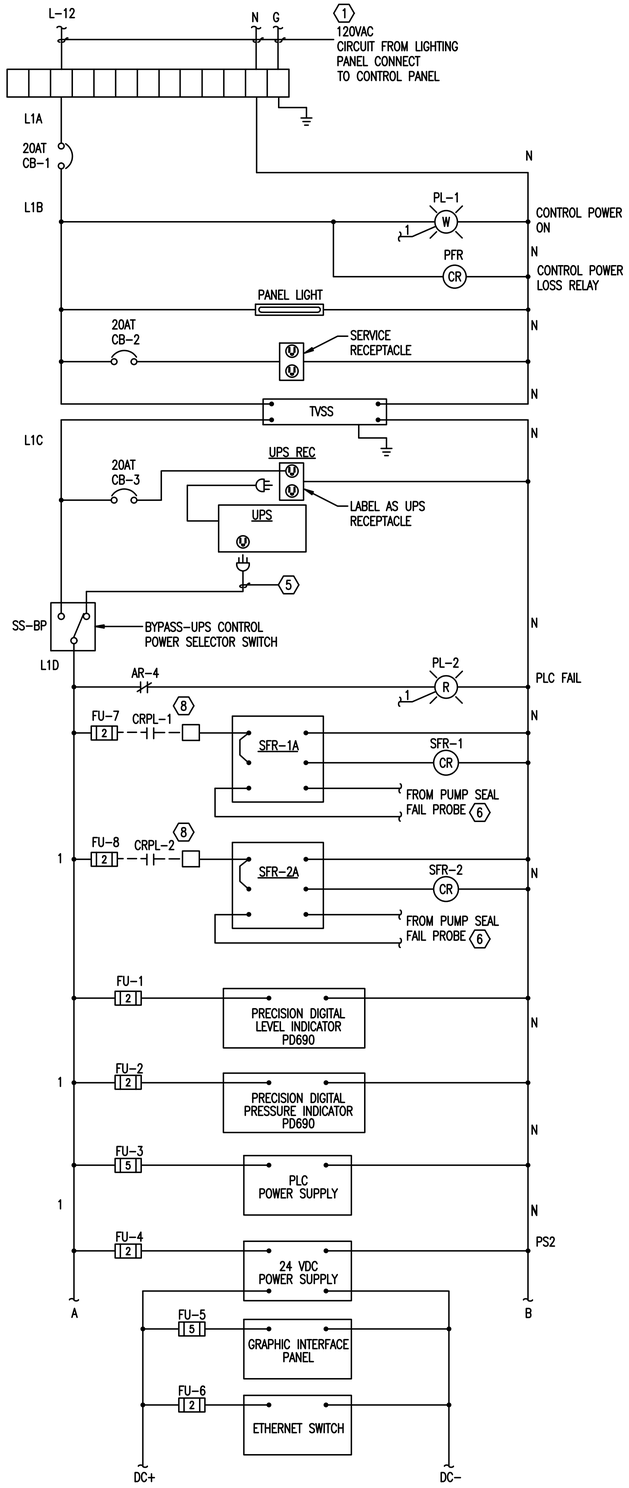

PUMP CONTROL PANEL PCP ELEMENTARY DIAGRAM - CONTROLS

NOT TO SCALE

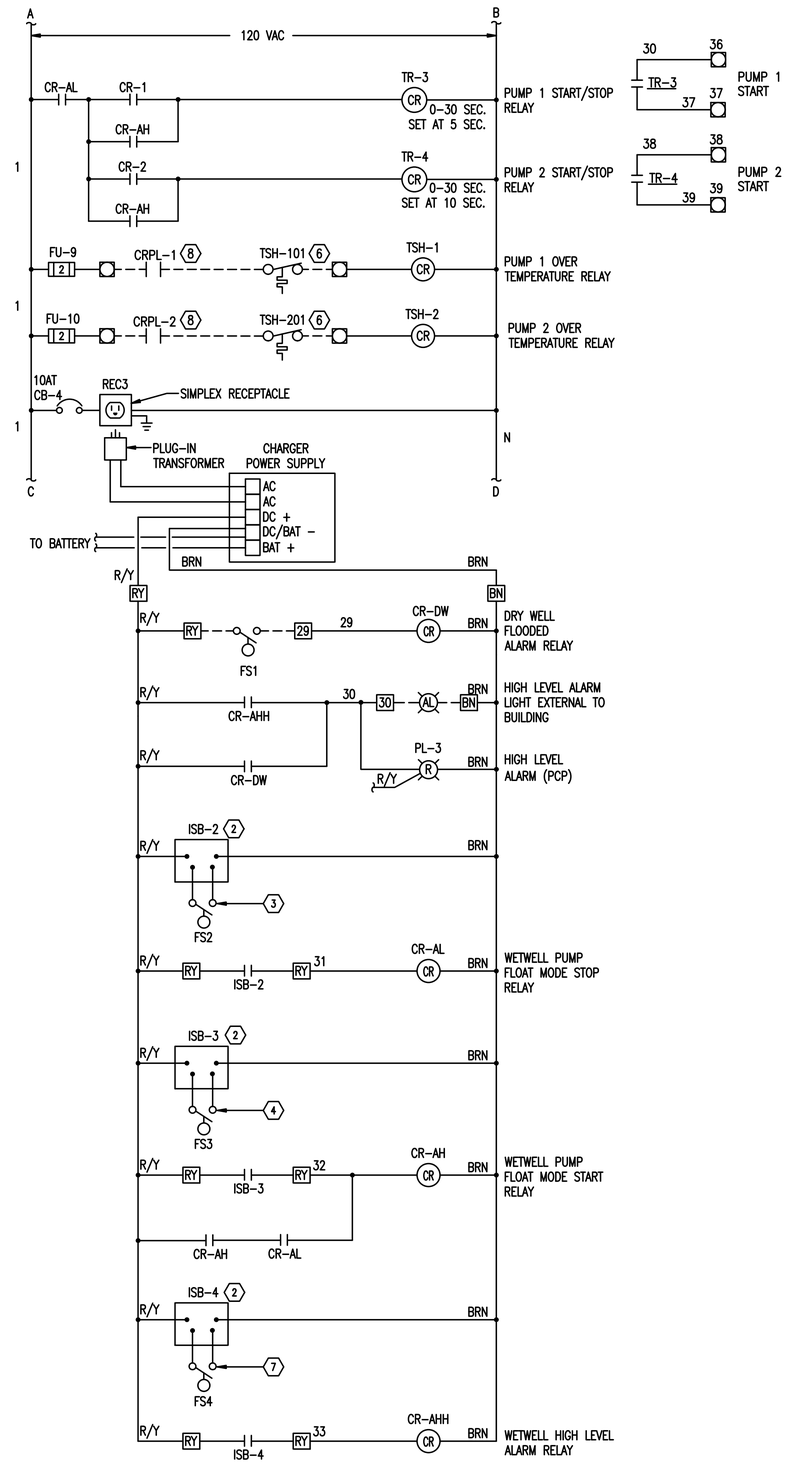

FLOAT CIRCUIT PART OF PCP

NOT TO SCALE

SPECIFIC NOTES

1. CONNECT TO LIGHTING PANEL BREAKER.
2. INTRINSICALLY SAFE BARRIER FOR LEVEL FLOAT SWITCH SIGNAL FROM WET WELL. PROVIDE PHYSICAL BARRIER BETWEEN INTRINSICALLY SAFE CIRCUIT WIRING AND ALL OTHER WIRING PER NEC REQUIREMENTS. MAINTAIN A MINIMUM OF 2" BETWEEN ISB AND ALL OTHER COMPONENTS AND WIRING IN PANEL. PROVIDE LABELS FOR CONDUIT CARRYING CIRCUIT TO INDICATE "INTRINSICALLY SAFE CIRCUIT".
3. CONNECT FLOAT SWITCH WIRING FROM LOW WET WELL LEVEL FLOAT SWITCH TO ISB-2. ENSURE WIRING IS INSTALLED PER NEC ARTICLE 504.
4. CONNECT FLOAT SWITCH WIRING FROM HIGH WET WELL LEVEL FLOAT SWITCH TO ISB-3. ENSURE WIRING IS INSTALLED PER NEC ARTICLE 504.
5. POWER CORD FOR UPS.
6. SEAL FAILURE RELAYS AND PUMP OVER TEMPERATURE CONTACT CONNECT TO PUMPS THROUGH CONDUIT FROM PUMP SPLICE BOX.
7. CONNECT FLOAT SWITCH WIRING FROM HIGH-HIGH LEVEL FLOAT SWITCH TO ISB-4. ENSURE WIRING IS INSTALLED PER NEC ARTICLE 504.
8. CRPL-1 LOCATED IN PUMP 1 SOFT STARTER, CRPL-2 LOCATED IN PUMP 2 SOFT STARTER

NANSEMOND 1646 SUFFOLK 1742 19 74 CITY of SUFFOLK, VIRGINIA

CITY OF SUFFOLK, VIRGINIA

DEPARTMENT OF PUBLIC UTILITIES
442 W. WASHINGTON STREET
SUFFOLK, VA 23434

PUBLIC FACILITIES MANUAL VOLUME II

WASTEWATER PUMP STATION INSTRUMENTATION AND CONTROL

REVISIONS

NO.	DESCRIPTION	DATE

PUMP CONTROL PANEL POWER WIRING

Drawing No.

I-4CSS

Scale: NOT TO SCALE | 2017 RELEASE 1

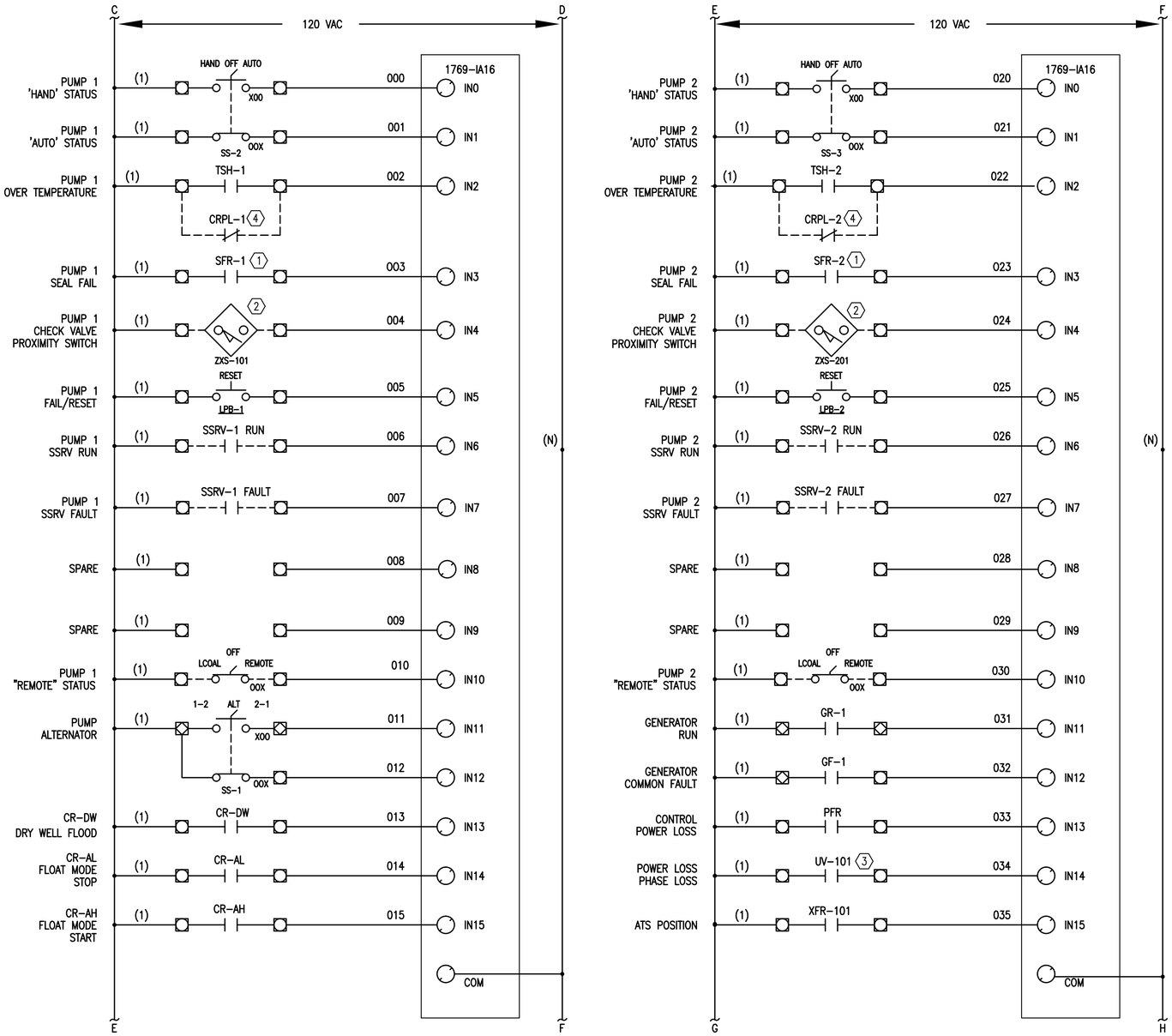

PUMP CONTROL PANEL PLC INPUT

NOT TO SCALE

DRAWING NOTES:

1. PUMP SEAL MONITOR AND PUMP OVER TEMPERATURE ARE WIRED TO PUMP THROUGH CONDUIT AND SPLICE BOX. PROVIDE TERMINALS IN SPLICE BOX FOR PUMP CONNECTIONS.
2. CHECK VALVE PROXIMITY SWITCHES SHALL BE CLOSED WHEN CHECK VALVES ARE CLOSED.
3. UNDERVOLTAGE MONITOR SHALL BE MOUNTED IN GENERATOR TRANSFER SWITCH AND CONNECTED TO LOAD SIDE.
4. CRPL-1 LOCATED IN PUMP 1 SOFT STARTER, CRPL-2 LOCATED IN PUMP 2 SOFT STARTER

DEVICES SHOWN - - - - -
ARE FIELD MOUNTED.

NANSEMOND 1646 SUFFOLK 1742
19 74
CITY of SUFFOLK, VIRGINIA

CITY OF SUFFOLK, VIRGINIA

DEPARTMENT OF PUBLIC UTILITIES
442 W. WASHINGTON STREET
SUFFOLK, VA 23434

PUBLIC FACILITIES MANUAL VOLUME II

WASTEWATER PUMP STATION INSTRUMENTATION AND CONTROL

REVISIONS

NO.	DESCRIPTION	DATE

PUMP CONTROL PANEL PLC INPUT

Drawing No.

I-5CSS

Scale: NOT TO SCALE | 2017 RELEASE 1

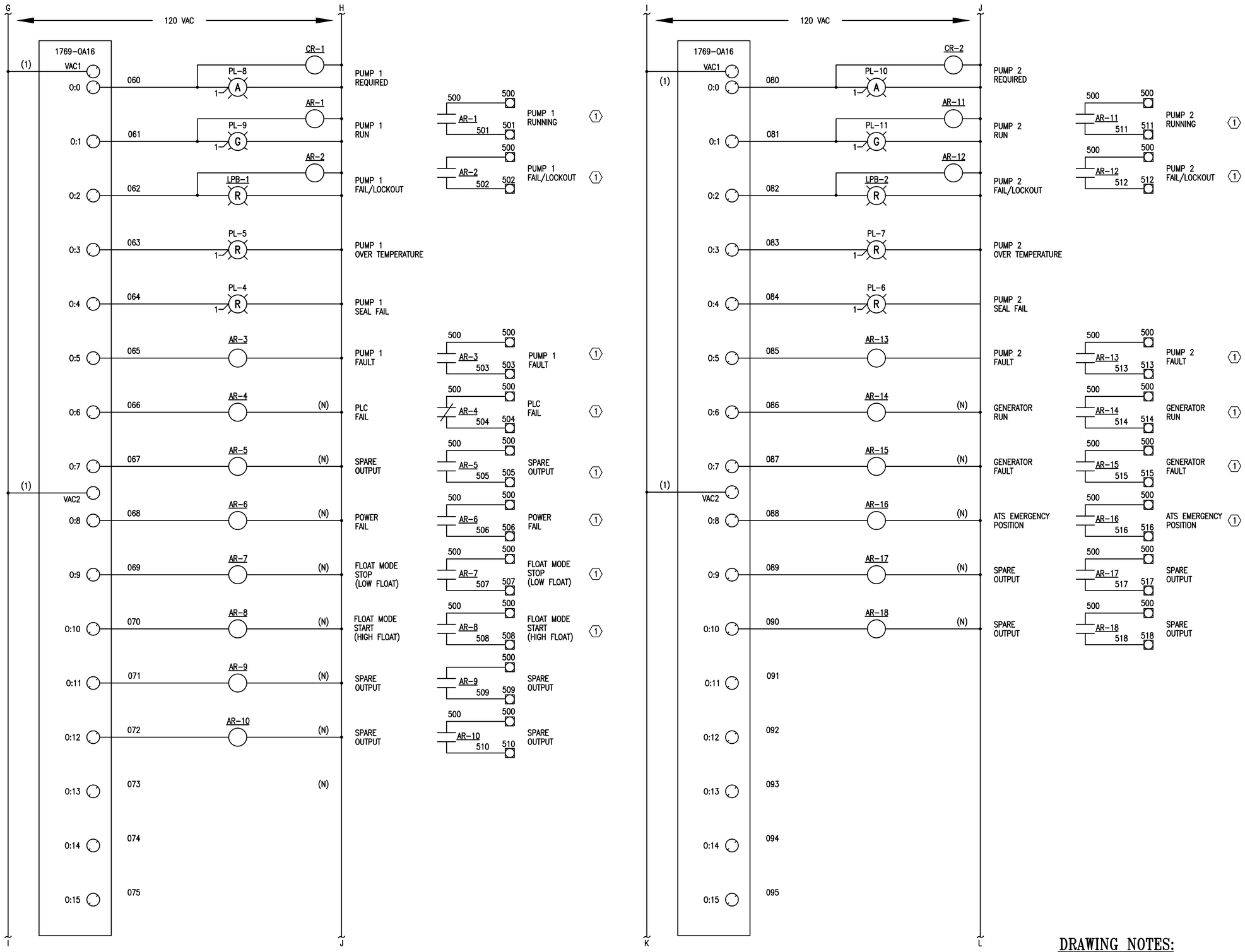

PUMP CONTROL PANEL PLC OUTPUT

NOT TO SCALE

DRAWING NOTES:

(1) STATUS AND ALARM POINTS ARE WIRED FOR SCADA SYSTEM.

DEVICES SHOWN - - - - - - ARE FIELD MOUNTED.

NANSEMOND 1646 SUFFOLK 1742 19 74 CITY of SUFFOLK, VIRGINIA

CITY OF SUFFOLK, VIRGINIA

DEPARTMENT OF PUBLIC UTILITIES

442 W. WASHINGTON STREET

SUFFOLK, VA 23434

PUBLIC FACILITIES MANUAL VOLUME II

WASTEWATER PUMP STATION INSTRUMENTATION AND CONTROL

REVISIONS

NO.	DESCRIPTION	DATE

PUMP CONTROL PANEL PLC OUTPUT

Drawing No.

I-6CSS

Scale: NOT TO SCALE | 2017 RELEASE 1

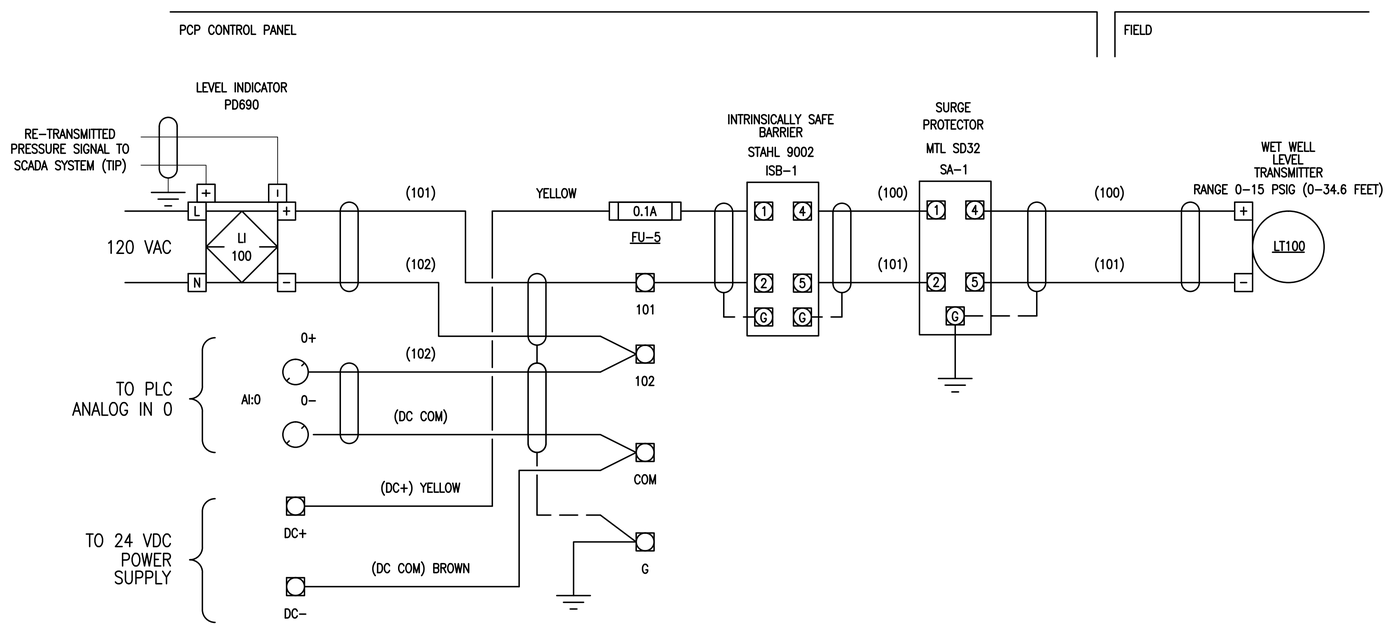

WET WELL LEVEL

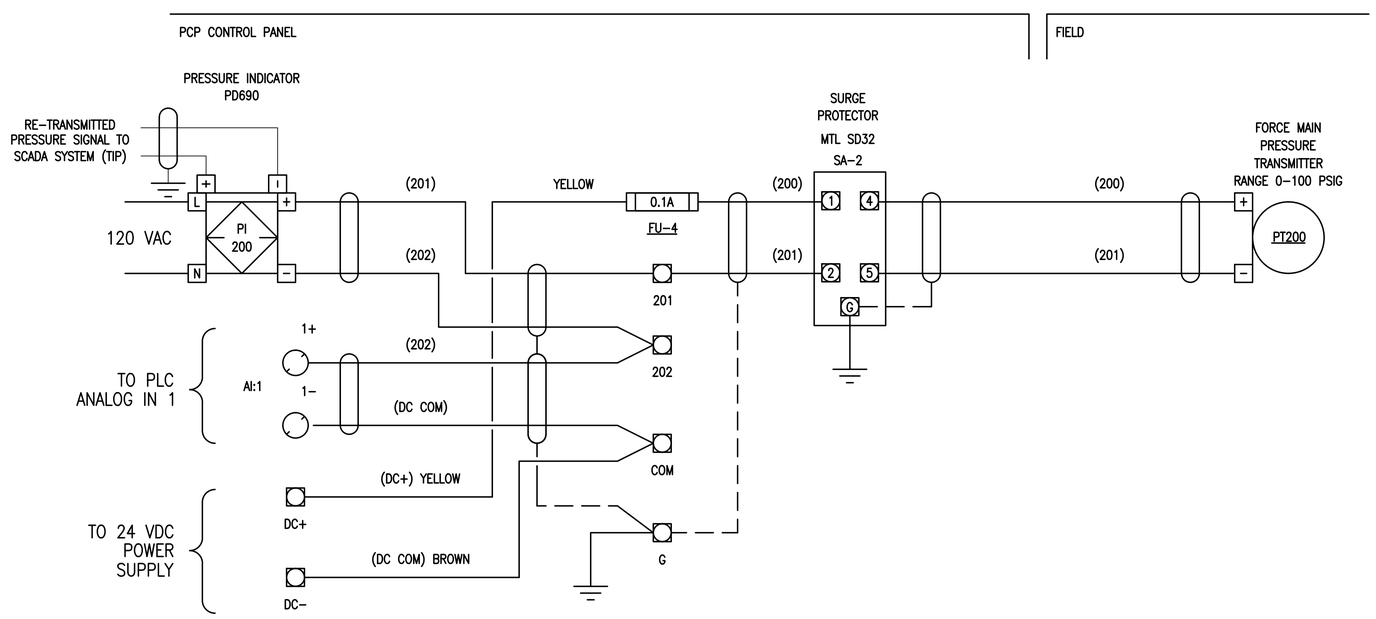

FORCE MAIN PRESSURE

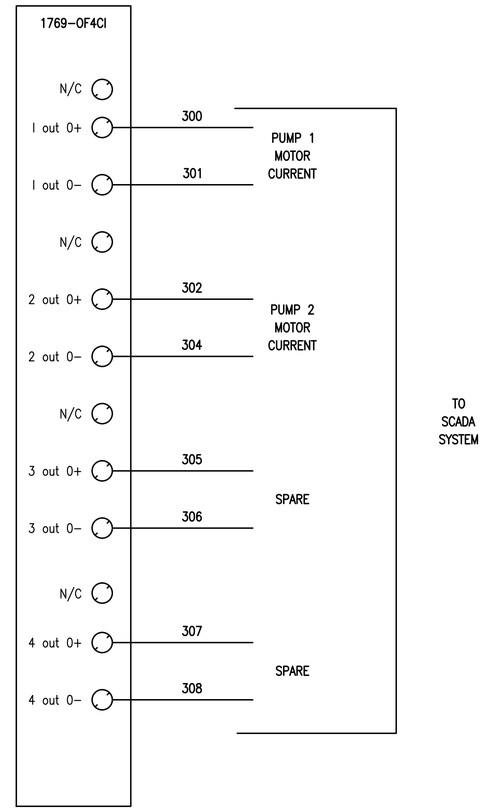

ANALOG SIGNALS TO SCADA SYSTEM

NANSEMOND 1646 SUFFOLK 1742
19 74
CITY of SUFFOLK, VIRGINIA

CITY OF SUFFOLK, VIRGINIA

DEPARTMENT OF PUBLIC UTILITIES
442 W. WASHINGTON STREET
SUFFOLK, VA 23434

PUBLIC FACILITIES MANUAL VOLUME II

WASTEWATER PUMP STATION INSTRUMENTATION AND CONTROL

REVISIONS

NO.	DESCRIPTION	DATE

PUMP CONTROL ANALOG LOOPS

Drawing No.

I-7CSS

Scale: NOT TO SCALE | 2017 RELEASE 1

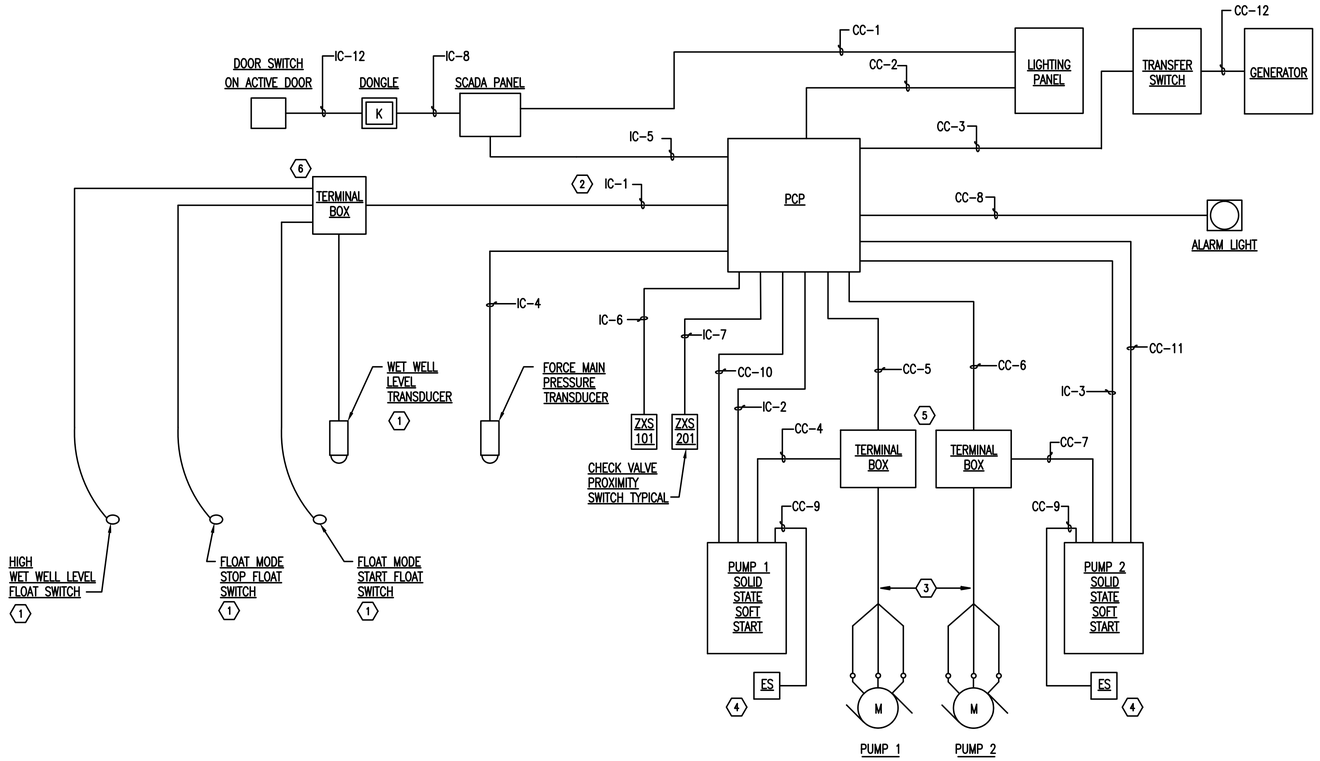

CONTROL SYSTEM RISER DIAGRAM

NOT TO SCALE

DRAWING NOTES

1. UNLESS OTHERWISE NOTED, ALL WORK SHOWN ARE NEW.
2. REFER TO ELECTRICAL DRAWINGS FOR LOCATIONS OF EQUIPMENT.

SPECIFIC NOTES

(1) WET WELL DESIGNATED AS CLASS I, DIVISION 1 GROUP D HAZARDOUS LOCATION. LEVEL TRANSDUCER AND FLOAT SWITCHES SHALL BE WIRED AS AN INTRINSICALLY SAFE CIRCUITS.

(2) CONDUIT SHALL BE LABELED PER NEC "INTRINSICALLY SAFE WIRING".

(3) PUMP CABLES FOR POWER, SEAL MONITOR AND OVER TEMPERATURE CUTOUT. MAY BE TWO CABLES.

(4) EMERGENCY STOP PUSH BUTTON MOUNTED ON WALL NEAR PUMP IN DRY WELL (PROVIDED IF STATION HAS DRYWELL).

(5) FOR WET PIT DRY PIT PUMP STATIONS SPLICE BOXES MAY NOT BE REQUIRED. COORDINATE WITH PUMP MANUFACTURE WHETHER POWER CABLE AND MONITORING WIRING ARE ONE OR TWO CABLES. ON STATIONS WHERE SPLICE BOXES ARE NOT USED WIRE DIRECT TO STARTER THROUGH CC-4 AND CC-7. PUMP SEAL MONITOR AND OVER TEMPERATURE SENSORS ARE WIRED TO PUMP CONTROL PANEL FOR MONITORING AND ALARM. MOVE CC-5 AND CC-6 ACCORDINGLY.

(6) SEE SHEET I-11CSS FOR DETAILS.

CONDUIT AND CONDUCTOR SCHEDULE

CC-1	2#12, 1#12G-3/4" CONDUIT FROM LIGHTING PANEL TO SCADA PANEL.
CC-2	2#12, 1#12G-3/4" CONDUIT FROM LIGHTING PANEL TO PUMP CONTROL PANEL (PCP)
CC-3	12#14, 1#12G.-3/4" CONDUIT FOR UNDER VOLTAGE MONITOR STATUS, ATS POSITION, GENERATOR RUN AND GENERATOR FAIL TO PCP. (2#14 SPARE CONDUCTORS)
CC-4	SEE ELECTRICAL DRAWINGS FOR CONDUIT SIZE, WIRE SIZE AND CONDUIT NUMBERING. CONDUIT NUMBERING.
CC-5	6#14, 1#12G.-3/4" CONDUIT (2#14 SPARE CONDUCTOR INCLUDED). ACTIVE CONDUCTORS FOR PUMP 1 SEAL FAIL SENSOR AND PUMP OVER TEMPERATURE SENSORS.
CC-6	6#14, 1#12G.-3/4" CONDUIT (2#14 SPARE CONDUCTOR INCLUDED). ACTIVE CONDUCTORS FOR PUMP 2 SEAL FAIL SENSOR AND PUMP OVER TEMPERATURE SENSORS.
CC-7	SEE ELECTRICAL DRAWINGS FOR CONDUIT SIZE, WIRE SIZE AND CONDUIT NUMBERING.
CC-8	2#12, 1#12G-3/4" CONDUIT FROM PCP TO ALARM LIGHT.
CC-9	2#12, 1#12G-3/4" CONDUIT FROM STARTERS TO EMERGENCY STOP STATION (ES).
CC-10	18#14, 1#12G.-1" CONDUIT (4#14 SPARE CONDUCTORS INCLUDED) FOR PUMP 1 START/STOP, RUN STATUS, FAULT STATUS, CONTROL POWER LOCKOUT AND REMOTE POSITION.
CC-11	18#14, 1#12G.-1" CONDUIT (4#14 SPARE CONDUCTORS INCLUDED) FOR PUMP 2 START/STOP, RUN STATUS, FAULT STATUS, CONTROL POWER LOCKOUT AND REMOTE POSITION.
CC-12	8#14, 1#16 FOR GENERATOR RUN STATUS, COMMON FAULT.
IC-1	6#14, 1#12G., 1-#16 TPS -1" CONDUIT FOR HIGH WET AND LOW WET WELL LEVEL FLOAT SWITCHES AND LEVEL TRANSMITTER - MARK CONDUIT INTRINSICALLY SAFE WIRING.
IC-2	1 CAT5E CABLES, 3/4" CONDUIT FOR ETHERNET COMMUNICATION FROM PCP ETHERNET SWITCH TO SSRV STARTER.
IC-3	1 CAT5E CABLES, 3/4" CONDUIT FOR ETHERNET COMMUNICATION FROM PCP ETHERNET SWITCH SSRV STARTER.
IC-4	1 #16 TPS. 3/4" CONDUIT FOR FORCE MAIN PRESSURE TRANSMITTER
IC-5	26#16, 1#12G AND 8 #16 TPS, 1-1/2" CONDUIT FOR ALARM SIGNALS FROM PCP TO SCADA PANEL (TELOG).
IC-6	2#12, 1#12G 3/4" CONDUIT FOR ALARM SIGNALS FROM CHECK VALVE TO PCP.
IC-7	2#12, 1#12G 3/4" CONDUIT FOR ALARM SIGNALS FROM CHECK VALVE TO PCP.
IC-8	1 BELDEN 9536 CABLE, 1#12G 3/4" CONDUIT FROM DONGLE TO SCADA PANEL.
IC-9	1 BELDEN 6660FT CABLE, 1/2" CONDUIT FROM DOOR SWITCH TO DONGLE. INSTALL CONDUIT FROM DONGLE TO LOCATION NEAR DOOR SWITCH. EXTEND CABLE TO SWITCH.

NANSEMOND 1646 SUFFOLK 1742
19 74
CITY of SUFFOLK, VIRGINIA

CITY OF SUFFOLK, VIRGINIA

DEPARTMENT OF PUBLIC UTILITIES
442 W. WASHINGTON STREET
SUFFOLK, VA 23434

PUBLIC FACILITIES MANUAL VOLUME II

WASTEWATER PUMP STATION INSTRUMENTATION AND CONTROL

REVISIONS

NO.	DESCRIPTION	DATE

PUMP STATION CONTROL RISER DIAGRAM AND SCHEDULE

Drawing No.

I-8CSS

Scale: NOT TO SCALE | 2017 RELEASE 1

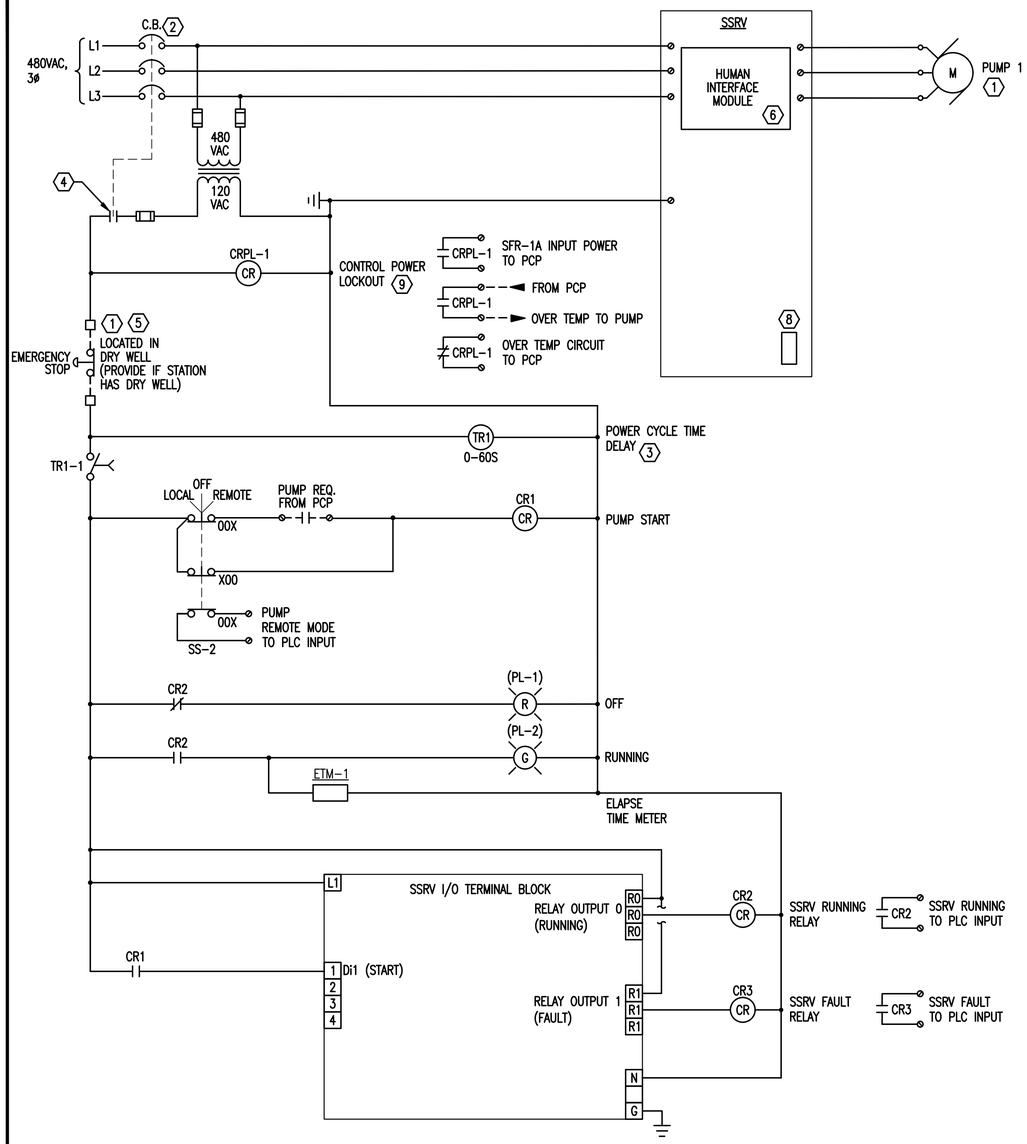

PUMP 1 SOFT START ELEMENTARY

NOT TO SCALE

(TYPICAL FOR PUMP 2)

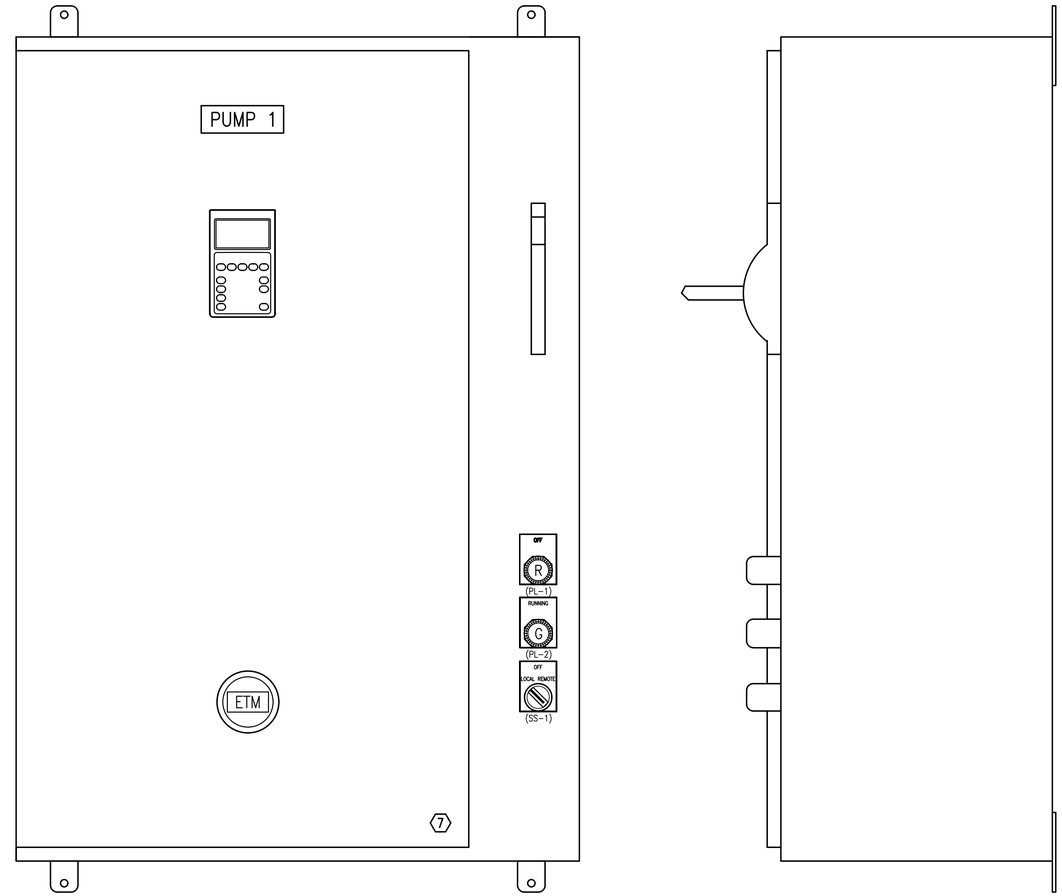

PUMP 1 SOFT START ELEVATIONS

NOT TO SCALE

(TYPICAL FOR PUMP 2)

DRAWING NOTES

1. UNLESS OTHERWISE NOTED ALL ITEMS AND EQUIPMENT ARE NEW.
2. SHORT CIRCUIT CURRENT RATING OF SOFT STARTER ASSEMBLY SHALL BE 65KRMS AMPERES MIN.
3. ALL INDICATING LIGHTS SHALL BE LED PUSH TO TEST TYPE.
4. GROUND AND WIRE MOTOR PER NEC.

SPECIFIC NOTES

1. EQUIPMENT LOCATED REMOTE FROM STARTER ENCLOSURE.
2. MAIN CIRCUIT BREAKER PROPERLY SIZED FOR MOTOR.
3. SET AT 10 SECOND DELAY FOR PUMP 1, 20 SECOND DELAY FOR PUMP 2.
4. AUXILIARY CONTACT CLOSES WHEN MAIN CIRCUIT BREAKER CLOSES.
5. EMERGENCY STOP (ES) USED ONLY ON WET PIT DRY PIT STATIONS. MOUNT ON WALL NEAR PUMP.
6. MOUNT HUMAN INTERFACE MODULE ON SSRV ENCLOSURE DOOR.
7. EQUIPMENT LOCATED REMOTE FROM PCP ENCLOSURE. STARTER SIZE DEPENDANT ON MOTOR HORSEPOWER. MAIN CIRCUIT BREAKER SIZE DEPENDANT ON MOTOR HORSEPOWER. PROVIDE OVERSIZED ENCLOSURE TO HOUSE DEVICES AS REQUIRED. ENCLOSURE TO BE NEMA 12.
8. PROVIDE ETHERNET COMMUNICATIONS FOR SSRV TO PLC.
9. RELAY SHALL BE CPRL-2 FOR PUMP 2

NANSEMOND 1646 SUFFOLK 1742 19 74 CITY of SUFFOLK, VIRGINIA

CITY OF SUFFOLK, VIRGINIA

DEPARTMENT OF PUBLIC UTILITIES
442 W. WASHINGTON STREET
SUFFOLK, VA 23434

PUBLIC FACILITIES MANUAL VOLUME II

WASTEWATER PUMP STATION INSTRUMENTATION AND CONTROL

REVISIONS

NO.	DESCRIPTION	DATE

SOLID-STATE STARTER ELEMENTARY DIAGRAM AND ELEVATIONS

Drawing No.

I-9CSS

Scale: NOT TO SCALE | 2017 RELEASE 1

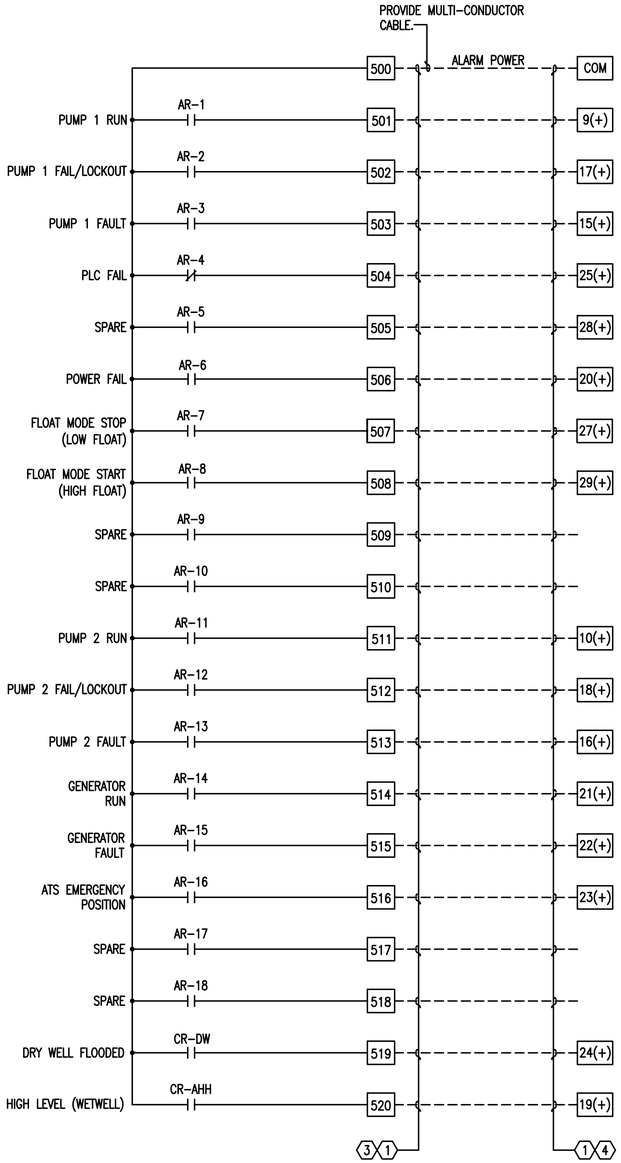

ALARM TERMINALS

NOT TO SCALE

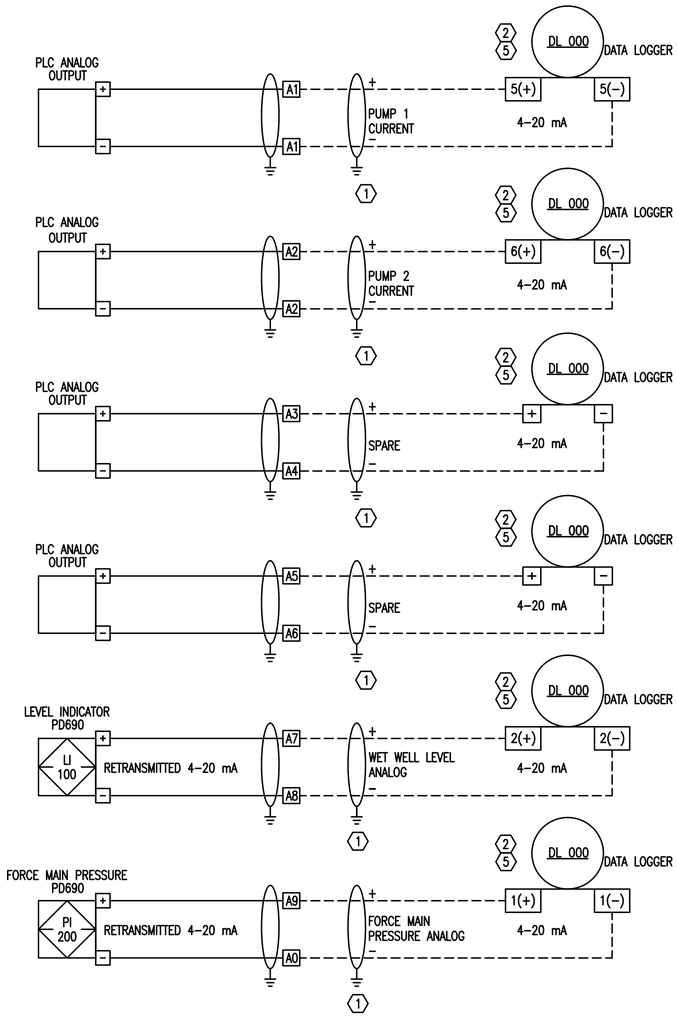

SPECIFIC NOTES

1. ALARM SIGNAL WIRING TO SCADA SYSTEM.
2. CONNECT SCADA SYSTEM TO PRESSURE AND LEVEL SIGNALS. VERIFY INPUT POINTS WITH CITY.
3. PUMP CONTROL PANEL TERMINATIONS.
4. SCADA SYSTEM TERMINATION POINTS.
5. SET SCADA SYSTEM SWITCH TO "CURRENT" POSITION.

NANSEMOND 1646 SUFFOLK 1742 19 74 CITY of SUFFOLK, VIRGINIA

CITY OF SUFFOLK, VIRGINIA

DEPARTMENT OF PUBLIC UTILITIES
442 W. WASHINGTON STREET
SUFFOLK, VA 23434

PUBLIC FACILITIES MANUAL VOLUME II

WASTEWATER PUMP STATION INSTRUMENTATION AND CONTROL

REVISIONS

NO.	DESCRIPTION	DATE

PUMP CONTROL PANEL SCADA CONNECTIONS

Drawing No.

I-10CSS

Scale: NOT TO SCALE | 2017 RELEASE 1

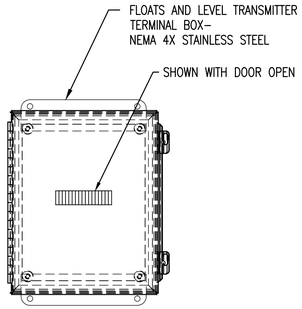

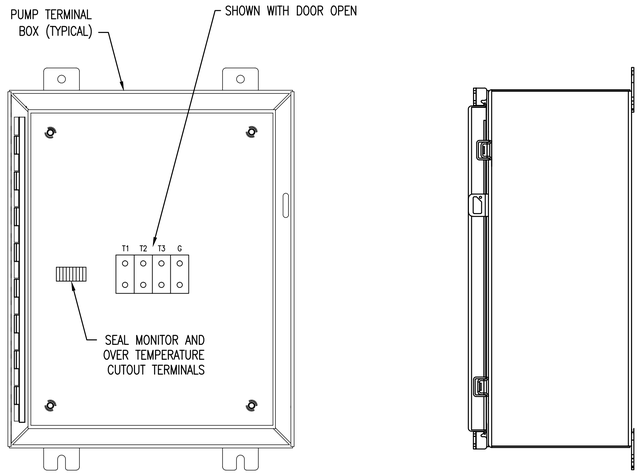

NOTE:
1. TERMINAL BOXES SHALL BE NEMA 4X STAINLESS STEEL.
2. MARK TERMINAL BOXES FOR PUMP SERVED.
3. PUMP TERMINAL BOXES NOT TYPICAL TO ALL SITES. REFER TO ELECTRICAL AND INSTRUMENTATION DWGS.

TERMINAL BLOCK LAYOUT
NOT TO SCALE

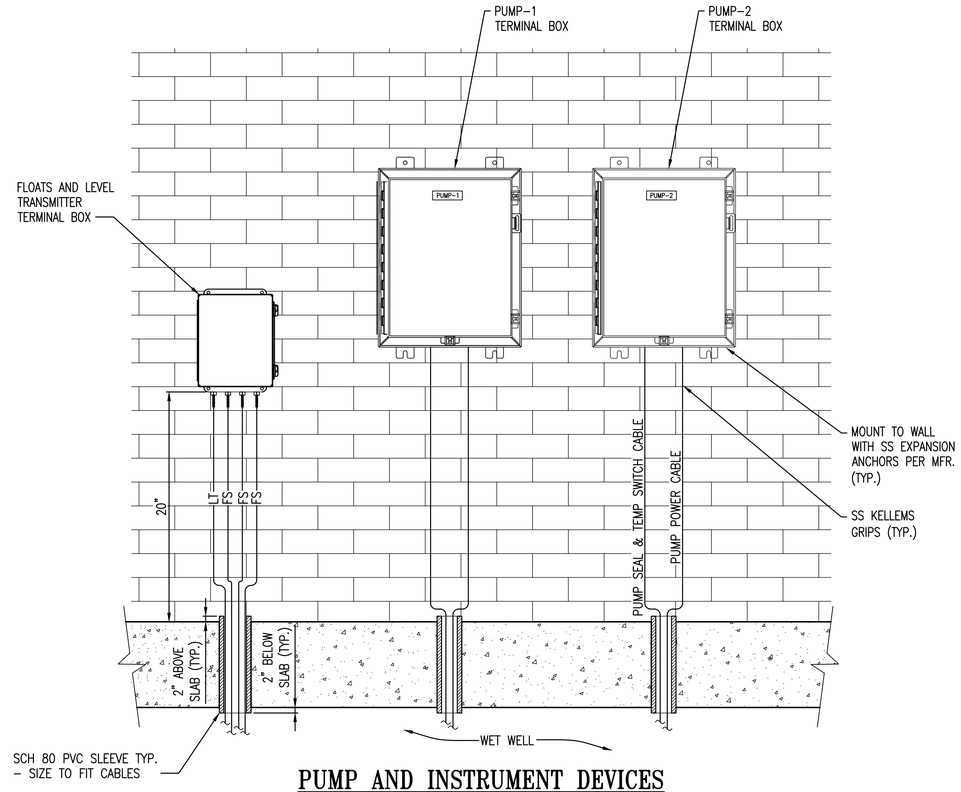

PUMP AND INSTRUMENT DEVICES TERMINAL BOX ELEVATION
NOT TO SCALE

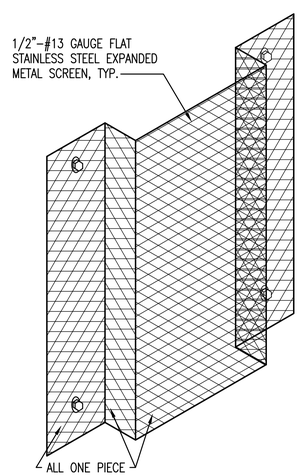

PROTECTIVE METAL SCREEN ENCLOSURE
NOT TO SCALE

DRAWING NOTES:
1. LAYOUT OF EQUIPMENT MAY VARY PER SITE. SOME SITES MAY NOT INCLUDE ALL EQUIPMENT SHOWN.
2. DIMENSIONS OF WIRE MESH ENCLOSURE SHALL DEPEND ON EQUIPMENT LAYOUT.

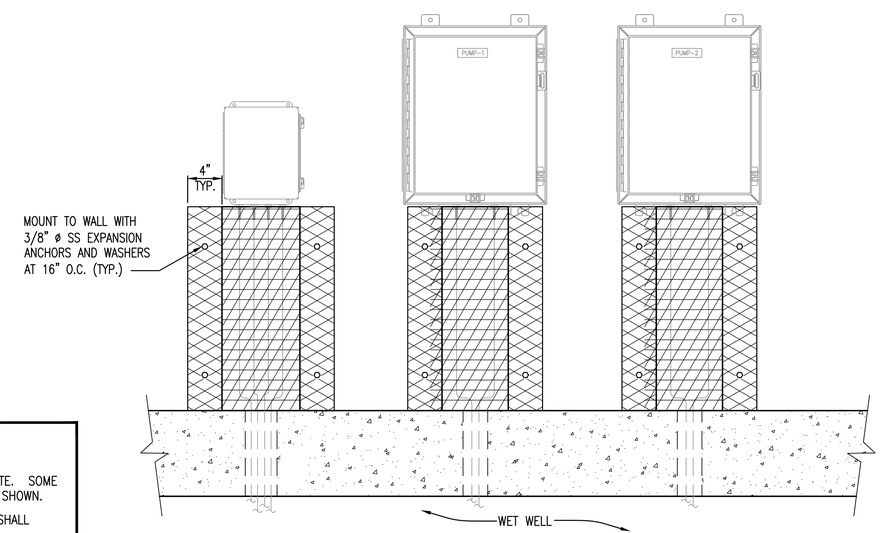

PROTECTIVE METAL SCREEN – ELEVATION
NOT TO SCALE

NANSEMOND 1646 SUFFOLK 1742 19 74 CITY of SUFFOLK, VIRGINIA

CITY OF SUFFOLK, VIRGINIA
DEPARTMENT OF PUBLIC UTILITIES
442 W. WASHINGTON STREET
SUFFOLK, VA 23434

PUBLIC FACILITIES MANUAL VOLUME II

WASTEWATER PUMP STATION INSTRUMENTATION AND CONTROL

REVISIONS

NO.	DESCRIPTION	DATE

TERMINAL BOX DETAILS

Drawing No.
I-11CSS

Scale: NOT TO SCALE | 2017 RELEASE 1

This page intentionally left blank.

APPENDIX J

VARIABLE FREQUENCY DRIVE

SPECIFICATIONS AND DRAWINGS

This page intentionally left blank.

APPENDIX J

VARIABLE FREQUENCY DRIVE SPECIFICATIONS

This page intentionally left blank.

SECTION 01302

VFD STATION SUBMITTALS

PART 1 - GENERAL

1.01 GENERAL

A. These specifications are intended to be used for wastewater pump stations with Variable Frequency Drive (VFD) controlled motors in the City of Suffolk, Virginia.

B. Terms used or referred to herein are defined in Chapter 2 of the City of Suffolk Public Facilities Manual (PFM), Volume II. The term "Engineer" shall be the "Engineer of Record", the term "City" shall be the "City of Suffolk, Virginia" and the term "Department" shall be the City of Suffolk, VA, Department of Public Utilities".

C. Prior to beginning the Submittals review process, the Engineer shall provide the Contractor and the Department a complete list of Submittals required.

D. The Contractor shall submit to the Engineer and the Department for review and approval such submittals as are required for the proper control of work, including but not limited to those submittals in the Engineer's list, specified elsewhere in the Specifications, on the Project Drawings and in the Public Facilities Manual (PFM) Volume II.

E. The Engineer shall maintain a complete updated submittal log and shall make the log available to the Contractor and the Department as requested. This log shall include the following items:

1. Submittal-Description and Number assigned.
2. Date to Engineer.
3. Date returned to Contractor (from Engineer).
4. Status of Submittal (Approved, Approved as Noted, Revise and Return, Rejected).
5. Date of Resubmittal and Return (as applicable).
6. Date material release (for fabrication).
7. Projected date of fabrication.
8. Projected date of delivery to site.
9. Status of O&M manuals submittal.
10. Specification Section.
11. Drawings Sheet Number.

1.02 TYPES OF SUBMITTALS

A. Shop drawings for manufactured or fabricated items, pipe layout or other schedules, diagrams and like material prepared specially for this project.

B. Product Data which include pre-printed material, manufacturer's descriptive literature, illustrations, catalog data, performance charts and the like intended to identify a part of the work but not necessarily prepared exclusively for this Project.

C. Samples which include physical examples of products, materials, assemblies or workmanship which are identical to a portion of the work and which establish standards for materials, workmanship, or appearance of the finished work.

D. Administrative data to include information required to support the administrative requirements of the Project as called for in the specifications.

E. Factory Acceptance Test (FAT) certification, Pre-Site Acceptance Test (Pre-SAT) results, and Site Acceptance Test (SAT) results. See Section 13012 for description of the FAT, Pre-SAT and SAT.

1.03 PROCEDURE FOR SUBMITTALS

A. Except where specifically stated otherwise all submittals shall be made to the Engineer for his approval. Submittals of all but administrative data shall be made in at least eight (8) copies. The Engineer shall provide to the Department two (2) copies for its review. The Department shall return one copy to the Engineer with the Department’s comments. Prior to approval of the submittals, the Engineer shall reconcile the Department’s comments. Two (2) copies of the submittal shall be retained by the Engineer and the other copies returned to the Contractor. Two (2) copies of all approved submittals shall be promptly provided to the Department. Submittals shall be complete for each component of work or system and shall include all inter-related portions of a system. At the completion of the project, the Engineer shall supply the Department with two (2) complete sets of all approved submittals as Record Copy.

B. Administrative data shall be submitted in triplicate (3 copies).

C. Electronic copies of submittals may be made in lieu of paper submittals. Record Copy shall be on CD and two (2) hard copies.

1.04 CONTRACTOR'S RESPONSIBILITY

A. It is the duty of the Contractor to check all Submittals prepared by or for him before submitting them to the Engineer for review. Each and every copy of the Submittals shall bear the Contractor's stamp showing that they have been checked. Submittals

submitted to the Engineer without the Contractor's stamp shall be returned to the Contractor for conformance with this requirement. Submittals shall indicate any deviations in the submittal from requirements of the Project Documents.

B. The Project Drawings shall not be reproduced for the purpose of making Submittals.

C. Determine and verify:

1. Field measurements.
2. Field construction criteria.
3. Catalog numbers and similar data.
4. Conformance with Specifications.

D. The Contractor shall furnish the Engineer a schedule of submittals fixing the respective dates of their submission, the beginning of manufacture, testing and installation of materials, supplies and equipment. This schedule shall indicate those submittals that are critical to the progress schedule.

E. The Contractor shall ensure that no work is begun on any item of work requiring an approved submittal until such approval is obtained.

F. The Contractor shall not begin any of the work covered by a drawing, data, or a sample returned marked "REVISE AND RETURN" OR "REJECTED" until a revision or correction thereof has been reviewed and returned to him, by the Engineer, with approval.

G. One approved copy of all submittals shall be held by the Contractor at the construction site.

H. Each submittal shall be assigned a sequential number by the Contractor, for purposes of easy identification, and shall retain its assigned number with appropriate subscript, on required resubmissions. The assigned number shall consist of the specification section number where the item is specified, followed by a sequential number indicating the number of submittals in that Section (e.g., 03300-11 is the 11th separate submittal for items specified in Section 03300). Resubmittals shall be identified with the same number as the original submittal, followed by the subscript R1, R2, etc. All products and materials submitted shall be clearly identified with the appropriate equipment name and number as it appears in the Project Documents.

I. The Contractor shall submit to the Engineer all drawings and schedules sufficiently in advance of construction requirements. The Engineer will endeavor to provide a written response within 14 calendar days from receipt of submittals.

J. All submittals shall be accompanied with a transmittal letter prepared in duplicate containing the following information:

1. Date.
2. Project Title and Number.
3. Contractor's name and address.
4. The Number of each Shop Drawing, Project Data, and Sample submitted.
5. Notification of Deviations from Project Documents.
6. Submittal Log Number conforming to Specification Section Numbers.

K. The Contractor shall be responsible for and bear all costs which may result from the ordering of any material or from proceeding with any part of work prior to the receipt of the approved submittals.

L. The Contractor shall be fully responsible for observing the need for and making any changes in the arrangement of piping, connections, wiring, manner of installation, etc., which may be required by the materials/equipment he proposed to supply both as pertains to his work and any work affected under other parts, heading, or divisions of drawings and specifications at no cost to the Owner.

1.05 ENGINEER REVIEW OF SUBMITTALS

A. The Engineer review of submittals will be only for conformance with the design concept of the Project and for general compliance with the information given in the Project Documents. The Engineer review and approval will not constitute an approval of dimensions, quantities, and details of the material, equipment, device, or item shown.

B. The review of submittals will be general, and shall not be construed:

1. as permitting any departure from the Project requirements;
2. as relieving the Contractor of responsibility for any errors, including details, dimensions, and materials;
3. as approving departures from details furnished by the Engineer, except as otherwise provided herein.
4. as approving Contractor's means, methods, techniques, sequences or procedures of construction or to safety precautions or programs incident thereto.

C. When reviewed by the Engineer, each of the submittals will be identified as having received such review being so stamped and dated. Submittals stamped "REVISE AND RESUBMIT" and with required corrections shown will be returned to the Contractor for correction and resubmittal.

D. Resubmittals will be handled in the same manner as first submittals. On resubmittals the Contractor shall direct specific attention, in writing or on resubmitted submittals,

to revisions other than the corrections requested by the Engineer on previous submissions. The Contractor shall make any corrections required by the Engineer.

E. If the Contractor considers any correction indicated on the drawings to constitute a change to the Project Drawings or Specifications, the Contractor shall give written notice thereof to the Engineer.

F. When the submittals have been completed to the satisfaction of the Engineer and the Department, the Contractor shall carry out the construction in accordance therewith and shall make no further changes therein except upon written instructions from the Engineer and the Department.

G. No partial submittals will be reviewed. Partial submittals will be returned rejected unless otherwise agreed. Unless otherwise specifically permitted by the Engineer, make all submittals in groups containing all associated items for:

1. Systems
2. Processes
3. As indicated in specific specification sections.

1.06 SUBMITTALS

A. When used in the Project Documents, the term "Submittals" shall be all drawings, diagrams, illustrations, schedules and other data which are specifically prepared by or for Contractor to illustrate some portion of the Work and all illustrations, brochures, standard schedules, performance charts, instructions, diagrams, and other information prepared by a Supplier and submitted by Contractor to illustrate material or equipment for some portion of the Work.

B. Manufacturer's catalog sheets, brochures, diagrams, illustrations and other standard descriptive data shall be clearly marked to identify pertinent materials, product or models. Delete information which is not applicable to the Work by striking or cross-hatching.

C. Submittals shall be checked and coordinated with the work of all trades involved, before they are submitted for review by the Engineer and shall bear the Contractor's stamp of approval as evidence of such checking and coordination. Submittals provided without this stamp of approval shall be returned to the Contractor for resubmission.

D. Each Drawing shall have a blank area 3-1/2 inches by 3-1/2 inches, located adjacent to the title block for the shop drawing approval stamp. The title block shall display the following:

1. Project Title and Number

2. Name of project building or structure
3. Number and title of the shop drawing
4. Date of shop drawing or revision
5. Name of contractor and subcontractor submitting drawing
6. Supplier/manufacturer.
7. Separate detailer when pertinent
8. Specification title and number
9. Specification section
10. Project Drawing Number

E. If submittals show variations from project requirements because of standard shop practice or for other reasons, the CONTRACTOR SHALL DESCRIBE SUCH VARIATIONS IN HIS LETTER OF TRANSMITTAL. The transmittal letter shall delineate compliance and exceptions taken to Specifications and Project Drawings. If acceptable, proper adjustment in the project shall be implemented where appropriate. If the Contractor fails to describe such variations, he shall not be relieved of the responsibility for executing the work in accordance with the Specifications and Project Drawings.

F. Data on materials and equipment include, without limitation, materials and equipment lists, catalog data sheets, cuts, performance curves, diagrams, materials of construction and similar descriptive material. Materials and equipment lists shall give, for each item thereon, the name and location of the supplier or manufacturer, trade name, catalog reference, size, finish and all other pertinent data.

G. For all mechanical and electrical equipment furnished, the Contractor shall provide a list including the equipment name, and address and telephone number of the manufacturer's representative and Service Company so that service and/or spare parts can be readily obtained.

H. Should the Contractor propose exceptions to specified equipment or products, they shall submit an installation list to the Engineer along with the required shop drawings. The installation list shall include at least five installations where identical equipment has been installed and has been in operation for a period of at least three (3) years. Substitution requests shall conform to the requirements of Chapter 4.6 of this PFM.

I. Only the Engineer and the Department will utilize the color "red" in marking submittals.

J. Before Startup can be scheduled, the Contractor shall furnish to Engineer one (1) set of approved submittals, complete and up to date showing the permanent construction as actually made for all reinforcing and structural steel, miscellaneous metals, process and mechanical equipment, yard piping, electrical system and instrumentation system, for provision to the Department.

1.07 SAMPLES

A. The Contractor shall furnish, for the approval of the Engineer, samples as required by the project documents or requested by the Engineer. Samples shall be delivered to the Engineer as specified or directed. The Contractor shall prepay all shipping charges on samples. Materials or equipment for which samples are required shall not be used in work unless approved by the Engineer.

B. Samples shall be sufficient size and quantity to clearly illustrate:

1. Functional characteristics of the product, with integrally related parts and attachment devices.
2. Full range of color, texture and pattern.
3. A minimum of three samples of each item shall be submitted.

C. Each sample shall have a label indicating:

1. Name of project
2. Name of Contractor and Subcontractor
3. Material or Equipment Represented
4. Place of Origin
5. Name of Producer and Brand (if any)
6. Location of Project

(Samples of finished materials shall have additional marking that will identify them under the finished schedules).

D. The Contractor shall prepare a transmittal letter in triplicate for each shipment of samples containing the information required in paragraph 1.04 above. He shall enclose a copy of this letter with the shipment and send a copy of this letter to the Engineer. Approval of a sample shall be only for the characteristics or use named in such approval and shall not be constructed to change or modify any project requirements.

1.08 MANUFACTURER'S LIST

A. Within 30 days after receipt of a Notice to Proceed, and before ordering any equipment or materials, the Contractor shall submit to the Engineer (and the Department) for approval a complete list of proposed manufacturers and fabricators for all materials and equipment to be used in this Project. The purpose of this submittal is to allow the Engineer and the Department to predetermine the

acceptability of proposed suppliers before issuance of purchase orders by the Contractor. Submission and acceptance of the manufacturers' list shall neither relieve the Contractor from submitting detailed shop drawings and product data for all materials and equipment nor shall it constitute prior acceptance of any specific item of equipment prior to submittal of shop drawings. After submission and acceptance of the manufacturers' list, the Contractor shall not deviate from the named suppliers and manufacturers without written approval from the Engineer and the Department.

1.09 OPERATING AND MAINTENANCE INSTRUCTIONAL PERIODS

A. Particular sections of the Specifications require that the Contractor furnish qualified personnel to instruct the Owner's personnel in the proper operation and maintenance of equipment and systems provided in this project. Such instructional periods shall be for the duration of time specified and in accordance with the requirements of the individual sections of the Specifications and with the following paragraphs.

1.10 OPERATION AND MAINTENANCE MANUALS FOR EQUIPMENT AND PRODUCTS

A. General:

1. The Contractor shall furnish for the Engineer’s review three (3) Operation and Maintenance Manual draft copies, one copy of which shall be provided to the Department for review and comment. The Engineer shall reconcile the Department’s comments with his comments prior to approval. The final manual shall be approved by the Engineer and the Department.

2. The Contractor shall furnish to the Engineer (for the Department’s use) three copies of the approved Operation and Maintenance Manual at least fourteen (14) calendar days prior to startup.

B. Operations and Maintenance Manual Preparation:

1. Manuals shall include operation and maintenance information on all systems and items of equipment. The data shall consist of: catalogs, brochures, bulletins, charts, schedules, approved submittals corrected to as-built conditions and assembly drawings describing location, operation, maintenance, lubrication, operating weight, and other information necessary for the Owner to establish an effective operating maintenance program. The following data shall also be included:

a. Title page giving name and location of facility, project drawings numbers, where shown and Specification Section where described.

b. Approved submittals of each piece of equipment.

c. Manufacturer's cuts and dimension drawings of each piece of equipment and details of all replacement parts.

d. Manufacturer's erection, operation and lubrication instructions for all equipment and apparatus, and complete listing of nameplate data.

e. Complete piping and interconnecting drawings.

f. Complete parts list with parts assembly drawing (preferably by exploded view), names and addresses of spare parts suppliers, recommended list of spare parts to be kept "in stock" and sample order forms for ordering spare parts. Lead time required for ordering parts shall be estimated.

g. Instructions with easily understood schematics or diagrams for disassembling and assembling the equipment for overhaul or repair.

h. The Contractor shall complete the three Forms A, B and C entitled “Equipment Registration, Parts List, and Maintenance Procedures Sheet” for each piece of equipment furnished under the project. These forms shall be included in the Operations and Maintenance Manual at the proper place. Example Forms A, B and C are included at the end of this section.

2. All items listed above that are of a sheet size of 8-1/2 inches by 11 inches or can be folded (no more than twice) to this size shall be bound in 2-inch maximum loose-leaf three-ring d-post type binders with clear plastic-pouch covers. The contents shall be fully indexed. All sheets shall have reinforced holes.

3. Submittal drawings 24 inches by 36 inches in size shall be folded to approximately 12 inches by 9 inches with drawing title box exposed along either edge. Submittal drawings descriptive of a single item of equipment shall be grouped together. All submittal drawings shall be placed in accordion-type folders and fully indexed on the outside of the folders in a neat and uniform manner.

4. All submittal drawings included in the binders and/or folders shall be those copies previously submitted for review and approval and shall bear the Engineer stamp of approval and comments as originally noted thereon.

C. Approval:

1. Subsequent to the Engineer of Record approval, the Contractor shall submit two complete sets of manuals, one paper and one searchable pdf, to the Engineer.

2. Startup will not be undertaken until approved Operation and Maintenance Manuals have been submitted.

3. Partial approvals of the final manual will not be made.

1.11 MANUFACTURER'S CERTIFICATES

A. General:

1. As specified in the various sections of these Specifications and herein, the Contractor shall furnish the Engineer with manufacturer's certificates stating that the equipment and products have been installed under either the continuous or periodic supervision of the manufacturer's field representative, that they have been adjusted and initially operated in the presence of the manufacturer's field representative, and that they are operating in accordance with the specified requirements, to the manufacturer's satisfaction. A copy of all manufacturers' certificates shall be bound in each Operation and Maintenance Manual.

2. A certificate submitted for equipment, a product, or component of a product, shall indicate test results proving that the equipment, product, or component of a product, meet the requirements of the project documents. An affidavit consisting of a statement by an official of the company manufacturing the equipment or product indicating that the information on the certificate is true and accurate shall accompany the certificate.

3. A statement originating from the Contractor, or any of his subcontractors, suppliers, or any other agent which merely indicates that a particular item of equipment, product, or component of a product, meets the requirements of the Project Documents shall not be considered a certificate. Any such submittal made in this manner will not be approved and the corresponding equipment, product, or component of a product, shall not be finally accepted.

4. Manufacturers' certificate shall be provided as required in individual sections.

B. Manufacturer's Representative:

1. The definition of "manufacturer's representative" shall be as follows: a representative from the manufacturer's plant, familiar with the actual problems of manufacturing, installing and operating the particular equipment or product and with enough years of experience in this field to determine the successful operation of the equipment or product.

2. As related to his obtaining the manufacturer's certificates, the Contractor shall include in this Project price the cost of furnishing competent and experienced manufacturer's representatives who shall represent the manufacturer on equipment and products furnished and installed under this project, to assist the Contractor to install, adjust, start up, and test the equipment and products in conformity with the Project Documents. After the equipment and products have been operated through the trial period for each phase of construction and before being put into permanent service, the manufacturer's representatives shall make all adjustments and tests required to provide that such equipment and products are in proper and satisfactory working order. This shall be performed prior to and separate from operational instruction.

C. Engineer's Responsibility

The Engineer will review with reasonable promptness all submittals with respect to the Project Documents and will indicate: Approved; Approved as Noted - No Resubmittal Required; Revise and Resubmit; or Rejected. The Engineer will return all submittals found incomplete stamped Rejected without a review.

1.12 DESIGN CALCULATIONS

Design calculations shall be presented in a neat, legible manner and shall bear the stamp and signature of a registered professional engineer, registered in the State of Virginia.

1.13 RECORD DRAWINGS

The Contractor will keep one copy of all Specifications, Drawings, Addenda, Change Orders and approved submittals at the site, in good order and annotated to show all changes made during the construction process. These shall be available to the Engineer and the Department and shall be delivered to the Department in both hard copy and digital (PDF) format upon completion of the project. Record drawings shall be prepared in accordance with Appendix E – Record Drawings of the PFM.

PART 2 – PRODUCTS

Not Used

PART 3 – EXECUTION

Not Used

FORM A - EQUIPMENT REGISTRATION

EQUIPMENT NAME: NUMBER: LOCATION:

MANUFACTURER: TELEPHONE:

ADDRESS:

SALES REPRESENTATIVE: TELEPHONE:

MANUFACTURER'S MANUAL NUMBER:

NAME PLATE DATA: MOTOR DATA:

ADDITIONAL EQUIPMENT DATA: ADDITIONAL MOTOR DATA:

PROJECT NO: DRAWING NOS:

SPECIFICATION SECTION:

FORM B - PARTS LIST

NAME OF PART: MANUFACTURER: CAT. NO.:

LOCAL SUPPLIER:

FORM C- MAINTENANCE PROCEDURES SHEET

EQUIPMENT NAME: _____ CRAFT: _____

PLANT AREA: _____ LEVEL: _____ LOCATION: _____

MAINTENANCE DESCRIPTION: _____ FREQUENCY: _____

SAFETY PRECAUTIONS: _____

TOOLS, PARTS, MATERIALS TEST EQUIPMENT: _____

(Separate sheet shall be filled out for each preventive maintenance procedure recommended by manufacturer, for each piece of equipment.)

END OF SECTION

This page intentionally left blank.

SECTION 13012

VFD STATION CONTROL SYSTEMS INTEGRATOR

PART 1 - GENERAL

1.01 SUMMARY

A. These specifications are intended to be used for wastewater pump stations with Variable Frequency Drive (VFD) controlled motors in the City of Suffolk, Virginia.

B. This section includes the requirements for the Contractor to obtain the services of **one** Instrumentation and Controls Subcontractor who shall be responsible for the coordination and integration of the instrumentation and control systems. This Subcontractor shall be referred to as the Control Systems Integrator (CSI). The CSI shall have total responsibility for the detailed design, procurement, fabrication, configuration, testing, installation, start-up and implementation of the pump station instrumentation and control system including control panels, instrumentation and electrical motor control equipment as specified herein. Also included is the furnishing, installation and testing of the SCADA system. **Single source responsibility is required.**

C. The CSI shall furnish all instrumentation and controls specified unless otherwise noted.

D. It is the Contractor's and the CSI's responsibility to Perform all testing, startup and demonstration efforts. It is the Engineer of Record's (EOR) responsibility to Coordinate and Oversee the startup and demonstration. The City and its Consultants are only obligated to Witness these activities.

E. Although specification references are made herein, other specification Sections may be referenced from those Sections. It shall be the Contractor's and the CSI's responsibility to obtain and follow applicable specification Sections for this project.

1.02 ABBREVIATIONS

CSI	Control Systems Integrator
FAT	Factory Acceptance Test
OIT	Operator Interface Terminal
I&C	Instrumentation and Control
I/O	Input / Output
PLC	Programmable Logic Controller
PCP	Pump Control Panel
Pre-SAT	Preliminary Site Acceptance Test

SAT	Site Acceptance Test
SCADA	Supervisory Control and Data Acquisition

1.03 CSI REQUIREMENTS AND RESPONSIBILITIES

A. The intent of this section is to provide integration, installation and testing standards for the PLC based Pump Control Panel and SCADA equipment. The wastewater pumping station will utilize software, PLC's and networking equipment to build a station control and SCADA system used to annunciate alarms, collect and archive station data.

B. The CSI shall furnish equipment, materials, software and appurtenances in accordance with the requirements of the Project technical specifications and drawings.

C. The CSI shall coordinate with equipment manufacturers to obtain information and submittals from manufacturers as required for the CSI to execute the work that the CSI is responsible for.

D. The CSI will be responsible for providing, installing, configuration, testing and startup of the Pump Control Panel and components including the PLC, OIT, networking equipment, instrumentation and SCADA System. The configuration programming will be the responsibility of the CSI to configure the PLC and OIT, to verify successful two-way data communication over the local network between the PLC and OIT.

E. The licensed programming software required for the configuration programming shall be the property of the CSI and shall be compatible with the City's current programming software standards and firmware version. The City's current PLC programming software is Allen Bradley, RSLogix 5000, and OIT programming software is FactoryTalk View ME. Contact the Department for the current required versions of these software packages.

F. Once installation and configuration programming is complete, the City of Suffolk designated Instrumentation and Control (I&C) Consultant will be responsible for programming the operation control logic in the PLC and the graphics in the OIT. Operational programming is limited to the station specific logic and graphics programming for the PLC and OIT. This programming will be done as an addition to the basic configuration files provided by the CSI.

G. Operational functions and programming detailed in this and other sections are for informational purposes only to provide a comprehensive picture of the nature and extent of the Pump Control and SCADA System.

H. Provide enclosures for the PCP and other panels as required by the Project Documents. Equip the enclosure with all components as shown on the Project Drawings.

I. Provide sufficient communication and configuration ports for the following purposes, as required to provide the specific functionality:

1. Ethernet Port for connection to the VFD and SSRV Ethernet Modules.
2. Ethernet Port for programming and configuration to the PLC and/or I/O devices as applicable.
3. Ethernet port for connection of the Human Machine Interface.

J. Provide the PCP with minimum of one additional spare Ethernet communications port.

K. Configure and connect field devices to the I/O points as described in Section 13346 Input/Outputs Points List and as shown on the drawings. Where I/O points are not used, label as spare and shall be wired to terminal blocks and as shown of the drawings.

L. Provide Operator Interface Terminal to graphically show levels, pressures, alarm, equipment status, and setpoints. The CSI shall demonstrate communications of the OIT to the PLC's. Graphical programming of the OIT displays shall be completed by the City's I&C Consultant.

1.04 QUALITY ASSURANCE

A. References

1. Materials and installation shall be in accordance with the latest revisions of the following codes, standards and specifications, except where more stringent requirements have been specified herein:
   a. ANSI - American National Standards Institute
   b. ASME - The American Society of Mechanical Engineers
   c. ASTM - The American Society for Testing Materials
   d. NEMA - National Electric Manufacturers Association
   e. UL - Underwriters Laboratories, Inc.
   f. ISA - Instrument Society of America
   g. IEEE - Institute of Electrical and Electronic Engineers
   h. NEC - National Electrical Code

B. Quality Control

1. All components shall be new and of the most current and proven design. All components shall be suitable for the intended application and shall be installed and wired in strict accordance with the manufacturer's requirements.

2. Control panels and their components shall be UL listed and labeled. UL Listing for Pump Control Panel (PCP) shall be UL-698A, for control panels with intrinsically safe circuits extending into hazardous areas. All control panels not having intrinsically safe circuits extending into hazardous areas shall be UL 508A Listed and labeled.

3. CSI

   a. The CSI shall be regularly engaged in the business of instrumentation and controls and shall be responsible for the furnishing, coordination and the installation of the equipment and specified herein.

   b. The CSI shall demonstrate the requisite resources of in-house staff, facilities and finances to complete the project in the schedule specified. These resources shall include personnel who are direct payroll employees of the CSI to engineer, design, implement, fabricate, stage, and test the entire integrated hardware and software system at the CSI's facilities. In-house personnel shall include all disciplines associated with system manufacture, fabrication, and integration to include but not be limited to engineering, drafting, analog and digital control systems and wiring design, construction, wiring, labeling, software configuration, programming, project management, quality control, and field engineering.

   c. The CSI shall assign a specific person to be the CSI Project Manager for this project. The Project Manager shall be a direct employee of the CSI, shall be assigned to this specific project, and shall be skilled and experienced in project management, and in the type of work described herein. The Project Manager shall be assigned for the period of the Project. Should it become necessary to replace the CSI's project manager, the Contractor shall submit to the Department the credentials of the person assigned as their replacement.

   d. The CSI shall maintain a UL listed fabrication shop located at the CSI facility for the assembly of the various control panels, cabinets, consoles, instrument racks, enclosures, and wiring required for this project. This shop shall be available for inspection by the Engineer to observe quality control and workmanship. The CSI facilities shall include hardware and software owned by the CSI Subcontractor for development and support of any system software, and any testing and demonstration equipment to be utilized on the project.

e. Alternatively, UL Listing requirement may be done by an Underwriters Laboratory (UL) field representative in accordance with UL's Field Listing program.

1.05 SUBMITTALS

A. Submittals shall be in accordance with the provisions set forth in Section 01302 and Chapter 4.6 of the PFM.

B. Unless the CSI has been previously approved by the Department, submit a CSI qualifications package for the proposed CSI for this project. The qualifications package shall include the following information: Company Background, Experience in Municipal Wastewater Pumping Station Applications, Project Plan for this Project, Information of the CSI's Facilities and Fabrication Shop, and three Letters of Reference summarizing the CSI's performance on similar projects.

C. Prior to obtaining any material, fabrication, or installation in connection with this Section, detailed shop drawings on all material shall be submitted and approved. Submittal requirements for equipment are listed in individual equipment specification sections referenced in this specification section. Requirements listed in this specification section are in addition to requirements listed in other specification sections.

D. If deviations are proposed, the CSI shall follow the procedures listed in Section 4.6 of the PFM. Should the Department elect to not accept a proposed deviation, the Contractor shall be obligated to provide the original design specified.

E. Drawings

1. Coordination Drawings

a. Submit coordination drawings for review and approval by the Engineer/Department.

b. Coordination drawings shall be prepared by the CSI and shall include the following, as a minimum:

1) Interconnection wiring diagrams showing control panel and field wiring to components and panels provided by other manufacturers. Indication of field wiring to components shall include terminations in intermediate terminal boxes, field devices and instrumentation, control panels and equipment. Diagrams shall include terminal numbers for terminations to equipment.

2) Control panel wiring diagrams for equipment control panels furnished or modified by the CSI
3) Scaled control panel elevations, panel layouts, equipment mounting racks.
4) Drawings shall be prepared by the CSI and shall be developed on a computer aided drafting (CAD) system. The CAD system shall be AutoCAD, latest version as approved by the Department. Drawings shall be printed on 24" high x 36" wide reproducibles. One set of reproducible drawings shall be submitted with the required number of sets of prints. Reproducibles and prints shall be full size 24" x 36".
5) Coordination drawings shall include wiring interconnections, terminations and terminal numbers for connections between equipment and devices and panels provided by the CSI.

2. Record Drawings shall be in accordance with the provisions set forth in Section 01302.

F. Operations & Maintenance Manuals shall be in accordance with the provisions set forth in Section 01302.

1. The CSI shall provide three operations and maintenance manual incorporating all the requirements as specified in each of the following individual equipment specifications:

a. Section 13343 VFD Station Control System Hardware
b. Section 13349 VFD Station Control System Description
c. Section 13402 VFD Station SCADA System
d. Section 13422 VFD Station Instrumentation

2. The final approved Operations and Maintenance Manual shall also be provided on compact disk (CD).

G. Testing, Startup and Demonstration Plans

1. The CSI shall develop a testing and demonstration plan for the equipment, controls and instrumentation that are furnished by the CSI. The plan shall consist of two main components, 1) testing and 2) start-up/demonstration. Both the testing and startup/demonstration shall include factory and site testing of component devices and pieces of equipment individually and as integrated systems. The plan shall be incorporated into the testing and startup/demonstration plan to be submitted by the Contractor.

2. The CSI shall utilize the Factory Acceptance Test (FAT) Check List (Appendix B-8 of the PFM) as guide to the minimum requirements for conducting the FAT. Notify the Engineer of Record and the City a minimum of 14 calendar days in advance to schedule the FAT. The FAT is a witnessed event.

3. The CSI shall utilize the Pre-Site Acceptance Test (Pre-SAT) Check List (Appendix B-9A of the PFM) as guide to the requirements for conducting the Pre-SAT. The Pre-SAT Check List is used to show field test results verifying that all wiring and connected components conform to plans and specifications. Notify the Engineer of Record and the City a minimum of 14 calendar days in advance to schedule the SAT. The Pre-SAT is not a witnessed event.

4. The CSI shall utilize the Site Acceptance Test (SAT) Check List (Appendix B-9B of the PFM) as guide to the minimum requirements for conducting the SAT. The SAT Check List is used to show field test results verifying that all systems conform to plans and specifications. Notify the Engineer of Record and the City a minimum of 14 calendar days in advance to schedule the SAT.

5. CLOSEOUT SUBMITTALS – The following items shall be submitted to the Owner for approval prior to the Start-Up and Demonstration Test:

   a. Certified FAT, Pre-SAT, and SAT reports
   b. O&M Manuals
   c. As-Built Drawings

6. Start-Up and Demonstration Plan of the components, equipment and systems shall include details of staff to be used, testing equipment to be used, listing of equipment and systems to be tested, and a detailed description for testing. Testing shall include final testing of calibrated ranges and actuation settings of instrumentation and field devices, testing of panel mounted controls and control stations, and testing of interlocks, status indication and alarms between panels and systems.

7. For the purposes of preparing the Start-Up and Demonstration Plan, the CSI shall assume that a minimum of six persons employed by the Owner will be witnessing the tests. The Contractor shall notify the Owner in writing a minimum of fourteen (14) calendar days prior to performing start up and demonstration of operation of the equipment and systems.

8. The CSI shall have a representative available on site during the Start-Up and Demonstration. The CSI's representative shall participate in the testing and demonstration of the facility, including testing of individual

pumps, testing of multiple operations of pumps, and failure testing and demonstration.

H. Sequence of Construction

1. The CSI shall develop and submit a sequence of construction to include installation of the Pump Control Panel and the level transducer. The sequence of construction shall be integrated with the overall sequence of construction to be developed and submitted by the Contractor.

PART 2 – PRODUCTS

NOT USED

PART 3 - EXECUTION

3.01 CSI COORDINATION AND MEETING REQUIREMENTS

A. General

1. The CSI shall perform the detailed integration and coordination of the control systems and instrumentation equipment furnished in accordance with this specification. Work shall be performed by the CSI's own staff and related equipment manufacturer's engineers where applicable, including submittal drawings, operations and maintenance manuals, as-built shop drawings, equipment testing, operational demonstrations, and other applicable documentation.

2. Coordination with other equipment manufacturers: The CSI shall be responsible for coordinating with the other equipment manufacturer's in order to obtain submittals to be used for coordination of wiring interface. The CSI shall review and coordinate with the equipment manufacturer's submittals.

3. Initial Coordination Meeting:

The CSI shall be responsible for scheduling and holding an initial coordination meeting with the Contractor, and Department to review the scope of the project, and the project schedule. The meeting shall be attended by the CSI project manager, and all other parties that are involved in the integration of the control system. The Contractor shall provide written notice of the meeting date at least fourteen (14) calendar days prior to the requested date, and shall have submitted the testing and demonstration plan prior to the meeting date.

3.02 TESTING REQUIREMENTS

A. Correct manufacture of the pump control system is critical to the successful and timely turn-over of facilities to the Department. These Specifications require a Preliminary Factory Acceptance Test (Pre-FAT), Factory Acceptance Test (FAT), a Preliminary Site Acceptance Test (Pre-SAT), and a Site Acceptance Test (SAT). Checklists for these tests are located in Appendix B of this PFM. Specific procedures, personnel required at the tests and Department Charges for certain failed tests are included in Appendix B-12 Pump station Acceptance Procedures, of the PFM.

B. Factory Acceptance Testing (FAT)

1. The CSI shall submit for review a detailed FAT Procedure document including the FAT Check List detailing the procedures, methodology and equipment required to be used for the FAT.

2. The CSI shall perform a complete inspection of the PCP and Motor Control Panel components, wiring and devices to verify compliance with as-built drawings and documentation.

3. The CSI shall develop a configuration program for the PLC and OIT to communicate and display data transferred between the PLC and OIT. Demonstration shall show transmission of data from the PLC input to the OIT screen and activation of PLC outputs from the OIT screen displays.

4. The CSI shall perform an unwitnessed Pre-FAT utilizing the FAT Checklist.

5. Once the PLC and OIT configuration programs have been developed and installed and a successful Pre-FAT has been performed, the Contractor shall forward copies of the PLC and OIT configuration programs and the completed Pre-FAT Checklist to the EOR and the City's I&C Consultant. The Contractor shall then schedule the FAT with the Engineer of Record (EOR). The Contractor shall give at least a two week (14 calendar days) advance notice of the proposed date of the FAT to coordinate schedules of required personnel.

6. Prior to the scheduled date of the FAT, the City's I&C Consultant shall provide the CSI with the operation logic programs for the PLC and OIT. The CSI shall install the PLC and OIT operation programs prior to the FAT.

7. The FAT shall be performed by the CSI in witness of the Department and/or the City's I&C Consultant. The FAT Check List, upon successful conclusion of the FAT, shall be signed by both the CSI and the witness.

8. The FAT shall include the complete setup of the Pump Control Panel including the PLC, OIT, network equipment and the Motor Control Panels. The FAT shall demonstrate successful transmission of two-way data between the PLC, OIT, and Ethernet I/O adapters, and demonstration of hardwired control and signals between the Pump Control and Motor Control Panels.

9. The FAT is a "Pass/Fail" test. Upon FAT failure, the witness may, at their discretion, declare that the FAT has failed and end the testing procedure. In the event of a FAT failure, the CSI shall correct all deficiencies and reschedule the FAT with the Department's I&C Consultant. This process shall be repeated until the FAT is considered successful by the Department.

10. The CSI shall provide the signed FAT Check List to the Department for approval prior to releasing the panels for shipment or installation.

C. Preliminary Site Acceptance Testing (Pre-SAT)

1. The CSI shall conduct a preliminary (unwitnessed) SAT using the Pre-SAT Check List. Only after the Pre-SAT checklist is reviewed and approved by the City will the SAT be allowed to be scheduled. The Contractor shall give at least a two week (14 calendar days) advance notice of the proposed date of the SAT to coordinate schedules of required personnel.

D. Site Acceptance Testing (SAT)

1. The CSI shall submit for review a detailed SAT Procedure document including the SAT Check List detailing the procedures, methodology and equipment required to be used for the SAT.

2. The SAT shall begin after receipt of approved shop drawings and installation of the system components at the site. These shall include:

a. "As-built" drawings for the Pump Control Panel.

b. "As-built" shop drawings for the Motor Control Panels

c. Certified FAT results.

d. Pump station power is connected and in operation.

e. All control wires are pulled, labeled, connected, tested, and verified.

f. Pump Control Panel and Motor Control Panels have been installed at the station and wiring terminations (control and power) are

completed and verified.

g. All network cables are pulled, labeled, connected, and connections tested.

h. All network devices are installed, connected, and communications verified.

i. Telog Panel is installed, and wiring connection between the Telog Panel, Pump Control Panel, and field devices are installed and verified.

j. All pumps, instrumentation, and mechanical components are installed and operational.

k. Instruments are field calibrated and ranges verified.

l. Spare parts are available on-site or have been delivered to the Department.

3. The CSI shall perform a complete inspection of the PCP and SCADA System Panel components and wiring and devices to verify compliance with as-built drawings and documentation.

4. The City's I&C Consultant will install the operation programs for the PLC and OIT upon notification by the CSI that the equipment is ready for them and that there is power to the pump station.

5. The CSI shall perform operational testing of the PCP and SCADA System by verifying components, wiring, configuration, and communications. Simulate all pump station control conditions, verify successful station control operations, and that data is detected by the PLC and displayed on the OIT.

6. The CSI shall actuate all field devices as practical or simulate signals at the furthest point possible from the PLC and SCADA System inputs. The Contractor shall be available to operate equipment and test status feedback as required.

7. The SAT shall be performed by the CSI in witness of the Department and/or the City's I&C Consultant. The Contractor shall schedule the SAT with the Engineer of Record (EOR). The SAT Check List, upon successful conclusion of the SAT, shall be signed by both the CSI and the witness. The Contractor shall give at least a two week (14 calendar days) advance notice of the proposed date of the SAT to coordinate schedules of required personnel.

8. The SAT is a "Pass/Fail" test. Upon SAT failure, the witness may, at their discretion, declare that the SAT has failed and end the testing procedure. In the event of a SAT failure, the CSI shall correct all deficiencies and reschedule the SAT with the Department's I&C Consultant. This process shall be repeated until the SAT is considered successful by the Department.

3.03 PUMP STATION OPERATIONAL STATUS

CSI shall coordinate work with Contractor so work performed by different trades will not be in conflict.

3.04 INSTRUMENTATION

The CSI shall coordinate and supervise the installation of instrumentation equipment furnished by the CSI as specified. Instrumentation shall be installed in accordance with the requirements of Section 13420, CS-FVNR Station Instrumentation.

3.05 FIELD QUALITY CONTROL

A. Installation: The CSI shall provide on site supervision and advice to the installing contractor to insure the equipment is installed in accordance with the specifications and the manufacturer's requirements.

B. Inspections & Field Calibrations

1. Any and all testing equipment required for this project shall be owned by the CSI so as to be immediately available for this project.

2. Calibrate instrumentation and place each system into operation. The commissioning of each system shall include the overall calibration and tuning of all control loops and sequences to provide stable control of the process. The validity of all process inputs and outputs for each system shall be checked and corrected during the system commissioning. Final adjustment and calibration shall be performed for all equipment prior to initiation of final testing.

C. Field Demonstrations

1. Demonstrate the control features of each panel and associated field mounted instrumentation and control equipment, to verify that each panel performs the required control functions and logic as shown on the Project Drawings or as specified. Control features shall include relay energization, initiation of alarm conditions, resets, interlocks, set point activation, and other functions of the control panels.

2. Equipment shall be field demonstrated to operate satisfactorily in the presence of the Department, and shall be conducted in accordance with the CSI's testing and demonstration plan that has been reviewed by the Engineer. Field demonstrations shall be performed after successful installation, calibration and testing of each control panel.

3. In addition to demonstrating the operation of standard control features, special control panel functions shall be demonstrated as specified for each panel.

4. The Contractor shall provide the necessary test equipment, process media, materials, supplies, and qualified test personnel to perform the field demonstrations as specified herein.

5. Field instrumentation control signals that are required to demonstrate the operation of associated control panels may be simulated upon approval of the Department.

6. In the event of failure of the field demonstration, the Contractor shall perform the necessary corrections and re-demonstrate, at the Contractor's own cost and expense, for the affected equipment as directed by the Department.

END OF SECTION

This page intentionally left blank.

SECTION 13343

VFD STATION CONTROL SYSTEM HARDWARE

PART 1 - GENERAL

1.01 These specifications are intended to be used for wastewater pump stations with Variable Frequency Drive (VFD) controlled motors in the City of Suffolk, Virginia.

1.02 ABBREVIATIONS

CSI	Control Systems Integrator
I/O	Input / Output
OIT	Operator Interface Terminal
PLC	Programmable Logic Controller
PCP	Pump Control Panel
UL	Underwriters Laboratory
UPS	Uninterruptible Power Supply
TVSS	Transient Voltage Surge Suppressor
SCADA	Supervisory Control and Data Acquisition

1.03 SCOPE

A. The CSI shall be capable of performing the fabrication, installation, calibration, configuration, programming and other functions that are required for and incidental to providing the pump station control system. The CSI shall provide all labor, tools, equipment and software as required to perform the functions as specified.

B. The requirements of this section include all labor, materials, equipment and services necessary for and incidental to the complete and satisfactory installation of the Pump Control Panel (PCP), and associated equipment that will make up the primary element of the pump station control and monitoring system. Automatic control and monitoring of the pump station operation and equipment as well as interfacing with the City's SCADA System shall be accomplished using hard wired I/O connected to the SCADA System.

C. The control system shall consist primarily of a PLC with logic based software, I/O cards for field and control wiring interface and an OIT for operator interface and monitoring. The PLC shall be used for processing I/O for monitoring and control of the station as well as repeating I/O for transmission to the City's SCADA System. The control system shall provide alarm annunciation, mechanical and electrical equipment and systems monitoring, data collection and trending, and monitoring of the station functions to the SCADA System.

D. The CSI shall be responsible for the furnishing of the specified components of the control system, including the PLC, OIT and components for the pump control panel (PCP), specified herein, and the configuration programming of the PLC and OIT. Operational programming of the PLC and OIT shall be the responsibility of the Department's designated representative.

1.04 QUALITY ASSURANCE

A. Qualifications of Manufacturer:

1. All equipment furnished under this Section shall be furnished by manufacturers who meet the quality, workmanship, and experience requirements as specified in the General Provisions section of this Project and Section 13012.

2. To the extent possible, all PLC and OIT equipment and software specified under this section shall be furnished by a single manufacturer who shall have at least five years experience in the design, production, assembly, and field service of equipment of like size and type.

3. Materials and installation shall be in accordance with the latest revision of the following:

   a. Underwriters Laboratories (UL)
   b. National Electrical Manufacturer's Association (NEMA)
   c. Institute of Electrical and Electronics Engineers (IEEE)
   d. National Electric Code (NEC)
   e. International Society of Automation (ISA)

1.05 SUBMITTALS

A. Submittals shall be in accordance with the provisions set forth in Section 01302 and Chapter 4.6 of the PFM.

B. Provide manufacturers descriptive information on all equipment and components provided. Equipment literature shall indicate operational ranges, ratings, certifications, limitations, installation recommendations and warrantees.

C. Provide scaled detail drawings for each control panel fabricated for this project. Drawings shall be complete with a Bill of Materials (quantity, description, manufacturer and part number), electrical circuit diagrams, and I/O diagrams showing terminals, wire numbers and configuration of field devices.

D. Provide scaled drawings showing mounting details, locations, interconnections and other information pertaining to field installation.

E. Submittals shall include the following for the PCP:

1. Interconnection diagrams including terminal identification for all field connected devices.

2. Symbol list and legend for all symbols used in the submittal.

3. Power requirements and connection information for all components requiring external power.

4. Interconnection cable for external connections (e.g. shielded No. 16-2 AWG).

5. Identification of all conductors to be terminated in the field.

6. Identification numbers for all spare conductors, input/output modules, and terminals.

7. Submittals shall include a system schematic diagram showing all equipment/modules, devices, power connections and data links for the complete system. Diagrams shall include device identification, terminal numbers and communication port identifiers, cable and cable connectors.

8. Submit a complete spare parts list for equipment specified to be furnished under this Project and a manufacturer's recommended spare parts list.

9. Submittals for PLC hardware and components, and OIT hardware and components shall include catalog data, installation and maintenance instructions, and detailed schematics on cabling and wiring connections.

10. Elevation views of interior panel layouts, including equipment, wiring and terminals.

F. Provide catalog data for the following:

1. Equipment dimensions, including shipping splits, stub-up locations and shipping weights.
2. All major components.
3. PLC system
4. OIT
5. Digital Displays
6. Pilot lights and switches

7. Surge protection devices
8. TVSS
9. UPS
10. Wiring Diagrams.

G. Each submittal shall be provided with a detailed list. Any deviations from the specifications and Project Drawings shall be addressed in strict conformance with the provisions set forth in Section 01302 and Chapter 4.6 of the PFM.

H. Each data sheet shall be marked with the tag number for the device and the data sheet shall be marked with the part number or model number of the specific item to be provided under this project. Data sheets not marked as provided above may be cause for rejection of the shop drawing submittal.

I. Operations and maintenance manuals shall be in accordance with Section 01302 and as specified herein.

1. O&M manuals shall include the following information as a minimum:
2. System Specifications
3. Electrical Power Requirements
4. Assembly and Installation Procedures
5. Power-up Procedures
6. Troubleshooting Procedures
7. Explanation of internal fault diagnostics
8. Shut-down Procedures
9. Recommended Spare Parts List
10. Description of operation for OIT and workstation functions
11. Manufacturer's troubleshooting guide and instructions for PLC and OIT hardware

1.06 WARRANTY

A. The warranty shall provide (a) a minimum of next-day, on-site service for emergency failures, and (b) replacement of the defective component within one week, if repairs cannot be affected within that time. A five calendar day response time, on-site service, is required for non-critical failures. Work under the warranty shall be provided by the CSI responsible for the system installation. This warranty shall cover a period of one year from the date of final acceptance of the project unless otherwise specified. The Department shall be the sole determiner of the severity of a failure and whether the failure is an emergency or non-critical failure.

PART 2 - PRODUCTS

2.01 ELECTRICAL

A. Wires within control panel: All wiring shall be made in horizontal and vertical runs, and groups of wires to and from common points shall be made in PVC wire ducts and adequately supported. Analog and discrete signal wiring shall be in separate wire ducts, or if required to be in the same duct they shall be separated with vertical dividers.

1. Panel Wiring:

a. Type MTW or TFFN color coded stranded copper.

1) AC Power = Black
2) AC Control = Red
3) Neutral = White
4) Ground = Green
5) DC Control Circuits = Blue
6) DC +24 V Supply = Yellow
7) DC 24 V Supply Common = Brown
8) DC +12 V Supply = Red/yellow stripe
9) DC 12 V Supply Common = Brown
10) Rated for 600 Volts, 105 degrees C. Sized for current to be carried, but not less than No. 16 AWG.
11) Twisted-Shielded Pair (TSP) = Gray or black. Wire size minimum is 18 AWG.
12) Ethernet wiring shall be CAT-5E Shielded

2. Special Signal Circuits:

a. Manufacturer's standard cables or recommend cables.

3. Wire Identification:

a. Wire IDs shall be numbered and tagged at each end of termination.

b. Tags shall be legible with machine printed markings and numbers. Numbers shall be arranged and sized for easy identification without removing wire from terminal strip. Each wire shall be marked with unique numbers, identical on both ends.

c. Tags shall be on heat shrinkable irradiated polyolefin that will not smudge or fade when printed. Adhesive or taped on tags are not acceptable. Handwritten markings will not be allowed.

d. Labels shall be produced using Brady TLS 2200 Thermal Labeling System.

2.02 CONTROL PANEL TERMINAL BLOCKS

A. Terminal blocks shall be provided for all external connections, plus a sufficient number of spares to provide no less than twenty percent (20%) extra terminals. Each used, unused and/or spare input and output of the PLC control system shall be terminated to a terminal block.

1. No more than two wires shall be connected to any one terminal block.

2. Splices shall not be permitted in control panels; all wiring shall be terminated at a terminal.

3. Electrical power, control and alarm wiring shall be terminated in terminal block assemblies separate from blocks used for analog signal wiring.

4. All terminals shall be TS 32 DIN rail mountable. End plates shall be provided to isolate different signal types. Interconnections between terminals shall be made with a screw type fixed bridge. Each group of terminal blocks shall be secured with an end clamp.

5. Marking System: Mark terminal block and terminal strip numbers as shown on the panel control diagrams and loop drawings. Terminal markings shall be black numbers/letters permanently engraved on white background. Handwritten markings will not be allowed.

6. DIN Rail shall be 35 mm x 7.5mm standard aluminum DIN rail.

7. General Purpose Terminal Blocks:

   a. Rated Voltage: 600 Volts.
   b. Rated Current: 30 Amps.
   c. Wire Sizes: #26 to #10 AWG.
   d. Width: 0.25-inch
   e. Color: Gray
   f. Manufacturer: Weidmuller ZDU (Single) or (double).

8. Ground Terminal Blocks:

   a. Wire Sizes: #26 to #10 AWG.
   b. Width: 0.25-inch

c. Color: Green & Yellow
d. Manufacturer: Weidmuller ZDU.

9. Fused Terminal Blocks:

a. Rated Voltage: 600 Volts
b. Rated Amperage: 25 Amps
c. Wire Sizes: #26 to 8 AWG
d. Width: .4 inch
e. Color: Black
f. Indicator: LED
g. Manufacturer: Weidmuller, WSI 6.
h. Provide fuse blocks as required to protect circuits, power supplies, etc as shown on Project drawings and for each individual PLC analog input loop.

10. Grounding:

a. Copper grounding lug for signal and shield ground connections shall be provided.
b. Ground the ground bus at a common signal ground point in accordance with National Electrical Code requirements.
c. Ground terminal block rails to ground bus.
d. Provide grounding for each analog loop:

1) DC power supply common.
2) Group and connect shields at PLC Panel and tie to common panel ground.

2.03 PUSH BUTTONS, SELECTOR SWITCHES, AND PILOT LIGHT UNITS

A. The CSI shall furnish and install all controls required to be installed in control panels and enclosures required to be furnished by the CSI. Controls provided for installation in control panels and enclosures specified to be provided by manufacturers and suppliers other than the CSI are not required to be furnished by the CSI.

B. Push buttons, selector switches, and pilot light units shall be 30.5 mm NEMA/UL Type 4/13 rated devices as manufactured by Allen-Bradley, Bulletin 800T, no substitutions.

C. Provide sufficient contact blocks on devices in arrangements shown on the Project Drawings such that all required functions are provided. No more than two wires shall be terminated on each terminal.

D. Controls shall operate on 120 VAC power.

E. Pilot light units shall be LED type and be wired for "push-to-test" operation. Pilot light units shall be 120 volt transformer type. Pilot light units shall be provided with interchangeable color caps.

2.04 POWER SUPPLIES

A. Power supplies for installation in the control panels shall be provided as required for powering of instruments that require external DC power, including PLC's, Ethernet switch, transmitters and OIT.

B. Power supplies shall convert 120VAC, 60Hz power to 12 or 24VDC power of appropriate voltages with sufficient voltage regulation and ripple control to assure that instruments being supplied are operating within their required tolerance.

C. Output over voltage and over current protective devices shall be inherent in power supplies to protect instruments from damage due to power supply failure and to protect the power supply from damage due to external failure.

D. Performance Specifications:

1. Input Voltage: 104-127VAC.
2. Input Frequency Range: 47-63Hz.
3. Harmonic Ripple Affect: 0.1% peak to peak.
4. Polarity may be used positive or negative.
5. Short Circuit Protection: Automatic circuit protects the power supply if the output is shorted continuously. There shall be automatic return upon removal of a short circuit.
6. Operating Ambient Temperature: 0-50 degrees C.
7. Recovery Time: Less than 20 microseconds, one-half load to full load.
8. Output Voltage Adjustment: ±5% minimum.
9. Power supply mounting should be in such a way that the dissipated heat does not affect other components within the panel layout.
10. All DC loads within the panel shall be fused.
11. Manufacturer: IDEC, OMRON.
12. Power calculations shall be provided for load requirements. Power supply shall be rated for 150% of load as a minimum.
13. Power supply shall be UL-508 Listed.

2.05 SURGE/TRANSIENT PROTECTION (LINE SURGE PROTECTION)

A. Transient Voltage Surge suppression (TVSS) shall be provided to protect the components of the control panels against damage due to electrical transients induced by lightning and nearby electrical systems.

B. Provide TVSS for 120 VAC control power circuits in PCP. All incoming AC sources shall be protected by the Cutler Hammer AEGIS-HW style surge protector.

2.06 SURGE/TRANSIENT PROTECTION (CURRENT LOOP SURGE PROTECTION)

A. All analog wiring from field mounted transmitters, receivers, and related devices shall be protected by a MTL, Inc. model SD32. The surge protection shall be mounted within the control panel and they shall protect the PLC I/O cards and related equipment from damage.

B. Performance Specifications:

1. Supply Voltage, Line to Line: 32V typical.
2. Supply Voltage Line to Ground: 28V maximum.
3. Minimum Life: >1000 operations with 200A, 10x1000 microseconds.
4. Operating Temperature Range: -40 to +80 degrees C.
5. Manufacturer and Type: MTL, Inc., SD32.

C. All analog field mounted transmitters shall be protected by a Bourns Model 1669-06. These surge protectors shall be mounted at the field equipment to protect the transmitter from damage.

D. Performance Specifications:

1. Supply Voltage, Line to Line: 30V maximum.
2. Supply Voltage Line to Ground: 28V maximum.
3. Resistance Added to Loop: 44 ohms maximum.
4. DC Clamping Level, Line to Ground: 36V-±10%.
5. Operating Temperature Range: -40 to +100 degrees C.
6. Impulse Clamping Level, Line to Line: 50V maximum.
7. Impulse Clamping Level, Line to Ground: 70V maximum.
8. Surge Life: 20 kA 8/20 microseconds, 20 times.
9. Surge Life: 1kA; 10/1000 microseconds, 1000 times
10. Housing: ¾” pipe nipple with ¾-14 NPT on one end.
11. Manufacturer and Type: Bourns, Model 1669-06.

E. Provide surge protective devices in PCP and VFD’s for all analog circuits entering and leaving the panels from an instrument or a 4-20 mA producing device.

2.07 UNINTERRUPTIBLE POWER SUPPLY (UPS)

A. UPS-EATON EX as manufactured by EATON, sized to provide a minimum of 2 hours of backup power for PCP control panel and equipment while station is under backup power operating conditions. UPS shall be provided with a by-pass switch.

2.08 ISOLATORS

A. Provide signal isolators in control panels for 4-20 mA loops where required to prevent ground loop or circuit load problems, and as indicated on the Instrumentation drawings.

B. Isolators shall have an input power of 24VDC and be DIN rail mount. Where circuit loading exceeds the maximum allowable resistance for the circuit, provide 4 wire type isolators with 120 VAC input.

C. Accuracy shall be ±0.10% over ambient temperature range of 0-50 degrees C.

D. Isolators shall allow for field adjustments of input signal offset and span.

1. Isolators shall be AGM Series 4000, or as required for circuit loading.

2.09 CONTROL PANEL ENCLOSURE FOR PCP

A. Provide enclosure as indicated on the Instrumentation drawings. Enclosure for PCP shall be, NEMA 12.

B. NEMA 12 enclosure for interior installation shall have the following features:

1. 12 gauge steel construction.
2. Smooth continuously welded seams.
3. Heavy gauge continuous piano hinge.
4. Oil resistant door gasket.
5. 3-point latching and key locking handle, spring roller type
6. Finish shall be manufacturer's standard.
7. Document pocket mounted on the interior of door.
8. Subpanel constructed of 14 gauge steel, minimum, with white enamel paint finish, intermediate stiffeners and Type 316L stainless steel hardware.
9. Exterior shall be two coats of ANSI 61 Gray 1-part epoxy by Sherwin Williams.
10. Panel shall be UL listed.

C. Modifications to the enclosure shall maintain the NEMA Type 12 rating of the

enclosure.

D. Enclosure shall be as manufactured by Hoffman Engineering.

2.10 MISCELLANEOUS PANEL EQUIPMENT

A. Service Lights:

1. Internal panel service lights shall be provided and shall operate on 120 VAC power.

2. Light shall be top mounted fluorescent with manual switch.

3. Light shall be mounted internally at the top front of the enclosure.

4. Light shall be Hoffman fluorescent fixture ALD25D18R with F15T8 bulb.

B. Service Outlets:

1. Provide 120V, 15A DIN rail mounted convenience duplex receptacle inside the enclosure.

2. Receptacle shall be Phoenix Contact EM-DOU.

C. Elapsed Time Meters:

1. Elapsed time meters shall be non-resetting 2.5-inch Big Look Yokogawa Model 240211AAAB.

D. Identification Nameplates and Legend Plates:

1. Nameplates shall be machine engraved ¼-inch high (1 inch high for enclosure title) black capital letters on a 1/8-inch thick plastic black tag with white letters mechanically attached to the enclosure. Nameplates shall not be engraved by hand. Provide nameplates as indicated on the Instrumentation drawings.

2. Legend plates shall be metal with black lettering mechanically attached to the control panel.

3. Provide nameplates for equipment and components mounted on the interior of the panel. Nameplates shall be mounted adjacent to, but not on the equipment. Nameplates shall not be hand written.

2.11 INTRINSICALLY SAFE BARRIER - LEVEL TRANSMITTERS

A. Provide Intrinsically Safe Barrier for connection to level transmitter circuit as indicated on the Instrumentation Drawings. Barrier shall be compatible with the level transmitters specified in Section 13422 VFD Station Instrumentation.

B. Intrinsically safe barrier for analog circuits such as the level transmitter circuit shall be snap-on type, suitable for DIN rail mounting and grounding. Relays shall be suitable for use with intrinsically safe circuits installed in Class I, Division 1, Group D Hazardous Locations, and shall be FM, UL and CSA approved for use in such circuits. Barrier shall loop powered for energizing the two-wire, 4-20 mA level transmitter located in the hazardous area and connected loads. Barriers shall be approved by the manufacturer of the pressure transmitter for interfacing with the specific transmitter supplied.

C. Barriers shall be provided in the analog circuit to provide an intrinsically safe circuit suitable for installation in a Class I, Division 1, Group D Hazardous Location.

D. Install barriers in accordance with UL-698A and NEC Article 504.

E. Intrinsically Safe Barriers shall be as manufactured by RSTAHL, Model 9002.

2.12 INTRINSICALLY SAFE ISOLATORS – FLOAT SWITCH

A. Provide intrinsically safe isolators in the control panel for interfacing with the float switch circuits as indicated on the Instrumentation drawings. Intrinsically safe isolators used with dry contact inputs shall be provided with an energy barrier limiting the available voltage and current for the circuit installed within the confines of the Hazardous Location. The isolators shall interface with field equipment installed in Hazardous Locations that are not provided with explosion-proof enclosures, such as float switches. Isolators shall be suitable for intrinsically safe circuits installed in Class I, Division 1, Group D, Hazardous Locations, and shall be approved by Factory Mutual and Canadian Standards Association for installation in such locations.

B. Isolators shall be solid state design, and shall be suitable for operation on 24 VDC power, provided with two, double throw contacts rated at 2.0 amperes at 120 VAC.

C. Install barriers in accordance with UL-698A and NEC Article 504.

D. Isolators shall be MTL, Inc. Model 5514 series.

2.13 CONTROL AND TIMING RELAYS

A. The CSI shall furnish and install all controls required to be installed in control panels and enclosures required to be furnished by the CSI. Controls provided for installation in control panels and enclosures specified to be provided by manufacturers and suppliers other than the CSI do are not required to be furnished by the CSI.

B. Provide relays with sufficient poles such that all required functions are provided. No more than two wires shall be terminated on each terminal of the relay socket.

C. Contact ratings shall be minimum 10 amperes at 24 VDC or 240 VAC. Contact material shall be silver cadmium oxide. Relays shall be provided with LED indicator to illuminate when the coil is energized. Timing relays shall be solid state with external adjustable time settings within adjustable time ranges. Timing relay shall have four selectable modes: On-delay, off-delay, one-shot and repeat cycle with adjustable on and off time periods.

D. Provide relays with 120 VAC or 24 VDC powered coils as required to meet functions indicated in Project Drawings. The 120 VAC coil relays shall be blade type plugs and the 24 VDC relay coils shall have pin type plugs. Relays shall be UL recognized devices as manufactured by IDEC, RH series.

2.14 OPERATOR INTERFACE TERMINAL (OIT)

A. An operator interface terminal shall be provided to communicate locally with the PLC, allow changing of control and alarm set points, display equipment status, annunciate alarms, change control modes, and other interfacing required for the monitoring and control of the pump station. The OIT shall be provided with the following:

1. A 10" (10.5 diagonal display) touch activated TFT (active display) with 640W x 480H minimum color display resolution

2. Mounted on the control panel with no more than 4.5" depth and shall operate from 18 to 32 VDC, or 24 VDC nominal.

3. OIT shall have NEMA 12 rating

4. The unit shall include all cables, interfaces, and associated hardware and software to allow two way communications with the PLC.

   a. OIT shall be compatible with and support PLC using EtherNet communications.

   b. The OIT software for developing graphic display screens and data

display screens shall be the manufacturer's standard package.

c. Operator Interface Terminal's display screens shall be as specified in Section 13349 VFD Control System Description.

d. OIT shall be PanelView Compact 2711PC-T10C4D8 as manufactured by Rockwell Allen Bradley no substitutions.

2.15 PROGRAMMABLE LOGIC CONTROLLER (PLC) SYSTEM

A. General:

1. The PLC processor and related equipment shall be the product of one manufacturer and components shall be completely compatible.

2. The processor shall have downward capability, whereby all new module designs are capable of being interchanged with similar modules to reduce obsolescence.

3. The PLC processor shall be designed and tested to operate in industrial, high electrical noise environments. The system shall be provided with RFI protected shields and barriers to prevent interference with other electrical systems.

B. PLC Processor:

1. The PLCs shall be microprocessor-based, standalone device. It shall be designed for industrial environments, capable of a mix of relay logic, timing, counting, computation, and shall include a library of preprogrammed subroutines. The PLC processors shall include a time of day real-time clock and calendar.

2. The PLC processor memory shall be nonvolatile (flash) memory.

3. The PLC processor shall be provided with 1784 CompactFlash Card to back up processor memory. The CompactFlash Card module shall provide a minimum of 64 MB storage space to back up user program and tag data.

4. The PLC processor shall be capable of interfacing with the type of input/output (I/O) modules shown on the Project Drawings and specified herein. The PLC processor shall be capable of communicating with up to 16 1769 I/O modules.

5. The unit shall be provided with a key selector switch with

Run/Remote/Program operating modes.

6. The PLC shall have relay logic with contacts, a mix of timers, counters, algebraic equations and manipulations consisting of addition, subtraction, multiplication, division, automatic scaling and un-scaling routines, and BCD conversion routines.

   a. Logic Control: The processor shall perform the same functions as a conventional logic system including relays, on delay timers, off delay timers, counters, and drum sequencers.

   b. Compare Function: The processor shall perform the compare functions that compare two integers or floating point numbers for less than, equal to, greater than, and not equal to. The programmed function shall energize a relay when true and de-energize it when false.

   c. Move Function: The move function shall move an integer or floating point value from one memory location to another memory location when an internal permissive is enabled.

   d. Math Function: The processor shall perform addition, subtraction, multiplication, and division or signed integer floating point numbers.

   e. Square Root Function: The processor shall take the square root of a positive integer.

   f. Binary to BCD Function: The processor shall convert a positive binary number to a positive four-digit BCD coded number.

   g. PID Control: The processor shall perform proportional, integral and derivative control of a process with adjustable ranges for: Proportional Gain, Reset Time, and Derivative Time.

   h. PLC System Alarm (PLC Fault): The PLC processor shall monitor the internal operation of the PLC system for failures. If a failure is detected, the system shall shut down, energize or de-energize a failure relay, and freeze all inputs and outputs in their last states until the error is cleared. As a minimum, the following failures shall cause the system to shut down: Memory Failure, Memory Parity Error, I/O Cycle Failure, Operating System Error, or Watchdog Timer Time-out. In the event of a PLC fault, the analog output shall become zero. The PLC shall only resume normal operation when the fault condition has been cleared.

7. The PLC shall be provided with the following features:

   a. The PLC processor shall be capable of retaining last state in the event of a power outage.

   b. The PLC processor shall be provided with the following communication ports as a minimum:

      1) EtherNet port – EtherNet/IP port 10/100 BASE-T
      2) RS-232 port – RS232 port fully isolated 38.4 Kbps max

   c. Peripheral devices such as programming panels or host computers shall be connected directly to the PLC processor through the RS232 communications port, the EtherNet port or through a 1761-NET-AIC module.

8. The PLCs shall be provided with a user memory of 750 KB and shall be of the following manufacturer:

   a. Rockwell Automation/Allen-Bradley CompactLogix, Ethernet, part number 1769-L32E, no substitutions.

9. As a minimum, the actual programming memory shall be sufficient to accommodate the quantity and type of I/O, including spare and future I/O, as indicated in Section 13346, VFD Station Input/Output Point List, and to execute the required functions described in Section 13349, VFD Station Control System Description.

C. Input/Output (I/O) Modules:

1. General:

   a. The input/output (I/O) modules shall be tongue-and-grove backplane type and shall be compatible with the PLC processor I/O structure. Each module shall be provided with a removable wiring terminal block to connect panel wiring to the module.

   b. The Instrumentation drawings do not necessarily indicate all required I/O modules, both quantity and type. Provide I/O modules of sufficient quantity and type to accommodate the I/O listed in Section 13346, VFD Station Input/Output Point List, including active, future and 25% spare I/O. The modules shall be UL-508 Listed.

2. Discrete Input (DI) Modules:

   a. Discrete input (DI) modules shall be 115 VAC, 16 point input modules suitable for use with 115 VAC, 60 Hz input devices such as selector switches, push buttons, and motor starter contacts. The modules shall have 1500 VAC Opto-electrical isolation, LED status indication, and input noise filtering.

3. Discrete Output (DO) Modules:

   a. Discrete output modules shall be 115 VAC, 16 point output modules suitable for use with 115 VAC output devices such as motor starter coils and indicating lights. The module shall have an output rating of 12 amperes maximum and 2 amperes per output, and have 1500 VAC Opto-electrical isolation. The modules shall be configured to either assume last state or reset in the event of a module fault.

   b. Each discrete output shall be provided with an interposing relay interface for active, future and spare points. Control relays for all active, future and spare points shall be connected and wired to field terminal strips.

4. Analog Input (AI) Modules:

   a. Analog input (AI) modules shall convert 4 differential or single-ended analog signals to proportional sixteen-bit binary values. The modules shall accept 4-20 mA or 1-5 V DC signals from devices such as transmitters, converters and analyzers. The modules shall be suitable for either 2- or 4-wire systems. The input power for each signal shall be derived from a DC power supply external to the module. The accuracy of the module shall be +/- 0.2% of full scale at 25degrees C.

5. Analog Output (AO) modules:

   a. Analog output modules shall convert 14-bit binary values to 4 single-ended analog output signals. The modules shall output a 4-20 mA DC signal to devices such as variable frequency drives, modulating valves, and SCR heating. The analog output shall be capable of driving a 0-600 ohm load without adjustment. The system power shall be provided through the I/O backplane.

D. Power Supplies:

1. A power supply shall be provided to provide power to the PLC processor and local I/O modules. Additional power supplies shall be provided to power remotely located I/O modules.

2. Power supplies shall be modular type with a minimum output current of 4 amps. Power supplies shall operate on a 120 VAC, 1 phase power source.

3. The power supplies shall be sized by the manufacture's to provide sufficient backplane current to power the entire I/O module train (eight (8) modules each side of power supply). The power supplies shall be provided with a minimum of 25% spare capacity in addition to the total calculated backplane current for existing and future modules.

4. Power supplies shall be provided with input fusing, surge protection and shall provide isolation from the incoming source. The power supply shall be provided with integral status indicators.

E. Miscellaneous:

1. Provide special cabling, connectors, modules and appurtenances as required for proper connection and operation of the PLC system.

2.16 ETHERNET SWITCH

A. Provide Industrial Ethernet Switch(s) with a minimum of five ports for allowing communications between the Programmable Logic Controller (PLC) Operator Interface Terminal (OIT), and the VFD. The Industrial Ethernet Switch shall be an unmanaged fast ETHERNET din-rail switch compliant to IEEE 802.3 and ISO/IEC 8802/3 for extended environmental conditions.

B. Ethernet Switch shall have the following features.

1. Minimum Five 10/100 base TX ports
2. Twisted Pair cable, RJ45 sockets, auto-crossing, auto-negotiation, auto-polarity.
3. Distance: Twisted Pair 0-100 M
4. Operating Voltage 9.6 to 32 VDC
5. Diagnostic LED's: Power, link status, data and data rate
6. Accessories: Universal Ac power supply Model AC24VT

C. Industrial Ethernet Switch shall be Hirschmann Model Spider 5TX.

2.17 PROXIMITY SWITCH

A. Provide an inductive proximity switch to be mounted on each pump check valve to monitor the movement of the check valve arm for determination of flow from the pump through the check valve.

B. The proximity switch shall have the following features:

1. Construction: Nickel plated brass 12 mm diameter IP-67 (NEMA 4)
2. Nominal Sensing distance 4 mm
3. Integral cable
4. Two wire operation 20 -120 VAC normally open output.
5. LED indicator 360 Degree visibility

C. Proximity Switch shall be Allen Bradley model 872C.

2.18 FLOAT SWITCH

A. Float switches shall be narrow angle control duty with integral cable and weight.

B. Conery Manufacturing Model 2900-B1-S1-C1.

2.19 SPARE PARTS

A. Provide the following spare parts related to products in this section:

1. One of each type of power supply, including PLC power supply

2. Two of each type of I/O cards provided on the project.

3. One PLC processor.

4. Two of each type of intrinsically safe barrier relays provided on the project.

5. One power surge protector (TVSS).

6. One analog circuit surge protector.

7. Two analog current isolators, if used.

8. One digital display of each type used.

9. One box each type of fuses used – minimum 3 each fuse of each type.

10. Five LED of each color used for the pilot lights.

11. One control relay and one timing-relay of each type used.

12. Two proximity switches.

B. Spare parts shall be provided in the manufacturer's standard packaging, and shall be clearly labeled with the following information:

1. Component type

2. Project name and number

3. Specification section

PART 3 – EXECUTION

3.01 INSTALLATION

A. Install the PLC, I/O modules and panel devices in the control panel per manufacturer's recommendations. Terminate wires from all I/O points to the terminal blocks within the control panel.

B. Equipment Mounting: Provide six inch minimum clearance between conduit and tubing entrances and the closest wiring trough or terminal strip. All equipment mounted within the enclosure shall be easily accessible for servicing.

C. Conduit Penetration: Where conduits will be entering the bottom of the enclosure, a suitable opening shall be cleanly punched in the bottom. Holes drilled, cut with a saw, torch, etc., in the field, will not be acceptable. Conduit entrances shall be towards the back of the enclosure to provide a shelf area on the bottom of the enclosure. Conduit nuts with sealing rubber gasket shall be used on all conduits entering boxes and cabinets.

D. Conduit Penetrations for Intrinsically Safe Circuits: Where conduits enter the enclosure and are for intrinsically safe circuits; space shall be provided to ensure safe circuits and non-safe circuits are separated as required by UL-698A and NEC Article 504.

3.02 CONTROL PANEL FABRICATION

A. All components, equipment, wiring, controls and appurtenances indicated and specified to be installed in the control panel shall be installed by the CSI.

B. Door mounted controls and equipment shall be mounted such that they are easily

accessible, with components mounted a minimum of 30" above finished floor elevation and a maximum of 72" above finished floor elevation.

C. Intrinsically safe barriers and circuit wiring shall be physically separated from all other wiring and components in accordance with the NEC and UL-698A. Intrinsically safe components and circuits shall be grouped together in one location within the panel.

D. For control panels with intrinsically safe circuits extending to hazardous areas, the control panel shall be fabricated to UL-508 Standards, and be UL-698A listed with serialized label. All other control panels shall be UL-508A Listed.

3.03 PUMP CONTROL SYSTEM TESTING

Testing shall be as detailed in Specification Section 13012.

END OF SECTION

This page intentionally left blank.

SECTION 13346

VFD STATION INPUT/OUTPUT POINT LIST

PART 1 - GENERAL

1.01 SCOPE

A. These specifications are intended to be used for wastewater pump stations with Variable Frequency Drive (VFD) controlled motors in the City of Suffolk, Virginia.

B. This section describes the input/output (I/O) point list for the Programmable Logic Controller (PLC) to be installed for monitoring and control of the pump station, the VFD's and associated equipment. The I/O list is included at the end of this section.

C. The I/O list includes interface points between the PLC and the pump station controls housed in the Pump Control Panel (PCP), between the PLC, the field equipment and instrumentation, and between the PLC and the variable frequency drives for Pump 1 and Pump 2. The City's SCADA system will allow monitoring of status and alarm conditions at the pump station.

PART 2 - PRODUCTS

2.01 GENERAL

A. The I/O point list contains the information necessary to configure the I/O interface hardware and to indicate range conversion or signal functions associated with the PLC.

B. POINT NAME is an alphanumeric character string. For the point F-123, the following apply:

1. The letter (F) is the functional identification. In the example, the "F" represents flow. Refer to the instrumentation legend on the Instrumentation Drawings for function identification representation, or in the legend contained herein.

2. The three digit number (123) identifies the loop number or field device.

C. DESCRIPTION is an alphanumeric character string up to twenty-four positions in length. FUTURE indicates future points for which pre-wired I/O hardware shall be provided. SPARE indicates spare points for which pre-wired I/O hardware shall be provided. All future and spare I/O points shall be wired to field terminal

blocks and provided with output relays and fuses in the manner specified for active points.

D. SIGNAL TYPE shall be one of the following:

1. AI – designates an analog input (all are 4-20 mA)

2. DI – designates a digital input.

3. AO – designates an analog output (all are 4-20 mA)

4. DO – designates a momentary, maintained or latched digital output.

E. DATA FIELD 1 and DATA FIELD 2 describe the function or signal characteristics. These are further defined under each signal type.

F. RELAY is used only for digital outputs to indicate the type of control relay:

1. MO designates momentary.

2. MA designates electrical latching.

3. LA designates mechanical latching.

G. ALARM is used only for digital inputs to distinguish between status inputs, and alarm inputs.

1. A designates Alarm.

2. No designation indicates a status point only.

2.02 PLC ANALOG INPUT

A. DATA FIELD 1 is the electrical input signal range and units.

B. DATA FIELD 2 is the process parameter range and engineering unit.

2.03 PLC DIGITAL INPUT

A. DATA FIELD 1 is the condition that exists when a field contact is open.

B. DATA FIELD 2 is the condition that exists when a field contact is closed.

2.04 PLC ANALOG OUTPUT

A. DATA FIELD 1 is the electrical output signal and units.

B. DATA FIELD 2 is the range of the controlled variable and engineering units.

2.05 PLC CONTROL DIGITAL OUTPUT

A. Control digital outputs can be momentary, maintained or latched.

B. DATA FIELD 1 is the contact closed function.

C. DATA FIELD 2 is the contact open function.

PART 3 - EXECUTION

3.01 POINT DATA FIELDS AND I/O POINTS

A. I/O point data fields shall be subject to review and modification by the Department during the shop drawing review phase. All changes directed by the Department shall be incorporated completely into the entire system at no increase in Project price subject to the following limitations:

1. The total number of modifications shall be limited to 20% of the total number of I/O points.

2. All changes to each unique I/O point shall count as one modification. For example, modifying the description, range, or engineering units on an analog input shall count as one modification.

3. Analog input alarm limit definition shall not be counted as a modification.

B. I/O points shall be subject to review and modification by the Department during the shop drawing review phase. Points may be changed from SPARE to ACTIVE, with corresponding changes to the point data fields, with no increase in Project price, subject to the following limitations:

1. No more than 20 points may be changed from SPARE to ACTIVE points.

2. Points that are changed from SPARE to ACTIVE shall be the same type (i.e., changing a spare AI to an active AI).

3.02 INSTRUMENTATION NOMENCLATURE

A. Refer to the INSTRUMENTATION IDENTIFICATION SCHEDULE on the following page for use in referencing point and tag numbers.

INSTRUMENT IDENTIFICATION SCHEDULE

FIRST LETTER			SUCCEEDING LETTER		
	VARIABLE	**MODIFIER**	**PASSIVE FUNCTION**	**OUTPUT FUNCTION**	**MODIFIER**
A	Analysis		Alarm		Automatic
B	Breaker		User's Choice	Close or Stop	Bypass
C	Communications			Control	
D	Density	Differential		Open or Start	
E	Voltage (EMF)		Primary Element	Sensor	
F	Flow Rate	Ratio	Fail	Fail	Fail
G	Gauging		Glass		Local/Man./Hand
H	Hand				High or Open
I	Current		Indicate		Intermediate
J	Power	Scan			
K	Time	Time Rate		Control Station	
L	Level		Light		Low or Close
M	Motor	Momentary		Motor	Middle
N	User's Choice		Input	Forward	On or Operate
O				Off	Overload
P	Pressure	Pneumatic	Point (Test)	Position	
Q	Quantity of Event	Totalize		Emergency/Abnormal	
R	Radioactivity		Record or Print	Remote	Run
S	Speed or Frequency	Sum	Switch	Switch	Stop
T	Temperature			Transmit	
U	Multivariable		Multifunction	Multifunction	Multifunction
V	Variable or Viscosity			Valve or Damper	VFD/Valve
W	Weight or Force		Well		
X	Mod. Light or Valve		Unclassified	Unclassified	Unclassified
Y	Interlock			Relay or Compute	Reverse
Z	Position			Drive or Actuator	

3.03 PLC INPUT /OUTPUT POINT LIST

A. The Input/Output List reflects Pumping Station I/O requirements. I/O and memory point assignments shall be as listed herein and on the drawings. The I/O list contained herein shall be used to identify actual quantities of the various types of I/O cards required for the project.

TAG Name	Description	Card Slot	Point	Type	Data Field 1	Data Field 2	Remarks
	WASTEWATER PUMPING STATION						
					OFF STATE	ON STATE	
	DISCRETE INPUT						
SS-2A	PUMP 1 IN HAND MODE	1	0	DI		HAND	FROM PCP PUMP 1 H-O-A
SS-2B	PUMP 1 IN AUTO MODE	1	1	DI		AUTO	FROM PCP PUMP 1 H-O-A
TSH-101	PUMP 1 MOTOR WINDING HIGH TEMPERATURE	1	2	DI	NORMAL	ALARM	FROM PCP MOTOR CONNECTION
SFR-101	PUMP 1 SEAL FAIL	1	3	DI	NORMAL	SEAL FAIL	FROM SEAL MONITOR RELAY
ZSX-101	PUMP 1 PUMP CHECK VALVE STATUS	1	4	DI	CLOSED	OPEN	FROM CHECK VALVE PLC INPUT
LPB-1	PUMP 1 PUMP FAIL RESET	1	5	DI		RESET	FROM PCP LPB-1
MIR-101A	PUMP 1 VFD RUNNING	1	6	DI	OFF	RUNNING	FROM PUMP 1 VFD
MIF-101A	PUMP 1 VFD FAULT	1	7	DI	NORMAL	ALARM	FROM PUMP 1 VFD
	SPARE	1	8				
	SPARE	1	9				
SS-1	PUMP 1 REMOTE POSITION	1	10	DI	LOCAL	REMOTE	FROM PUMP 1 STARTER SWITCH
SS-1A	LEAD LAG PUMP SELECTION 1-2	1	11	DI	ALT	1-2	FROM PCP SS-1
SS-1B	LEAD LAG PUMP SELECTION 2-1	1	12	DI	ALT	2-1	FROM PCP SS-1
FS-1 (CR-DW)	DRY WELL LEVEL HIGH	1	13	DI	NORMAL	ALARM	FROM DRY WELL FLOAT
FS-2 (CR-AL)	FLOAT MODE STOP (LEVEL LOW)	1	14	DI	NORMAL	ALARM	FROM LOW WET WELL FLOAT
FS-3 (CR-AH)	FLOAT MODE START (HIGH LEVEL)	1	15	DI	NORMAL	ALARM	FROM HIGH WET WELL FLOAT
SS-3A	PUMP 2 IN HAND MODE	2	0	DI		HAND	FROM PCP PUMP 2 H-O-A
SS-3B	PUMP 2 IN AUTO MODE	2	1	DI		AUTO	FROM PCP PUMP 2 H-O-A
TSH-201	PUMP 2 MOTOR WINDING HIGH TEMPERATURE	2	2	DI	NORMAL	ALARM	FROM PCP MOTOR CONNECTION
SFR-201	PUMP 2 SEAL FAIL	2	3	DI	NORMAL	SEAL FAIL	FROM SEAL MONITOR RELAY
ZSX-201	PUMP 2 PUMP CHECK VALVE STATUS	2	4	DI	CLOSED	OPEN	FROM CHECK VALVE PLC INPUT
LPB-2	PUMP 2 PUMP FAIL RESET	2	5	DI		RESET	FROM PCP LPB-2
MIR-101A	PUMP 2 VFD RUNNING	2	6	DI	OFF	RUNNING	FROM PUMP 2 VFD
MIF-101A	PUMP 2 VFD FAULT	2	7	DI	NORMAL	ALARM	FROM PUMP 2 VFD

TAG Name	Description	Card Slot	Point	Type	Data Field 1	Data Field 2	Remarks
	SPARE	2	8				
	SPARE	2	9				
SS-2	PUMP 2 REMOTE POSITION	2	10	DI	LOCAL	REMOTE	FROM PUMP 2 STARTER SWITCH
GR-1	GENERATOR RUN	2	11	DI	OFF	RUNNING	FROM GENERATOR
GF-1	GENERATOR COMMON FAULT	2	12	DI	NORMAL	FAIL	FROM GENERATOR
CR-PFR	LOSS OF CONTROL POWER	2	13	DI	POWER FAIL	POWER ON	FROM PCP CONTROL POWER RELAY
UV-101	LOSS OF STATIONPOWER	2	14	DI	POWER FAIL	POWER ON	FROM TRANSFER SWITCH 3 PHASE POWER LOSS
XFR-101	TRANSFER SWITCH POSITION	2	15	DI	COMMERCIAL	EMERGENCY	FROM TRANSFER SWITCH
	SPARE	3	0	DI			
	SPARE	3	1	DI			
	SPARE	3	2	DI			
	SPARE	3	3	DI			
	SPARE	3	4	DI			
	SPARE	3	5	DI			
	SPARE	3	6	DI			
	SPARE	3	7	DI			
	SPARE	3	8	DI			
	SPARE	3	9	DI			
	SPARE	3	10	DI			
	SPARE	3	11	DI			
	SPARE	3	12	DI			
	SPARE	3	13	DI			
	SPARE	3	14	DI			
	SPARE	3	15	DI			
	DISCRETE OUTPUT						
MC-101C	PUMP 1 PUMP REQUIRED	4	0	DO	OFF	REQUIRED	TO PCP (REQUIRED PL-8) & CR-1
MI-101A	PUMP 1 RUNNING	4	1	DO	OFF	RUNNING	TO PCP (RUNNING PL-9) & TO SCADA
MF-101A	PUMP 1 FAULT/LOCKOUT	4	2	DO	OFF	FAULT	TO PCP (FAILED LPB-1) & ALARM TO SCADA

TAG Name	Description	Card Slot	Point	Type	Data Field 1	Data Field 2	Remarks
TSH-101	PUMP 1 OVER TEMPERATURE	4	3	DO	OFF	OVER TEMP	TO PCP (OVER TEMP PL-5)
SFM-1	PUMP 1 SEAL FAIL	4	4	DO	OFF	SEAL FAIL	TO PCP (SEAL FAIL PL-4)
MF-101B	PUMP 1 ALARM	4	5	DO	OFF	ALARM	FROM PCP ALARM TO SCADA
NF-110	PLC FAIL	4	6	DO	NORMAL	ALARM	FROM PCP ALARM TO SCADA
CF-111	COMMUNICATIONS FAIL	4	7	DO	NORMAL	ALARM	FROM PCP ALARM TO SCADA
UV-110	POWER FAIL	4	8	DO	NORMAL	ALARM	FROM PCP ALARM TO SCADA
LSH-101	FLOAT MODE START	4	9	DO	NORMAL	ALARM	FROM PCP ALARM TO SCADA
LSL-101	FLOAT MODE STOP	4	10	DO	NORMAL	ALARM	FROM PCP ALARM TO SCADA
	SPARE	4	11	DO			
	SPARE	4	12	DO			
	SPARE	4	13	DO			
	SPARE	4	14	DO			
	SPARE	4	15	DO			
MC-201C	PUMP 2 PUMP REQUIRED	5	0	DO	OFF	REQUIRED	TO PCP (REQUIRED PL-10) & CR-2
MI-201A	PUMP 2 RUNNING	5	1	DO	OFF	RUNNING	TO PCP (RUNNING PL-11) & TO SCADA
MF-201A	PUMP 2 FAULT/LOCKOUT	5	2	DO	OFF	FAULT	TO PCP (FAILED LPB-2) & ALARM TO SCADA
TSH-201	PUMP 2 OVER TEMPERATURE	5	3	DO	OFF	OVER TEMP	TO PCP (OVER TEMP PL-7)
SFM-2	PUMP 2 SEAL FAIL	5	4	DO	OFF	SEAL FAIL	TO PCP (SEAL FAIL PL-6)
MF-201B	PUMP 2 ALARM	5	5	DO	OFF	ALARM	FROM PCP ALARM TO SCADA
GR-1	GENERATOR RUN	5	6	DO	NORMAL	ALARM	ALARM TO SCADA
GF-1	GENERATOR FAIL	5	7	DO	NORMAL	ALARM	ALARM TO SCADA
XFR-101	ATS EMERGENCY POSITION	5	8	DO	NORMAL	ALARM	ALARM TO SCADA
	SPARE	5	9	DO			
	SPARE	5	10	DO			
	SPARE	5	11	DO			
	SPARE	5	12	DO			
	SPARE	5	13	D0			
	SPARE	5	14	DO			
	SPARE	5	15	DO			

TAG Name	Description	Card Slot	Point	Type	Data Field 1	Data Field 2	Remarks
	ANALOG INPUT						
LI-100	WET WELL LEVEL	6	0	AI	4-20 mA	0-35.6 FEET	FROM LE/LT-100
PI-200	FORCE MAIN PRESSURE	6	1	AI	4-20 mA	0-100 PSI	FROM PE/PT-200
PUMP-1SA	PUMP 1 SPEED FEEDBACK	6	2	AI	4-20mA	0-60Hz	FROM PUMP 1 VFD
PUMP-2SA	PUMP 2 SPEED FEEDBACK	6	3	AI	4-20mA	0-60Hz	FROM PUMP 2 VFD
	SPARE	7	0	AI	4-20mA		
	SPARE	7	1	AI	4-20mA		
	SPARE	7	2	AI	4-20mA		
	SPARE	7	3	AI	4-20mA		
	ANALOG OUTPUT						
PUMP-1C	PUMP 1 LOAD CURRENT	8	0	AO	4-20 Ma	0-XXX	TO SCADA (VALUE TO BE DETERMINED)
PUMP-2C	PUMP 2 LOAD CURRENT	8	1	AO	4-20 Ma	0-XXX	TO SCADA (VALUE TO BE DETERMINED)
PUMP-1SA	PUMP 1 SPEED FEEDBACK	8	2	AO	4-20 Ma	0-60Hz	SPEED FEEDBACK TO SCADA
PUMP-2SA	PUMP 2 SPEED FEEDBACK	8	3	AO	4-20 Ma	0-60Hz	SPEED FEEDBACK TO SCADA
PUMP-1SB	PUMP 1 SPEED CONTROL	8	4	AO	4-20 Ma	0-60Hz	TO PUMP 1 VFD
PUMP-2SB	PUMP 2 SPEED CONTROL	8	5	AO	4-20 Ma	0-60Hz	TO PUMP 2 VFD
	SPARE	8	6	AO			
	SPARE	8	7	AO			

END OF SECTION

SECTION 13349

VFD STATION CONTROL SYSTEM DESCRIPTION

PART 1 - GENERAL

1.01 DESCRIPTION

A. These specifications are intended to be used for wastewater pump stations with Variable Frequency Drive (VFD) controlled motors in the City of Suffolk, Virginia.

B. This section includes the requirements for operation of the PLC and OIT for monitoring, and control of the pump station as well as interfacing with the Variable Frequency Drives and the City's SCADA system. All work specified herein shall be performed by the Department's designated representative for programming. This section is provided as a guideline to ensure that the Programmable Logic Controller and Operator Interface Terminal provided by the Control System Integrator are adequate to allow programming as specified herein.

1.02 ABBREVIATIONS

CSI	Control Systems Integrator
I/O	Input / Output
OIT	Operator Interface Terminal
PLC	Programmable Logic Controller
PCP	Pump Control Panel
UL	Underwriters Laboratory
UPS	Uninterruptible Power Supply
TVSS	Transient Voltage Surge Suppressor
EEPROM	Electrically Erasable Programmable Read Only Memory

1.03 QUALITY ASSURANCE

A. The CSI shall demonstrate to the Department, prior to beginning the work, that the CSI has qualified staff available to develop the required control system and documentation, and shall demonstrate that such staff has experience with working with the programming software being used on the Project.

1.04 SUBMITTALS

A. The CSI shall submit the name or names of the persons who will be responsible for coordinating with the Department's programming representative for the PLC and OIT.

PART 2 – PRODUCTS

Not Used

PART 3 – EXECUTION

3.01 GENERAL

A. The CSI shall utilize the control descriptions described herein, as well as the Instrumentation drawings, and the I/O list contained in Section 13346, VFD Station Input/Output Point List to develop drawings for the PLC, the OIT and connections to the SCADA System. The PLC, OIT and SCADA System programming will be by the Department's designated representative. The programs, working in conjunction with one another, shall constitute a comprehensive monitoring and control system for the pump station.

B. The control descriptions contained herein are intended to provide details for the operational modes of control, with emphasis on automatic control modes.

C. Abbreviations:

1. The following abbreviations with corresponding definitions are used in the control descriptions, and pertain directly to the OIT and PLC unless otherwise noted:

a. AUTO: Control mode selected at OIT whereby PLC logic functions control operation of equipment or system

b. MANUAL: Control mode selected at OIT whereby operator manual input controls operation of equipment or system

c. ICON: Symbol representing a piece of equipment, functions, or commands on a pictorial display on the OIT

d. LOCKOUT: A piece of operating equipment such as a pump or fan that is selected at the OIT for being locked out from an operating sequence. This allows the particular piece of equipment to be overlooked in the operating sequence so that its lack of operation does not cause an alarm to be generated.

e. PCP: Pump Control Panel

D. Alarms:

1. Provide a means via the OIT to acknowledge an alarm in the system. The alarm shall not cease until the alarm is acknowledged, the alarm condition

ceases, and the main reset pushbutton on the OIT has been depressed for reset.

2. A PLC hardware problem or fault shall constitute an alarm that shall be transmitted to the City's SCADA system.

3. Each alarm shall be provided with a timing function that can be set via the OIT alarm set point screen.

E. Operator Adjustments:

1. The PLC and OIT programs shall allow for the following:

a. Adjustment of alarm settings derived from analog signals from the OIT.

b. Time delay functions for each alarm point, with capability of adjusting timing functions from the OIT.

c. Acknowledgement and resetting of alarm signals via the OIT.

d. Time and date on each display screen

e. PLC fail signal output on the Menu Screen

f. Security levels and corresponding security access codes for PLC programs and for operator selections on OIT screens.

g. Alarm generation for any command for equipment operation that does not result in the equipment running.

h. Capability for selecting individual pieces of equipment for disabling at the OIT such that the equipment is not called to operate, and alarms associated with the equipment will not be generated.

i. Timing functions to delay re-starting of equipment when power is transferred from normal to standby, and on re-transfer of power. Timing functions shall be provided to stagger re-starting of the wastewater pumps Pump-1, and Pump-2. Timing functions shall also apply to re-transfer to normal power if equipment loads drop off line during re-transfer.

j. Alarms for loss of level transmitter signal.

k. Alarms for loss of EtherNet communications to VFD's to be

displayed on the OIT.

3.02 CONTROL DESCRIPTIONS – WASTEWATER PUMPS (PUMP-1, PUMP-2)

A. Manual and Automatic Pump Control

1. General

a. Pumps shall normally operate in an automatic mode with stop/start and speed control via the PLC. Pump Control Panel (PCP) will be provided with a Hand-Off-Auto selector switch for each pump and the VFD's will be provided with a "Local – Off – Remote" selector switch to select either local or remote control of the VFD and corresponding pump. The pumps will normally operate with the switch selected for Remote mode.

1) VFD Local Mode: Pump is started locally at the VFD. The VFD will also be provided with a door mounted keypad which will allow speed control selection, in % of maximum possible speed, when in the Local mode. Local mode by-passes the PLC control of the VFD and all permissive signals.

2) VFD Remote and PCP Auto Mode: Start/stop and speed control signals shall be transmitted from the PLC to the VFDs. In the Auto Mode (PCP) the pump shall be controlled from the PLC/OIT normal sequence of operation, pump may also be started by the redundant high level and low level float switches connected to the PCP. The VFD's associated with each pump will normally be selected for "Remote" mode at the VFD and Auto mode at the PCP.

3) VFD Remote and PCP Hand Mode: "Hand" mode at the PCP will by-pass the PLC normal sequence of operation. Pump will operate at minimum speed as set at the VFD and shall be adjustable upward by the operator through the OIT.

b. The pumps shall normally operate in an alternate pump configuration with VFD speed control based on a PID set point control loop programmed into the PLC using wet well level as the process variable.

2. Pump Control Modes – PLC and OIT

a. Three (3) control modes shall be selectable at the OIT for each

individual pump as follows:

1) Full Manual
2) Full Automatic
3) Automatic Start/Stop with Manual Speed Control

b. In Full Manual mode, the pump start/stop and speed control for the individual pump shall be manually selected at the OIT by the operator.

c. In the Full Automatic mode, the pumps shall operate based on the automatic control scheme described herein for Automatic Control for both start/stop and speed control.

d. In the Automatic Start/Stop with Manual Speed Control mode, the start/stop control shall be the same as described for the Full Automatic Control, with manual speed adjustment at the OIT.

3. Automatic Control - Pump Selection:

a. The OIT shall be provided with the capability to display the pump sequence assignment to be made in lead/lag through selector switch on PCP. The VFD shall be selected for "Remote" at the VFD, and the 1-2, ALT, 2-1 switch shall be selected for one of the pump assignments as described below.

b. The pump assignments shall be capable of being changed via the selector switch on PCP. Distinct selections for pump operation shall be provided on the selector switch on PCP as follows:

1) Fixed (1-2 or 2-1 pump selection).
2) Automatic Alternation (ALT)

c. When the Fixed mode is selected, the pump assignment (lead or lag) shall remain stationary until new assignments are made by an operator by placing the 1-2, ALT, 2-1, selector switch on PCP in a new position. Changing of the pumping assignments shall only take place when all pumps are stopped.

d. In the Automatic Alternation mode (ALT), the pump assignments (lead or lag) shall automatically alternate each time the lead pump starts and then stops, shifting sequentially such that the lead pump next becomes the lag pump, and the lag pump then becomes the lead pump

4. Automatic Control – Stop, Start and Speed Control:

a. There shall be at least Five (5) level settings used in the stop, start and speed control of the pumps. The elevations shall be indicated on the Drawings and included in the O&M Manual. The level settings are based on the level transducer signal input to the PLC, and are as follows, in order of ascending elevation:

1) Level sensor (transducer) 1 foot above bottom of wet well.
2) Low Water Level Alarm (Set Point) _____ Feet
3) Float Mode Stop Level (Float) _____ Feet
4) All Pumps Stop (Stop Set Point) _____Feet
5) Maintain Level _____Feet (PID Level Set Point) to be determined in the field and included in the O&M Manual.
6) Lead Pump Start (Start Lead Set Point) _____Feet
7) Lag Pump Start (Start Lag Set Point) _____Feet
8) Float Mode Start Level (Float) _____ Feet
9) High Water Level Alarm (Float) _____Feet

b. Each level setpoint shall be individually adjustable at the OIT by the operator. This operation shall be password protected.

c. On rising level, the pump selected for lead pump shall start at the Start level. The lead pump VFD speed shall ramp to a preset minimum speed (adjustable on the OIT). Once the lead pump VFD has reached the starting speed and the check valve opens (If the check valve does not open at minimum speed, the VFD will ramp in 1Hz increments until the valve opens), the VFD will then be controlled by a PID level control loop in the PLC, with the wet well level being the process variable in the loop, and the Maintain Level setting being the PID setpoint. The pump speed shall be varied based on the PID of the control loop. If the wet well level is above the setpoint, the speed will increase, and if the wet well level is below the set point, the speed will decrease based upon the PID loop. Pump minimum speed will be set according to field conditions and as directed by the Department.

d. When the wet well level rises to the lag pump start level, the pump selected for lag will start.

e. Once the lag pump starts, the lead and lag pump VFD's will ramp to their maximum speed (60Hz) and then will operate in tandem at the maximum.

f. On falling level, both pumps will continue to operate at their maximum speed and when the wet well level drops to the all

pumps stop level set point, all pumps shall ramp down to stop.

5. Automatic Fail Over:

   a. If a pump fails to start when required, or a fault occurs during operation, an alarm shall be generated and the next pump in the sequence shall start and take the place of the failed pump. The failed pump shall be locked out of operation until the alarm has been reset at the PCP/OIT, and the PLC shall not allow the pump to be started in the "Auto" mode while the alarm condition exists.

6. Pump Over Temperature:

   a. Upon sensing a pump over temperature condition in the pump, the control system shall cause the pump to stop operating, lock out the pump until reset and index to the next pump in the sequence. The pump over temperature light shall be illuminated and the OIT shall display pump over temperature for the affected pump until reset.

   b. A pump failure alarm shall be generated and sent to the SCADA system.

7. Pump Seal Failure:

   a. Upon sensing a pump seal fail condition the control system shall cause a seal failure light to be illuminated. The light shall remain illuminated until the condition is cleared. The condition shall not require the pump to stop operating.

8. Failure to Pump:

   a. A proximity switch shall be installed on the check valve to detect movement of the check valve swing arm. When a pump is required to operate and any time during the pump operation, if the check valve fails to open or remains closed for a preset time a Pump Flow Failure Alarm shall be displayed on the OIT for the affected pump until reset. Pump fail time shall be determined and set during start up. The condition shall not require the pump to stop operating.

9. Pump LOCKOUT:

   a. The capability shall be provided at the OIT to select a pump for LOCKOUT. When selected for LOCKOUT, the particular pump shall not be capable of being selected in the pump control, and shall not be available for operation via the PLC and OIT. The

LOCKEDOUT pump shall display LOCKEDOUT on the Pump Screen, and displayed as an alarm that the corresponding pump has been locked out by the OIT.

B. Wet Well Level and Force Main Pressure Signals

1. Displays:

a. The wet well level signal will be transmitted to the PLC and shall be displayed on the OIT and the digital level display; the signal will be a 4-20 mA signal proportional to the water level in the wet well.

b. The force main pressure signal will be transmitted to the PLC and shall be displayed on the OIT and the digital pressure display; the signal will be a 4-20 mA signal proportional to the force main pressure.

2. Signal Failure and Loss of Signal:

a. Should the PLC sense a level signal failure such as a reading outside of the boundary of the 4-20 mA signals, or a loss of a level signal, an alarm shall be generated, and transmitted to the OIT and SCADA System.

b. Upon the level in the wet well falling to the low wet well level alarm point, as indicated on the Instrumentation Drawings, then an alarm shall be generated in Panel PCP and transmitted to the SCADA System. The low wet well float switch shall be used for pump stop in the event the pumps do not stop on a normal falling level transmitter signal.

c. During the float switch backup mode the pumps will operate at full speed over the entire range of float switch control between the high level and the low level floats. The float switch backup mode shall operate between the high level float and the low level float until the analog level signal is restored and the backup mode is released/reset through the OIT. Should the high level alarm float be reached while the level transmitter is within its normal operating range, the PLC shall operate the pumps as if the level transmitter has failed and switch to the float switch back-up mode until reset. If both pumps are operating at full speed and the high level float is activated the PLC shall not switch the control to the float switch mode.

d. The OIT shall indicate when the station is operating in Float or

Level Modes.

C. Loss of Communication Signal and PLC Failure

1. The PLC will monitor the communication status to both VFD's. In the even communications are lost to either of both VFD's, an alarm shall be generated by the PLC, displayed on the OIT and this alarm shall be transmitted to the SCADA System as "PUMP FAIL" Alarm.

2. In the event of a PLC failure or fault, an alarm shall be generated and transmitted to the SCADA System as a "PLC FAIL". During a PLC failure or fault the VFD shall be operable from the VFD keypad and the LOCAL-OFF-REMOTE switch is in the local mode.

D. Station Alarms

1. Any alarm generated by the PLC or received as an input to the PLC shall be displayed on the OIT and/or transmitted to the SCADA System as summarized in Table-1.

Table 1 – STATION ALARMS

Alarm	OIT	SCADA	Remarks
PUMP 1 - OVER TEMPERATURE ALARM	YES	YES	PUMP 1 FAIL (SHUTDOWN)
PUMP 1 - SEAL FAIL ALARM	YES	YES	PUMP 1 FAULT (ALARM)
PUMP 1 - FLOW FAIL ALARM (PUMP 1 FAIL TO START)	YES	YES	PUMP 1 FAULT (ALARM)
PUMP 1 - VFD FAULT ALARM	YES	YES	PUMP 1 FAIL (SHUTDOWN)
PUMP 1 - NOT IN AUTO ALARM	YES	NO	
PUMP 1 - FAIL TO RUN ALARM	YES	YES	PUMP 1 FAIL (SHUTDOWN)
PUMP 1 - LOCKED OUT BY HMI SCREEN PUSHBUTTON	YES	YES	PUMP 1 FAIL (SHUTDOWN)
PUMP 2 – OVER TEMPERATURE ALARM	YES	YES	PUMP 2 FAIL (SHUTDOWN)
PUMP 2 - SEAL FAIL ALARM	YES	YES	PUMP 2 FAULT (ALARM)
PUMP 2 - FLOW FAIL ALARM (PUMP 2 FAIL TO START)	YES	YES	PUMP 2 FAULT (ALARM)
PUMP 2 - VFD FAULT ALARM	YES	YES	PUMP 2 FAIL (SHUTDOWN)
PUMP 2 - NOT IN AUTO ALARM	YES	NO	
PUMP 2 - FAIL TO RUN ALARM	YES	YES	PUMP 2 FAIL (SHUTDOWN)
PUMP 2 - LOCKED OUT BY HMI SCREEN PUSHBUTTON	YES	YES	PUMP 2 FAIL (SHUTDOWN)
FLOAT MODE START (From float switch via PLC)	YES	YES	
FLOAT MODE STOP (From float switch via PLC)	YES	YES	
WET WELL LEVEL SENSOR FAILURE	YES	NO	
ATS EMERGENCY POSITION	YES	YES	
GENERATOR FAULT ALARM	YES	YES	
DRY WELL HIGH LEVEL ALARM	YES	YES	
PLC FAIL	NO	YES	

END OF SECTION

This page intentionally left blank.

SECTION 13402

VFD STATION SCADA SYSTEM

PART 1 - GENERAL

1.01 DESCRIPTION

A. These specifications are intended to be used for wastewater pump stations with Variable Frequency Drive (VFD) controlled motors in the City of Suffolk, Virginia.

B. This section includes requirements for the furnishing, installation and testing of the SCADA system at the pump station. SCADA equipment and components shall be furnished by the CSI unless otherwise specified.

C. Monitoring of the pump station operation and equipment and alarm status shall be accomplished using hard wired I/O connected to the PCP, equipment, and other instrumentation.

1.02 SUBMITTALS

A. Shop drawings shall be submitted for all items in accordance with Section 01302 and as specified herein. Items for which shop drawings shall be submitted shall include, but not be limited to, the following:

1. Catalog data, mounting details, wiring connection diagrams, and manufacturer's installation instructions.

2. Operation and maintenance manuals.

PART 2 – PRODUCTS

2.01 SCADA UNIT

A. Telog RS-3330 with 30 channels.

B. 1xV cellular modem with antenna.

C. See Section instrumentation drawings for required SCADA system signals.

D. See Telog Termination Diagram provided as a SUPPLEMENT to this section.

2.02 SCADA UNIT POWER SUPPLY WITH BATTERY BACK-UP

A. Power supply for SCADA unit shall be provided.

B. Power supply shall convert 120VAC, 60Hz power to 12VDC power with sufficient voltage regulation and ripple control to assure that instruments being supplied are operating within their required tolerance.

C. Output over voltage and over current protective devices shall be inherent in power supplies to protect instruments from damage due to power supply failure and to protect the power supply from damage due to external failure.

D. Manufacturer and model: Telog AC12B4

2.03 SCADA UNIT ENCLOSURE

A. Provide single enclosure for SCADA unit, power supply, and battery.

B. Enclosure for interior installation shall have the following features:

1. Enclosure shall be thermoplastic NEMA 4X.
2. Hinge and 2-point latching

2.04 DOOR ENTRY MONITORING SYSTEM (DEMS)

A. Telog DEMS-RECP. Wall-mounted box with dongle key receptacle.

B. SENTROL Model 1085T door switch, normally open.

PART 3 – EXECUTION

3.01 INSTALLATION

A. Install as described herein, as shown on the Drawings, and in accordance with the manufacturer's requirements. Route conduit and wire I/O from PCP, equipment, and instrumentation to SCADA Unit in a neat and professional manner.

B. All wire connections to the Telog Unit shall be labeled to identify the incoming signal utilizing descriptive labeling, in English.

C. SCADA Unit, Power Supply, and Battery

1. Install in SCADA Unit enclosure. Route 120V power conduit and wire from local power panel.

2. Provide the ESN (electronic serial number) for the Telog modem at least fourteen (14) calendar days prior to testing of the SCADA system so that

the Department can have the cellular provider assign the cell account to the unit with a static IP address.

D. SCADA Unit Enclosure

1. Wall-mount in the inside of the pump station adjacent to PCP. Mount cellular antenna to the exterior of the enclosure by screwing onto a bulk head fitting on the top of the enclosure.

E. DEMS

1. Wall-mount DEMS-RECP in the inside of the pump station adjacent to the door. Mount door switch on main entry door.

3.02 TESTING

A. Test all device alarm points after all devices, machines and systems which are equipped to initiate alarms have been installed, tested and approved. Prior to testing data transmission described below, submit checklist documenting each signals and alarms have been successfully tested from their source to the Telog Unit for the 30 I/Os of the Telog (if the signal is not used or is a spare indicate this by 'N/A'. The checklist shall have a list of each Telog signal and the date, time, and person who tested each signal as correctly being received at the Telog (printed name and signed). Final verification of the Telog to ensure it is receiving signals via the cell phone system will not be tested until the checklist has been completed and signed off.

B. Provide a minimum of fourteen (14) calendar days notice before testing of the City's SCADA System. The Department will establish cellular communications with the SCADA Server and program the SCADA Unit.

C. After all signals and alarms have been successfully tested and fourteen (14) calendar days notice has been provided, test and confirm data transmission between the PCP, equipment, and instrumentation and the City's SCADA System. Correct any signals or alarms that are not interfacing correctly with Telog unit and assist Department as necessary to start up system.

D. Coordinate with the Department and Engineer to test all alarm signals, status signals, and analog signals connected to the SCADA System for presentation on the Department's display and alarm notification devices. Any alarms, status signals or analog signals that are not found to be operational shall be retested until satisfactory results are accomplished.

PART 4 – SUPPLEMENT

4.01 Telog Termination Diagram.

Notes:

1. SIGNALS 3 AND 4 ARE ONLY USED FOR STATIONS WITH VFD'S.
2. SIGNAL 11 IS ONLY USED FOR STATIONS WITH RAIN GAUGES.
3. SIGNALS 21 AND 22 ARE ONLY USED FOR STATIONS WITH PERMANENT EMERGENCY GENERATORS.
4. SIGNAL 24 IS ONLY USED FOR STATIONS WHEN PUMPS ARE LOCATED IN A DRY WELL.

Telog_IO_Wiring_346716.jpg, Rev 09/29/2014

END OF SECTION

SECTION 13422

VFD STATION INSTRUMENTATION

PART 1 - GENERAL

1.01 DESCRIPTION

A. These specifications are intended to be used for wastewater pump stations with Variable Frequency Drive (VFD) controlled motors in the City of Suffolk, Virginia.

B. This section includes requirements for field instrumentation to be installed throughout the pump station as well as control stations and controls for installation in control panels, and miscellaneous instruments and controls not specified elsewhere. All equipment and components shall be furnished by the CSI unless otherwise specified.

1.02 SUBMITTALS

A. Shop drawings shall be submitted in accordance with Section 01302 for all items specified herein. Items for which shop drawings shall be submitted shall include, but not be limited to, the following:

1. Wet Well level sensor/transmitters (level transducer) and Force Main pressure transmitter, including catalog data, mounting details, wiring connection diagrams, and manufacturer's installation instructions. Provide catalog data on the surge protection to be provided with the transmitters, as well as catalog data for the intrinsically safe barrier relay to be provided with the transmitter.

2. Provide certified factory calibration report for Force Main Pressure Transmitter assembly.

3. Catalog information on the following equipment and controls:

   a. Wet Well Level Sensor/transmitter
   b. Force Main Pressure Transmitter
   c. Wet Well Level Indicator
   d. Force Main Pressure Indicator

4. Provide operation and maintenance manuals for the following items:

   a. Wet Well Level transmitter
   b. Force Main Pressure transmitter
   c. Wet Well Level Indicator

d. Force Main Pressure Indicator

5. Field calibration reports shall be provided for the post installation calibration of the force main pressure transmitter, digital indicators and the level transmitter.

1.03 MANUFACTURER'S INSPECTION AND START-UP

A. The Contractor shall furnish and coordinate the services of all instrumentation manufacturers' qualified field representatives to supervise the installation, inspect the equipment after installation, and monitor the initial operation for a minimum of one eight (8) hour workday. The manufacturers' representatives shall supervise the final field calibration of the instruments.

1. Wet Well level transmitter, Force Main pressure transmitter and digital indicators combined.

PART 2 – PRODUCTS

2.01 WET WELL TRANSMITTER (SUBMERSIBLE)

A. The level transmitter shall be the submersible pressure sensing type constructed of a piezoresistive pressure cell fitted into a Type 316 stainless steel package with integral monolithic Kynar diaphragm with Type 316 stainless steel housing. The output shall be a 4-20 mA analog signal directly proportional to the level of water submerging the transducer. The level transmitter shall be loop powered two-wire and have integral built-in lightning protection as a standard product.

B. A suitable power supply for the level transmitter shall be supplied.

C. The transmitter level range shall be 0-15 psig (0-34.6 feet H2O). The transmitter shall be located in the wet well in a 6" PVC stilling well so as not to suffer damage from turbulence. Stilling well shall be attached to the wet well wall with Type 316L stainless steel bands and fasteners not less than 3 feet apart over the length of the stilling well. Level transmitter shall be furnished with a watertight vented Tefzel jacketed cable to support the transmitter without additional cabling. The transmitter shall comply with NEMA 6P and IP68 requirements for submersion up to 900 feet. The transmitter cable shall be continuous without splices from the transmitter to PCP terminal blocks. A conduit shall be supplied for the transducer once the cable exits the Hazardous Location. Provide length of cable as required to connect the transmitter to the PCP. Provide 1" conduit for transmitter cable between the wet well junction box and PCP.

D. An aneroid bellows shall be furnished with the transmitter for attaching to the vent tube for atmospheric pressure change compensation. Desiccant vent filters will not be allowed.

E. The transmitter and cable shall be suitable for installation in a Class I, Division 1, Group D, Hazardous (Classified) Location. An intrinsically safe barrier relay shall be provided to create an intrinsically safe circuit for the transducer. The barrier relay shall be compatible with the transmitter provided, and shall be approved by the transmitter manufacturer for use with the transmitter.

F. Level transmitter shall be Factory Mutual Certified type Birdcage BC001-01002AA/CT-FM intrinsically safe submersible liquid level transmitter, as manufactured by Blue Ribbon, Grand Island, NY or model 750 as manufactured by Esterline KPSI, Hampton, Virginia.

2.02 FORCE MAIN PRESSURE TRANSMITTER

A. The force main discharge pressure sensor shall be of 1” threaded tap mounted type, suitable for raw sewage at 0-2 percent solids. The sensor shall be designed to isolate pipe line media from integral instrumentation and shall be located as shown on the Project Drawings. The sensor shall be equipped with a minimum 4-inch diameter dual scale liquid filled Type 316 stainless steel housing pressure gauge and a non-indicating pressure transmitter. Pressure gauge and pressure transmitter shall be suitable for the pressure range specified. Pressure transmitter is to be wired to the control panel to display discharge pressure on the digital pressure indicator and through the PLC’s GUI and to the SCADA System transmitter. The pressure sensor assembly shall consist of a Type 316 stainless steel body with threaded end connections, flexible Viton^{tm} element acting upon a DC200 silicon fluid fill, transferring pressure to the transmitter/gauge assembly. Assembly shall include 1” bronze corporation stop, 1” Onyx annular ring, 1” Type 316 stainless steel ball valve, 1” female CamLok fitting, pressure gauge and pressure transmitter as shown in drawing at the end of this section or as detailed on the plans. Pressure sensor assembly with all components shall be fully assembled, filled, and calibrated at the factory. Submit certified factory calibration data for the pressure transmitter assembled components.

B. The pressure sensor shall be a 1” annular ring as manufactured by Onyx.

C. Pressure transmitter shall be Model 27 range 0-100 psig with surge protection and two wire 4-20 mA output as manufactured by KPSI.

D. Pressure gauge shall be 0-50 psig for lift stations and 0-100 psig for stations pumping into force mains; ½” bottom feed 4-½”, liquid-filled, Ashcroft.

2.03 DIGITAL INDICATORS

A. Wet Well Level and Force Main Pressure digital indicators shall be a high performance, easy to use, industrial grade microprocessor-based digital process meters. The indicator shall accept all standard process signals (4-20 mA, 1-5 V, & 0-10 V) and displays these signals in engineering units on a 4½ digit display. The indicator shall be equipped with an isolated 4-20 mA output signal option. The indicator shall be programmable to produce a 4-20 mA output for virtually any input. The 4-20 mA output signal may be powered either by an internal or an external power supply.

B. The digital indicators shall be NEMA 4X, IP65 front panel rated and the NEMA 4X, IP65 front panel does not restrict access to the setup buttons.

C. Digital Indicators shall be UL-508 Listed.

D. Digital Indicators shall be type PD690, as manufactured by Precision Digital Corporation.

2.04 LOOP ISOLATOR

A. Analog signal isolator shall provide optical isolation between input and output stages of the isolator. Isolation shall be 1500 Volts AC peak minimum (250 V AC or 354 V DC continuous). Input and output channels shall be galvanic isolated.

B. Analog signal isolator shall be signal channel input with signal or dual output as necessary.

C. Analog isolator shall be 24 Volt DC powered and be UL Listed.

D. Analog isolator shall be Acromag, AGM.

2.05 SPECIALTIES

A. Instrument Tags: Provide engraved Type 316L stainless steel instrument tags with Type 316L stainless steel attachment chains for field instrumentation. Where instrument is submerged, provide tag at convenient location along cable or cord where it is readily accessible.

2.06 SPARE PARTS

A. The following spare parts shall be provided for instrumentation equipment:

1. Submersible Level Transducer: Provide one spare submersible level transducer, with cable length same as the installed transducers.

2. One digital indicator to match device provided.

PART 3 - EXECUTION

3.01 INSTALLATION

A. Install all instrumentation in accordance with the manufacturer's recommendations and as shown on the Project Drawings and as specified herein.

3.02 TESTING

A. The CSI shall be responsible for testing all control panels, instrumentation and controls that were furnished by the CSI. The CSI and the Contractor shall calibrate, operate, adjust and test all controls and instrumentation to assure complete and satisfactory installation and performance. All necessary test equipment shall be provided by the Contractor. The Contractor shall make all necessary changes and adjustments to equipment, all at no added cost to the Department.

1. Test all device alarm points after all devices, machines and systems which are equipped to initiate alarms have been installed, tested and approved.

2. Provide documentation in writing that test equipment has a current calibration certificate not less than six months old at time of instrumentation commissioning. Calibration shall be by a testing laboratory that is traceable to the NIST.

END OF SECTION

This page intentionally left blank.

SECTION 16269

VFD STATION VARIABLE FREQUENCY DRIVES

PART 1 - GENERAL

1.01 NOTE

A. These specifications are intended to be used for wastewater pump stations with Variable Frequency Drive (VFD) controlled motors in the City of Suffolk, Virginia.

B. This specification covers performance, design and manufacture of 240 and 480 Volt Variable Frequency Drives (VFD), six pulse design to control the speed of a 3- phase, 240 or 480 Volt, squirrel cage induction motor (horsepower as shown on the Drawings).

1.02 SCOPE

A. Provide all labor, materials, equipment and incidentals required, and install, place in operation and field test variable frequency drives.

B. The variable frequency controller shall be a space vector sine-coded Pulse-Width Modulated (PWM) design suitable for variable torque application. All drives shall be supplied by one manufacturer. The VFD shall be manufactured within the United States of America to alleviate concerns of future serviceability and parts availability. Drive manufacturer's facilities are to be certified to the ISO-9001 Series of Quality Standards as well as ISO-14001 Environmental Standard. The entire drive cabinet shall be UL labeled for short circuit current rating of 65,000 amperes RMS symmetrical, minimum.

C. The VFD system enclosure shall have the maximum dimensions as shown on the Project Drawings, and shall fit in the space indicated on the Project Drawings.

1.03 QUALITY ASSURANCE

A. The entire VFD system assembly and testing shall be the responsibility of the CSI. The VFD assembly, including enclosure, contactors, thermal overload, controls and accessories, shall be furnished as a complete assembly and shall bear a UL label.

B. Codes: Provide equipment in full accordance with the latest applicable rules, regulations, and standards of:

1. Local Laws and Ordinances

2. State and Federal Laws

3. National Electrical Code (NEC)

4. NEMA ICS3.1 – Safety standards for Construction and Guide for Selection, Installation and Operation of Adjustable Speed Drives.

5. NEMA 205 – Enclosures for Electrical Equipment

6. Underwriters Laboratories (UL) 508A

7. American National Standards Institute (ANSI)

C. The complete drive system shall be UL listed.

1.04 SUBMITTALS

A. Submittals shall be in accordance with Section 01302.

B. Submittal information shall include, but not be limited to:

1. Equipment dimensions, including stub-up locations, shipping splits, and shipping weights.

2. Catalog cuts of major components, including circuit breakers, fuses and disconnect switches, enclosure, contactors, thermal overload, line and load side reactors, and VFD keypad used for operator interface. In addition, provide the following information:

a. Maximum rated input current of VFD.
b. Heat rejection data at full load.
c. Efficiency and power factor.
d. Circuit breaker and fuse ratings, interrupting capacities and time-current characteristic curves.

3. Recommended spare parts list.

4. Certification including:

a. Warranty
b. Efficiencies
c. Harmonic Distortion Analysis
d. Short circuit current rating

5. Complete wiring and arrangement diagrams indicating project specific power and control wiring indicating compliance with the Project Documents. Submittals shall include the following:

a. Three line diagram for power circuit.

b. Control wiring diagram indicating internal and external controls, and clearly labeled field wiring terminations.

6. Provide detailed drawings of the VFD equipment enclosure, including exterior and interior elevations of panel. Elevations shall include front panel layout with nameplates, disconnecting means, keypad and control interfaces. Interior elevations shall include layout of circuit protective devices and disconnecting means, variable frequency drive unit, contactors, control relays, line reactor, field terminal strips and conduit entry locations.

7. Provide details of nameplates, panel mounted control devices and device legend plates.

8. Provide manufacturer's standard installation instructions with shop drawings.

9. Provide project specific Operations and Maintenance (O&M) Manual in accordance with Section 01302. O&M Manual shall include a hard copy of the final parameters settings for the VFD.

1.05 WARRANTY

A. All equipment furnished under this section shall be warranted for parts and labor on site by the contractor for a period of one (1) year from date of acceptance by the Department and the equipment manufacturers for a period of five (5) years after acceptance by the Department.

PART 2 - PRODUCTS

2.01 MANUFACTURER

A. Manufacturer shall be as shown on the City's approved products list.

2.02 MATERIAL AND EQUIPMENT

A. Any modifications to a standard product required to meet this specification shall be performed only by the VFD manufacturer or a manufacturer's authorized service center.

B. The VFD system shall consist of a 6-pulse minimum converter section, output inverter, and control logic section. All components listed shall be integral to the VFD, factory wired and tested as a complete system.

C. The VFD panel shall include a main breaker. All breakers shall be interlocked with the enclosure door with through-the-door handle. Main circuit breaker to serve as main disconnect for the entire enclosure.

D. The VFD input circuit breaker shall be interlocked with the enclosure door with through-the-door handle to provide positive disconnect of incoming AC power. The breaker operator shall be capable of being locked in the open position. Provide an auxiliary contact with the input circuit breaker and disconnecting means. Contact shall enable the VFD control circuit when the VFD breaker is closed, and disable the control circuit when the VFD breaker is open.

E. The VFD shall have a line side isolation contactor to remove power from the drive while not in operation. The control features of the drive shall be kept in operation from an auxiliary power supply connected to the line side of the isolation contactor.

F. VFDs shall meet all requirements as outlined in the 1992 edition of IEEE 519 for each individual drive and total harmonic voltage and current distortion as indicated in this specification. The use of passive filters to meet these requirements is acceptable. As per Table 10.2 of IEEE 519-1992, individual or simultaneous operation of all of the VFD's shall not add more than 10% total harmonic voltage distortion while operating at full load and speed from the utility source. Maximum input voltage unbalance shall be 0.5% as defined in NEMA MG 1 Section 14.35.2.

As per Table 10.3 of IEEE 519-1992, maximum allowable total harmonic current demand distortion limits for each VFD operating at full load and speed shall not exceed 10% as calculated and measured at the point of common coupling.

The point of common coupling for all harmonic calculations and field measurements for both voltage and current distortion shall be defined as the utility transformer secondary.

The short circuit current at point of common coupling under utility operation is 65,000 Amperes.

A harmonic analysis, which includes all voltage and current harmonics up to the 49th shall be submitted by the VFD manufacturer or a manufacturer's authorized service center.

G. Harmonic compliance shall be verified with onsite field measurements of both the voltage and current harmonic distortion at the main service breaker load terminals with and without the VFDs operating. A recording type Fluke or equivalent harmonic analyzer displaying individual and total harmonic currents and voltages shall be utilized.

H. Provide filters and/or reactors as required to meet the requirements of IEEE 519.

I. VFD system shall maintain a 0.95 minimum true power factor throughout the entire speed range.

J. The VFD shall fit in the allocated space as shown on Project Drawings.

2.03 VARIABLE FREQUENCY DRIVES

A. Ratings

1. The drive system shall be 96% efficient at full load and full speed and minimum 95% efficient at 50% load and 80% speed. Losses to be utilized in drive system efficiency calculations shall include input harmonic filter and power factor correction if applicable, VFD converter and output filter if applicable. Auxiliary controls, such as internal VFD control boards, cooling fans or pumps, shall be included in all loss calculations.

2. Rated Input Power: 240 or 460 volts as applicable to the installation, 60 Hz, +10%, -10% (at rated load), 3- phase.

   a. Voltage Dip Ride-Through: VFD shall be capable of sustaining continued operation with a 15% dip in nominal line voltage. Output speed may decline only if current limit rating of VFD is exceeded.
   b. Power Loss Ride-Through: VFD shall be capable of a minimum 3 cycle power loss ride-through without fault activation.

3. RPM (as shown on the Drawings), Frequency 60 Hz.

4. Operating ambient Temperature Range without derating:

   a. IP0 / Open 0º C to 50º C (32º to 122º F)
   b. IP20 / UL Type 1 (NEMA 1) 0º C to 40º C (32º to 104º F)
   c. IP54 / UL Type 12 (NEMA 12) 0º C to 40º C (32º to 104º F)

5. Elevation: Up to 3300 feet (1000 meters) above MSL without derating.

6. Atmosphere: Non-condensing relative humidity to 95%.

7. AC Line Frequency Variation: +/-3 Hertz.

8. Power Unit Rating Basis; 110% rated current for one minute.

9. Provide NEMA 12 ventilated enclosure.

B. Construction

1. The controller shall produce an adjustable AC voltage/frequency output. It shall have an output voltage regulator to maintain correct output V/Hz ratio despite incoming voltage variations.

2. The controller shall have a continuous output current rating of 100% of motor nameplate current. Contractor shall field verify the nameplate current rating on the existing motors.

3. The VFD shall be supplied with a 6-pulse converter bridge with a 5% line reactor. VFD's utilizing IGBT active rectifiers are acceptable.

4. The inverter output shall be generated by IGBTs. Pulse Width Modulation strategy will be of the space vector type implemented to generate a sine-coded output voltage. The VFD shall not induce excessive power losses in the motor. The worst case RMS motor line current measured at rated speed, torque and voltage shall not exceed 1.05 times the rated RMS motor current for pure sine wave operation.

5. The controllers shall be suitable for use with any standard NEMA-B MG1 squirrel-cage induction motors having a 1.15 Service Factor squirrel-cage induction motors with nameplate data as shown on the plans. The drive can be located up to 150 feet from the motor without requiring special cabling or separate motor protection devices. If special cabling or separate motor protection devices are required, they shall be supplied by the VFD supplier at the VFD manufacturer's expense. At any time in the future, it shall be possible to substitute any standard motor (equivalent horsepower, voltage and RPM) in the field. Drives shall have software to limit the reflected wave due to long cable lengths to a maximum of 2.25 times the bus voltage or 1600V, whichever is less, up to cable lengths of 600ft (183m). Hardware designs also limit peak voltages on the motor.

6. The control logic section shall be fully digital and not require analog adjustment pots or fixed selector resistors. A power failure will not necessitate a reload of any drive parameter or configuration.

C. Basic Features

1. The door of each power unit shall include a keypad with a manual speed adjustment device, and controls and monitoring devices as indicated on the Contract Drawings.

2. The VFD shall include a customer selectable automatic restart feature. When enabled, the VFD shall automatically attempt to restart after a trip condition resulting from instantaneous over current, over voltage, out of saturation of overload. For safety, the drive shall shut down and require manual reset and restart if the automatic reset/restart function (programmable for up to 5 attempts) is not successful within a customer programmable time period. Auto-Restart shall be programmable to allow for individual fault selection.

3. A door-mounted membrane keypad with integral 3 line minimum LCD display, capable of controlling the VFD and setting drive parameters shall be furnished. The keypad shall include the following features:

   a. The digital display shall present all diagnostic message and parameter values in English engineering units when accessed, without the use of codes.

   b. The digital keypad shall allow the operator to enter exact numerical setting in English engineering units. A plain English user menu (rather than codes) shall be provided in software in nonvolatile memory as a guide to parameter setting and resettable in the field through the keypad. Password security shall be available to protect drive parameters from unauthorized personnel. The drive set up parameters shall be able to be transferred to new boards to reprogram spare boards.

   c. The following digital door-mounted keypad indications may be selectively displayed:

      1) Speed demand in percent.
      2) Output current in amperes.
      3) Output frequency in hertz.
      4) Input voltage.
      5) Output voltage.
      6) Total 3 phase kW.
      7) Kilowatt-hour meter (may be provided as a separate door mounted unit).
      8) Elapsed time running meter (may be provided as a separate door mounted unit).
      9) RPM.
      10) DC bus voltage.
      11) VFD will support an integral PID or PI algorithm.
      12) Value of remote speed control input signal

   d. Provide capability for local manual control or remote control selectable at the VFD using the “Local – Off – Remote” (LOR) selector switch indicated on the Project Drawings. Drive shall be activated when the selector switch is selected for “Local”, and shall be controlled via an external stop/start control feature and speed control signal when selected for “Remote”.

D. Enclosure

1. All VFD components shall be installed by the manufacturer or by a manufacturer’s authorized service center and mounted, wired and properly

grounded in a NEMA 12 ventilated enclosure. Finished VFD enclosure shall maintain the NEMA 12 integrity of the enclosure. VFD shall be suitable for floor mounting.

2. Provide devices and nameplates as indicated on the Contract Drawings.

E. Protective Features and Circuits

1. The controller shall include the following alarms and protective features:

a. Instantaneous over current and over voltage trip.
b. Under voltage and power loss protection.
c. Power unit over temperature alarm and protection. Upon sensing an over temperature condition, the VFD is to automatically trip.
d. Electronic motor inverse time overload protection.
e. Responsive action to motor winding temperature detectors or thermostatic switches. A dry contact (NC) input to the VFD is required.
f. When power is restored after a complete power outage, the VFD shall be capable of catching the motor while it is still spinning and restoring it to proper operating speed without the use of an encoder.
g. The VFD shall be protected from damage due to the following, without requiring an output contactor:

1) Three phase short circuit on VFD output terminals.
2) Loss of input power due to opening of VFD input disconnecting device or utility power failure during VFD operation.
3) Loss of one (1) phase of input power.

h. The VFD shall be able to withstand the following fault conditions without damage to the power circuit components:

1) Failure to connect a motor to the VFD output.
2) VFD output open circuit that may occur during operation.
3) VFD output short circuit that may occur during operation.

i. The VFD shall be provided with a power failure recycle timer to prevent simultaneous start-up of motors due to restart after a power failure.

F. Parameter Settings

1. The following system configuration settings shall be provided and field adjustable, without exception, through the keypad/display unit. Except for Motor Nameplate Data, all parameters shall be adjustable while the processor is on-line and the drive is running:

   a. Motor Nameplate Data.

      1) Motor Frequency.
      2) Number of Poles.
      3) Full Load Speed.
      4) Motor Volts.
      5) Motor Full Load Amps.
      6) Motor Hp.
      7) Current Limit, Max.

   b. VFD Configuration Parameters.

      1) Independent Accel/Decel Rates.
      2) Max./Min. Speed (Frequency).
      3) Catch a Spinning Load Selection.
      4) Start Boost.
      5) Running Boost.
      6) Volts/Hertz Ratio.
      7) Overspeed Trip.
      8) Overload Trip Curve Selection.
      9) Overload Trip Time Selection.

   c. VFD Automatic Control.

      1) PID or PI utilizing an internal or external setpoint.
      2) 3 selectable critical speed avoidance bands with programmable bandwidths.
      3) Auto start functions: On/Off, Delay On/Off. Operable from a 4-20mA signal or from the PID/PI output, command, or feedback signal. Provide capability for remote 4-20 mA speed control signal from Pump Control Panel programmable controller.
      4) Programmable loss of signal control: Stop, maintain last speed, or default to preselected setpoint.

2. All drive setting adjustments and operation parameters shall be stored in a parameter log, which lists allowable maximum and minimum points as well as the present set values. This parameter log shall be accessible via a communications port as well as on the keypad display.

G. Input/Output Features

1. Two programmable analog inputs (0-20mA/0-10V isolated).

2. Two programmable analog outputs (0-20mA isolated).

3. Six programmable digital inputs.

4. Three programmable digital outputs (dry contact relays).

5. System Program providing built-in drive control or application specific configuration capability.

6. Input and output signals as indicated on the Contract Drawings.

H. Diagnostic Features and Fault Handling

1. The VFD shall include a comprehensive microprocessor based digital diagnostic system, which monitors its own control functions and displays faults and operating conditions.

2. A "Fault Log" shall be accessible line by line on the keypad display. The "FAULT LOG" shall also record, store, display and output to a communications port upon demand, the following for the 8 most recent events:

a. Type of fault.

1) All faults and events shall be stored and displayed in English, not fault codes.\

I. Variable Frequency Drive shall be as shown on the City's approved products list.

2.04 DRIVE OPTIONS

A. Provide the following to the VFD. All special features shall be factory mounted and wired within the VFD enclosure unless otherwise specified.

B. Provide auxiliary relays and other accessories as indicated on the Project Drawings.

C. Optional Ethernet communication module for the VFD shall be included.

PART 3 - EXECUTION

3.01 GENERAL

A. Provide each VFD with a laminated plastic nameplate engraved to indicate the equipment it controls.

3.02 INSTALLATION

A. Install VFD on floor on a house keeping pad.

B. Connections to external equipment and connections of the incoming service shall be as shown or, as required, by equipment manufacturer.

C. Wires from each compartment shall be individually bound and tagged.

D. Enclosures and ground busses shall be grounded as required by the NEC and, as indicated, on the drawings.

3.03 TESTING AND ADJUSTING

A. Start-up services for VFDs shall be provided by a factory trained and authorized manufacturer’s representative, and shall include inspection of field wiring, complete operational test, and final adjustments to AC variable frequency drive to assure proper performance.

B. A factory trained and authorized manufacturer’s representative shall provide instructions to the Owner's operating personnel at the Start-Up and Demonstration event.

C. Adjust all motor circuit protector or circuit breaker settings to coordinate with the motor size to prevent it from exceeding its rating or duty cycle.

3.04 FACTORY TESTING

A. The VFD manufacturer shall provide as a minimum, the following quality assurance steps within his factory:

1. Incoming inspection of components and raw materials based on strategic supplier base and experience. Sampling plans based on ISO 9001 quality standards.

2. All manufacturing locations shall be certified to the ISO-9001 Series of Quality Standards as well as the ISO-14001 Environmental Standards. This insures all quality and corrective action procedures are documented and implemented.

3. All products subject to 100% testing and final inspection; no sampling plans permitted.

3.05 SPARE PARTS

A. The following spare parts shall be furnished:

1. Three of each type of fuse.

2. Two of each type of converter power semiconductor.

3. Two of each type of inverter power semiconductor.

4. Five of each type of panel lamp or LED color.

5. One of each type of control printed circuit board and gate firing boards.

6. One keypad assembly of each type used.

3.06 ADJUSTABLE PROTECTIVE DEVICES SETTINGS

A. Coordinate with motor manufacturer and VFD manufacturer to recommend settings of adjustable protective devices.

B. Set protective devices based on recommended settings.

END OF SECTION

APPENDIX J

VARIABLE FREQUENCY DRIVE DRAWINGS

This page intentionally left blank.

INSTRUMENT SYMBOL IDENTIFIERS

J-3 (J-1 / J-2) J-4 J-5 J-6

J-1: IDENTIFICATION LETTERS (SEE TABLE BELOW)
J-2: LOOP NUMBER
J-3: VENDER DESIGNATOR (SEE NOTE 3)
J-4: FUNCTION BLOCK (SEE TABLE BELOW)
J-5: PANEL NUMBER
J-6: HAND SWITCH DESIGNATOR (SEE BELOW)

	FIRST LETTER		SUCCEEDING LETTER		
	VARIABLE	MODIFIER	PASSIVE FUNCTION	OUTPUT FUNCTION	MODIFIER
A	ANALYSIS		ALARM		AUTOMATIC
B	BREAKER		USER'S CHOICE	CLOSE OR STOP	BYPASS
C	COMMUNICATIONS			CONTROL	CLOSED
D	DENSITY	DIFFERENTIAL		OPEN OR START	
E	VOLTAGE (EMF)		PRIMARY ELEMENT	SENSOR	
F	FLOW RATE	RATIO	FAIL	FAIL	FAIL
G	GAUGING		GLASS		LOCAL/MANUAL/HAND
H	HAND				HIGH OR OPEN
I	CURRENT		INDICATE		INTERMEDIATE
J	POWER	SCAN			
K	TIME	TIME RATE		CONTROL STATION	
L	LEVEL		LIGHT		LOW
M	MOTOR	MOMENTARY		MOTOR	MIDDLE
N	USER'S CHOICE		INPUT	FORWARD	ON OR OPERATE
O	USER'S CHOICE			OFF	OPEN
P	PRESSURE	PNEUMATIC	POINT (TEST)	POSITION	
Q	QUANTITY OR EVENT	TOTALIZE		EMERGENCY/ABNORMAL	
R	RADIOACTIVITY		RECORD OR PRINT	REMOTE	RUN
S	SPEED OR FREQUENCY	SUM	SWITCH	SWITCH	STOP
T	TEMPERATURE			TRANSMIT	TRANSDUCER
U	MULTI VARIABLE		MULTIFUNCTION	MULTIFUNCTION	MULTIFUNCTION
V	VARIABLE OR VISCOSITY			VALVE OR DAMPER	VFD / VALVE
W	WEIGHT OR FORCE		WELL		
X	MOD, LIGHT OR VALVE		UNCLASSIFIED	UNCLASSIFIED	UNCLASSIFIED
Y	INTERLOCK			RELAY OR COMPUTE	RESET
Z	POSITION			DRIVE OR ACTUATOR	

GENERAL INSTRUMENT OR FUNCTION SYMBOLS	FIELD MOUNTED	PRIMARY LOCATION ACCESSIBLE TO OPERATOR	AUXILIARY LOCATION ACCESSIBLE TO OPERATOR	NORMALLY INACCESSIBLE OR BEHIND THE PANEL
DISCRETE INSTRUMENTS				
SHARED DISPLAY, SHARED CONTROL				
COMPUTER FUNCTION				
PROGRAMMABLE LOGIC CONTROL				

J-4 FUNCTION BLOCK DESIGNATORS

- SUMMING
- DIFFERENCE
- INTEGRAL
- DERIVATIVE
- MULTIPLYING
- DIVIDING
- CONVERT:
- ROOT EXTRACTION
- SQUARE ROOT
- EXPONENTIAL
- HIGH SELECTING
- LOW SELECTING
- BIAS
- NON-LINEAR OR UNSPECIFIED FUNCTION

* E-VOLTAGE, I-CURRENT, P-PNEUMATIC, A-ANALOG, B-BINARY, H-HYDRAULIC, O-ELECTROMAGNETIC, SONIC, R-RESISTANCE, D-DIGITAL

J-6 HAND SWITCH DESIGNATORS

HS XXX — SELECTOR SWITCH (MAINTAINED CONTACTS)

XXX = HOA: HAND-OFF-AUTO
= HOR: HAND-OFF-REMOTE
= F-R: FORWARD-REVERSE
= I-O: ON-OFF
= B-V: BYPASS-VFD
= L-O-R: LOCAL-OFF-REMOTE
= OC: OPEN-CLOSE
= POT: POTENTIOMETER
= OCA: OPEN-CLOSE-AUTO
= L-R: LOCAL-REMOTE

HMS XXX — PUSHBUTTON (MOMENTARY CONTACTS)

XXX = RES : RESET
XXX = ACK : ACKNOWLEDGE

INSTRUMENT SUPPLY SERVICES

AS — INSTRUMENT AIR SUPPLY REFER TO ISA RP7.7 FOR INSTRUMENT AIR QUALITY STANDARDS

ES — 120 VAC ELECTRICAL SERVICE (DIFFERENT VOLTAGES ARE SPECIFICALLY NOTED)

PLC INPUT/OUTPUT

- DISCRETE INPUT
- ANALOG INPUT
- DISCRETE OUTPUT
- ANALOG OUTPUT

PLC INDICATION

XXX

MODIFIER XXX LEGEND
PCP = PUMP CONTROL PANEL (PCP)

VALVE OPERATORS

- DIAPHRAGM
- CYLINDER OPERATOR
- DIAPHRAGM PRESSURE BALANCED
- SOLENOID
- MOTOR
- SOLENOID VALVE

PRIMARY FLOW ELEMENTS

- ORIFICE PLATE
- VENTURI TUBE
- FLUME
- WEIR PLATE
- MAGNETIC FLOW METER
- SONIC FLOW METER
- FLOW NOZZLE
- VORTEX SENSOR

LINES

- MAIN PROCESS
- PIPE SYSTEM
- PIPE SIZE IN INCHES
- ELECTRICAL SIGNAL
- SOFTWARE OR DATA LINK
- PNEUMATIC
- HYDRAULIC
- CAPILLARY TUBE
- ELECTROMAGNETIC OR SONIC (GUIDED)

MECHANICAL — ELECTRICAL

OR — CONNECTED

NOT CONNECTED

MISCELLANEOUS

- FLANGE
- UNION
- TEE
- REDUCER
- DIAPHRAGM SEAL
- INTERLOCK. NUMBER IS THE CROSS REFERENCE TO A SPECIFIC ELEMENTARY DIAGRAM OR TO A SPECIFIC CONTROL STRATEGY DESCRIBED IN THE SPECS
- EXPANSION JOINT
- FLEXIBLE COUPLING
- FLANGED COUPLING ADAPTER
- SLUICE/SIDE/WEIR GATE
- WATER LINE
- LEVEL PROBES (CONDUCTIVITY)
- LEVEL PROBES (ULTRASONIC)
- FLOAT SWITCH

EQUIPMENT

- 3-PHASE MONITOR
- ELAPSED TIME METER
- OPERATOR INTERFACE TERMINAL
- LEVEL TRANSDUCER (SUBMERSIBLE)
- HORN
- SUBMERSIBLE PUMP
- PUMP

VALVES

- GATE VALVE
- GLOBE VALVE
- PLUG VALVE
- CHECK VALVE
- PINCH VALVE
- DIAPHRAGM VALVE
- BUTTERFLY VALVE
- BALL VALVE

TYPICAL CONNECTIONS

- IN-LINE DEVICE
- DIRECT CONNECTION TO PROCESS
- TEMPERATURE ELEMENT WITH WELL
- RADIATION OR SONIC SENSING
- DIAPHRAGM SEAL CONNECTION

ABBREVIATIONS

A	= ALARM
AI	= ANALOG INPUT
AO	= ANALOG OUTPUT
AUTO	= AUTOMATIC
ATS	= AUTOMATIC TRANSFER SWITCH
CIM	= COMMUNICATIONS INTERFACE MODULE
CPT	= CONTROL POWER TRANSFORMER
DI	= DISCRETE INPUT
DO	= DISCRETE OUTPUT
DPDT	= DOUBLE POLE-DOUBLE THROW
E-STOP	= EMERGENCY STOP BUTTON
EUH	= ELECTRIC UNIT HEATER
ETM	= ELAPSED TIME METER
F	= FAULT
FP	= FLOW PACE
HMI	= HUMAN MACHINE INTERFACE
I	= INTERLOCK CONTROL
I/O	= INPUT/OUTPUT
IP	= INFLUENT PUMP
LM	= LEVEL MAINTAIN CONTROL
M	= ELECTRIC MOTOR
MMR	= MOTOR MANAGEMENT RELAY
MOD	= MOTOR OPERATED DAMPER
MPD	= MOTOR PROTECTIVE DEVICE
O/C	= OPEN/CLOSE
OIT	= OPERATOR INTERFACE TOUCHSCREEN
OT	= OVER TEMPERATURE
PDIT	= PRESSURE DIFFERENTIAL INDICATION TRANSMITTER
PLC	= PROGRAMMABLE LOGIC CONTROLLER
PM	= PRESSURE MAINTAIN CONTROL
PSCADA	= PLANT SCADA SYSTEM
PVCC	= PVC COATED
R/O	= RUN/OFF
RTU	= REMOTE TELEMETRY UNIT
SL	= SEAL LEAK
SP	= SPEED
SP	= SUMP PUMP
S/S	= START/STOP
SSRV	= SOLID STATE REDUCED VOLTAGE
TEMP	= TEMPERATURE
TSP	= TWISTED SHIELDED PAIR
TYP	= TYPICAL
VAC	= VOLTS/ALTERNATING CURRENT
VDC	= VOLTS/DIRECT CURRENT
VFD	= VARIABLE FREQUENCY DRIVE
XX	= XX
XXX	= XXX

EQUIPMENT ABBREVIATIONS

IC	= INTEGRAL CONTROL UNIT
FSTB	= FLOAT SWITCH TERMINAL BOX
MCC	= MOTOR CONTROL CENTER
PCP	= PUMP CONTROL PANEL
PLC	= PROGRAMMABLE LOGIC CONTROLLER
TIP	= TERMINAL INTERFACE PANEL
VFD	= VARIABLE FREQUENCY DRIVE

ELEMENTARY WIRING SYMBOLS

- CONTROL RELAY
- PLC OUTPUT VIA INTERPOSING RELAY
- NORMALLY OPEN CONTACT
- NORMALLY CLOSED CONTACT
- FUSE
- CIRCUIT BREAKER
- PUSHBUTTON
- SELECTOR SWITCH X00 = REPRESENTS THE SWITCH POSITIONS
- MOTOR
- TERMINAL BLOCK
- GROUND
- FLOAT SWITCH
- NORMALLY OPEN LIMIT SWITCH
- NORMALLY OPEN TIMED CLOSED CONTACT
- THERMOSTAT CLOSE ON RISING/TEMPERATURE
- INDICATING LIGHT – A = AMBER, G = GREEN, R = RED, W = WHITE

NOTES:

1. THIS IS A GENERALIZED LEGEND SHEET. THIS PROJECT MAY NOT USE ALL INFORMATION SHOWN.
2. INFORMATION SHOWN MAY NOT BE ALL INCLUSIVE. ALSO SEE ISA S5.1, S5.3 AND S7.3.

NANSEMOND 1646 SUFFOLK 1742 19 74 CITY of SUFFOLK, VIRGINIA

CITY OF SUFFOLK, VIRGINIA

DEPARTMENT OF PUBLIC UTILITIES
442 W. WASHINGTON STREET
SUFFOLK, VA 23434

PUBLIC FACILITIES MANUAL VOLUME II

WASTEWATER PUMP STATION INSTRUMENTATION AND CONTROL

REVISIONS

NO.	DESCRIPTION	DATE

LEGEND AND ABBREVIATIONS

Drawing No.

I-1VS

Scale: NOT TO SCALE | 2017 RELEASE 1

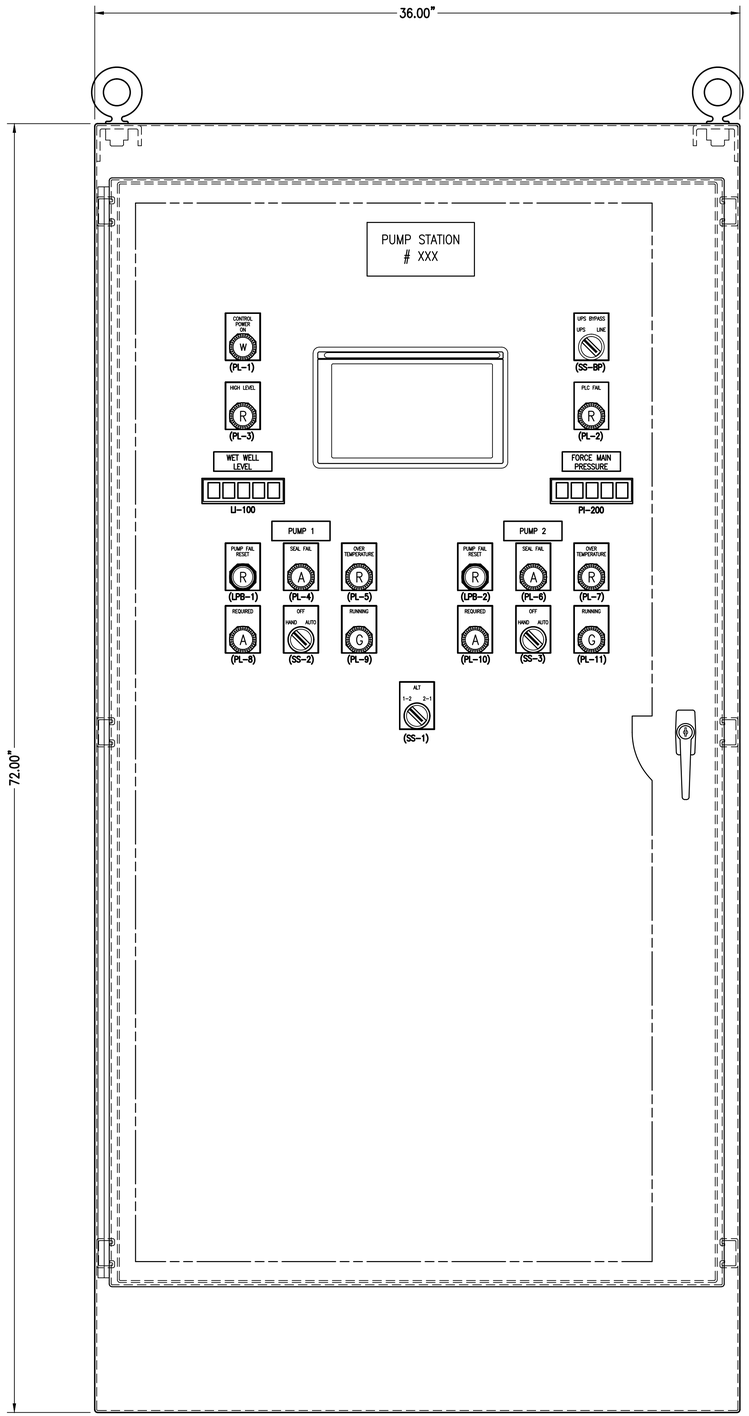

ELEVATION - PCP

NOT TO SCALE HOFFMAN A723618FS (1)(2)

SPECIFIC NOTES:

(1) PANEL DIMENSIONS SHOWN ARE MINIMUM REQUIRED. CONTROL PANEL HEIGHT NOT TO EXCEED 72".

(2) FLOOR MOUNTED PANELS SHALL BE INSTALLED ON 3" HOUSEKEEPING PAD.

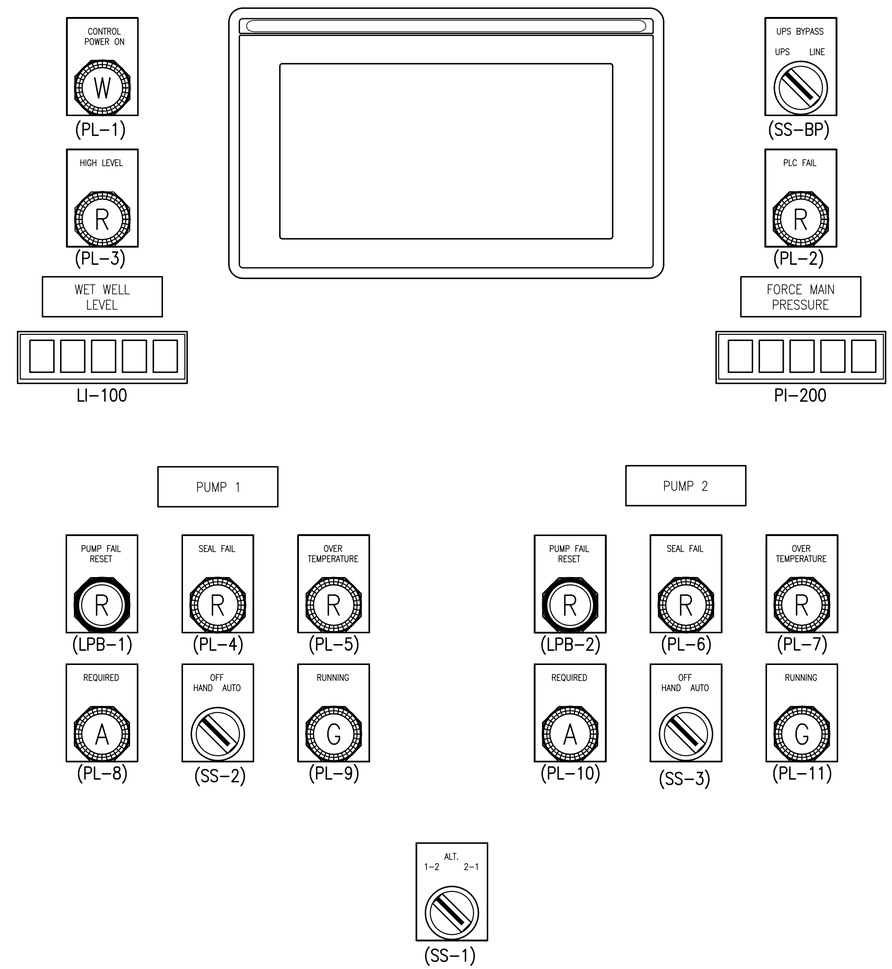

DOOR DEVICE LAYOUT

NANSEMOND 1646 SUFFOLK 1742
19 74
CITY of SUFFOLK, VIRGINIA

CITY OF SUFFOLK, VIRGINIA

DEPARTMENT OF PUBLIC UTILITIES
442 W. WASHINGTON STREET
SUFFOLK, VA 23434

PUBLIC FACILITIES MANUAL VOLUME II

WASTEWATER PUMP STATION INSTRUMENTATION AND CONTROL

REVISIONS

NO.	DESCRIPTION	DATE

PUMP CONTROL PANEL ELEVATIONS

Drawing No.

I-2VS

Scale: NOT TO SCALE | 2017 RELEASE 1

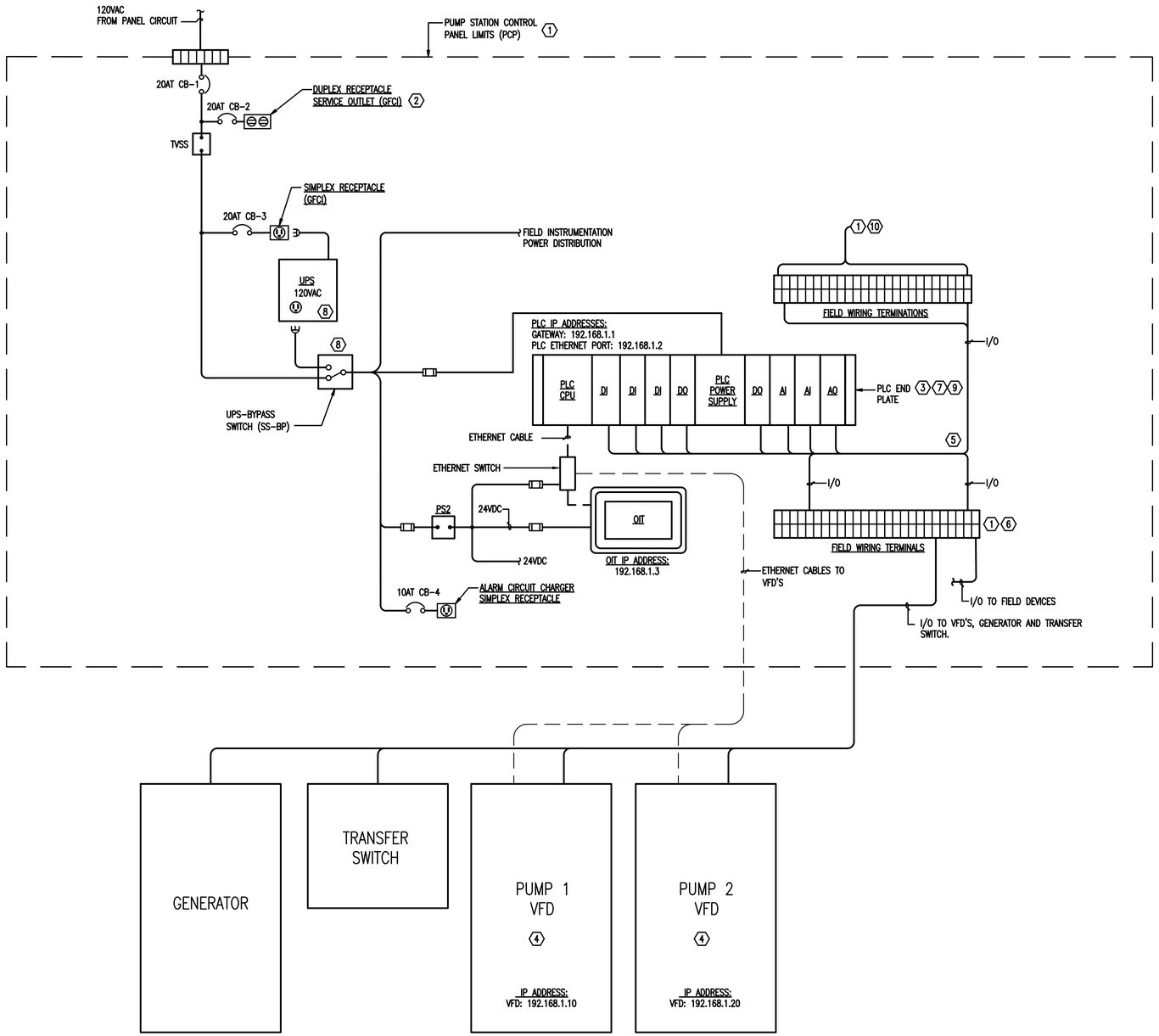

PCP SYSTEM LAYOUT

NOT TO SCALE

SPECIFIC NOTES:

1. SCHEMATIC REPRESENTATION OF FIELD TERMINALS. SEPARATION OF DISCRETE AND ANALOG SIGNALS NOT SHOWN. SURGE PROTECTORS, AND RELAYS NOT SHOWN FOR CLARITY. REFER TO PCP ELEMENTARY DIAGRAM AND I/O LIST IN SPECIFICATIONS FOR SPECIFIC WIRING.
2. PROVIDE SERVICE OUTLET (GFCI)
3. PROVIDE I/O CARDS IN QUANTITIES AS REQUIRED. REFER TO PCP ELEMENTARY DIAGRAM AND I/O LIST IN SPECIFICATIONS FOR I/O REQUIREMENTS. I/O THAT IS NOT USED SHALL BE WIRED TO FIELD TERMINAL BLOCKS AND LABELED AS SPARES.
4. VARIABLE FREQUENCY DRIVES ARE MOUNTED REMOTELY FROM CONTROL PANEL PCP.
5. DIAGRAM IS SCHEMATIC REPRESENTATION ONLY. PROVIDE TERMINAL BLOCKS, TERMINALS, WIRING, LABELS, RELAYS, SWITCHES AND COMPONENTS REQUIRED FOR PLC SYSTEM INSTALLATION AS REQUIRED FOR A COMPLETE OPERATING SYSTEM.
6. PROVIDE INTERPOSING RELAYS WITH SNUBBER CIRCUIT FOR DISCRETE OUTPUTS, INCLUDING SPARE DISCRETE OUTPUTS. PROVIDE SURGE PROTECTION FOR ANALOG INPUT CIRCUITS AND FUSES FOR ANALOG OUTPUT CIRCUITS, INCLUDING SPARES AI AND AO POINTS.
7. PROVIDE NECESSARY END PLATES FOR PLC AT BOTH ENDS IF REQUIRED.
8. PROVIDE UPS WITH BYPASS SWITCH FOR BACK-UP POWER; MINIMUM OF 2 HOURS.
9. NOT ALL REQUIRED I/O CARDS, SLOTS AND I/O RACKS ARE SHOWN. PROVIDE QUANTITY OF I/O CARDS, CARD TYPES, I/O RACKS, INTERFACE MODULES AND CABLING TO ACCOMMODATE THE QUANTITY OF I/O INDICATED IN THE SPECIFICATIONS.
10. PROVIDE SCADA INTERFACE TERMINALS FOR CONNECTION TO SCADA SYSTEM. SCADA I/O POINT SHALL BE AS SPECIFIED AND/OR AS DIRECTED BY THE OWNER. SEE SHEET I-11VS FOR DETAILS

NANSEMOND 1646 SUFFOLK 1742
19 74
CITY of SUFFOLK, VIRGINIA

CITY OF SUFFOLK, VIRGINIA

DEPARTMENT OF PUBLIC UTILITIES
442 W. WASHINGTON STREET
SUFFOLK, VA 23434

PUBLIC FACILITIES MANUAL VOLUME II

WASTEWATER PUMP STATION INSTRUMENTATION AND CONTROL

REVISIONS

NO.	DESCRIPTION	DATE

PUMP CONTROL SYSTEM LAYOUT

Drawing No.

I-3VS

Scale: NOT TO SCALE | 2017 RELEASE 1

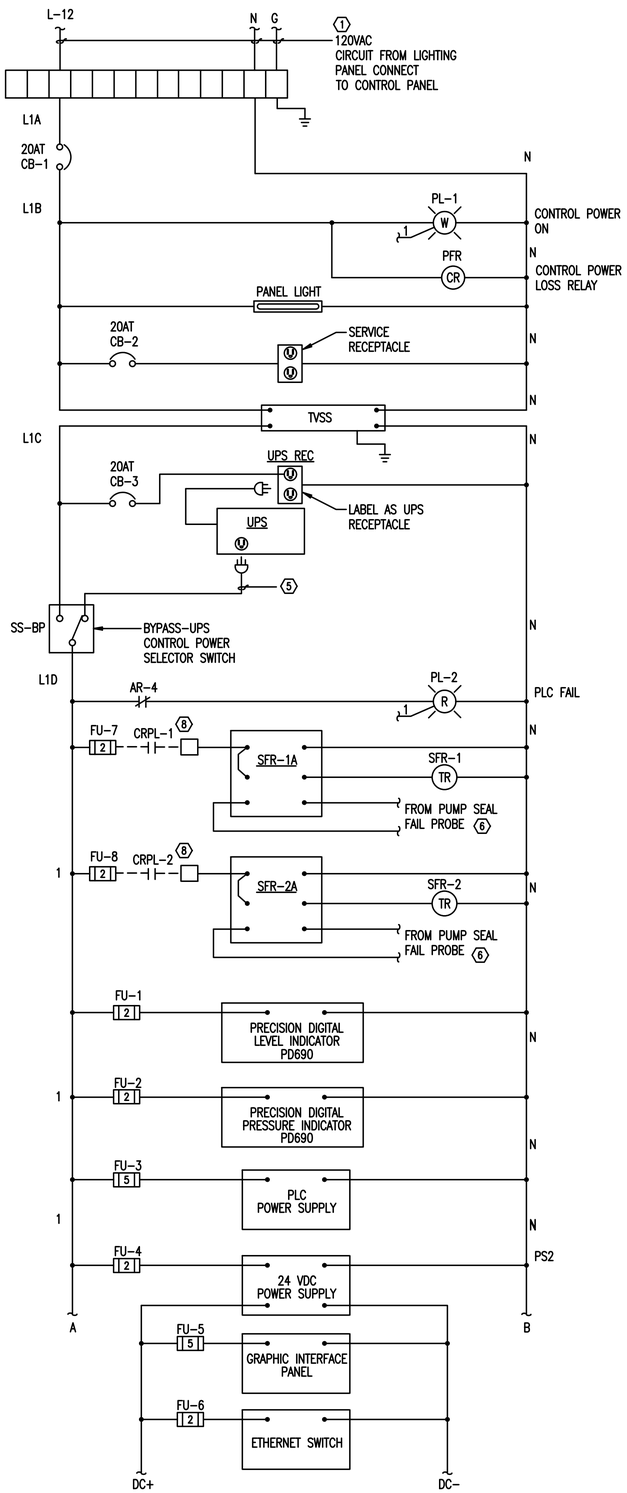

PUMP CONTROL PANEL PCP ELEMENTARY DIAGRAM - CONTROLS

NOT TO SCALE

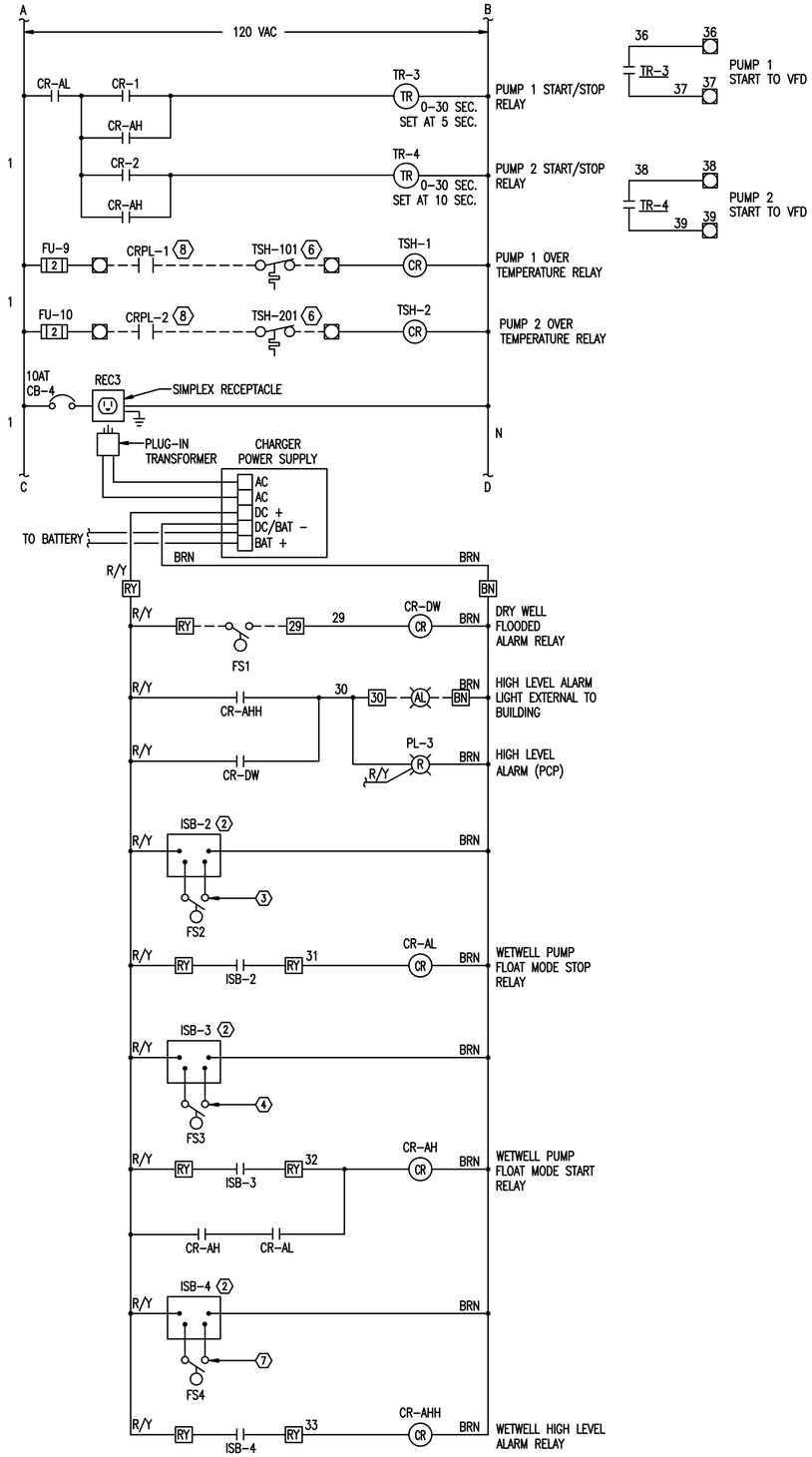

FLOAT CIRCUIT PART OF PCP

NOT TO SCALE

SPECIFIC NOTES

1. CONNECT TO LIGHTING PANEL BREAKER.
2. INTRINSICALLY SAFE BARRIER FOR LEVEL FLOAT SWITCH SIGNAL FROM WET WELL. PROVIDE PHYSICAL BARRIER BETWEEN INTRINSICALLY SAFE CIRCUIT WIRING AND ALL OTHER WIRING PER NEC REQUIREMENTS. MAINTAIN A MINIMUM OF 2" BETWEEN ISB AND ALL OTHER COMPONENTS AND WIRING IN PANEL. PROVIDE LABELS FOR CONDUIT CARRYING CIRCUIT TO INDICATE "INTRINSICALLY SAFE CIRCUIT".
3. CONNECT FLOAT SWITCH WIRING FROM LOW WET WELL LEVEL FLOAT SWITCH TO ISB-2. ENSURE WIRING IS INSTALLED PER NEC ARTICLE 504.
4. CONNECT FLOAT SWITCH WIRING FROM HIGH WET WELL LEVEL FLOAT SWITCH TO ISB-3. ENSURE WIRING IS INSTALLED PER NEC ARTICLE 504.
5. POWER CORD FOR UPS.
6. SEAL FAILURE RELAYS AND PUMP OVER TEMPERATURE CONTACT CONNECT TO PUMPS THROUGH CONDUIT FROM PUMP SPLICE BOX.
7. CONNECT FLOAT SWITCH WIRING FROM HIGH-HIGH LEVEL FLOAT SWITCH TO ISB-4. ENSURE WIRING IS INSTALLED PER NEC ARTICLE 504.
8. CRPL-1 LOCATED IN PUMP 1 VFD, CRPL-2 LOCATED IN PUMP 2 VFD

NANSEMOND 1646 SUFFOLK 1742 19 74 CITY of SUFFOLK, VIRGINIA

CITY OF SUFFOLK, VIRGINIA

DEPARTMENT OF PUBLIC UTILITIES
442 W. WASHINGTON STREET
SUFFOLK, VA 23434

PUBLIC FACILITIES MANUAL VOLUME II

WASTEWATER PUMP STATION INSTRUMENTATION AND CONTROL

REVISIONS

NO.	DESCRIPTION	DATE

PUMP CONTROL PANEL POWER WIRING

Drawing No.

I-4VS

Scale: NOT TO SCALE | 2017 RELEASE 1

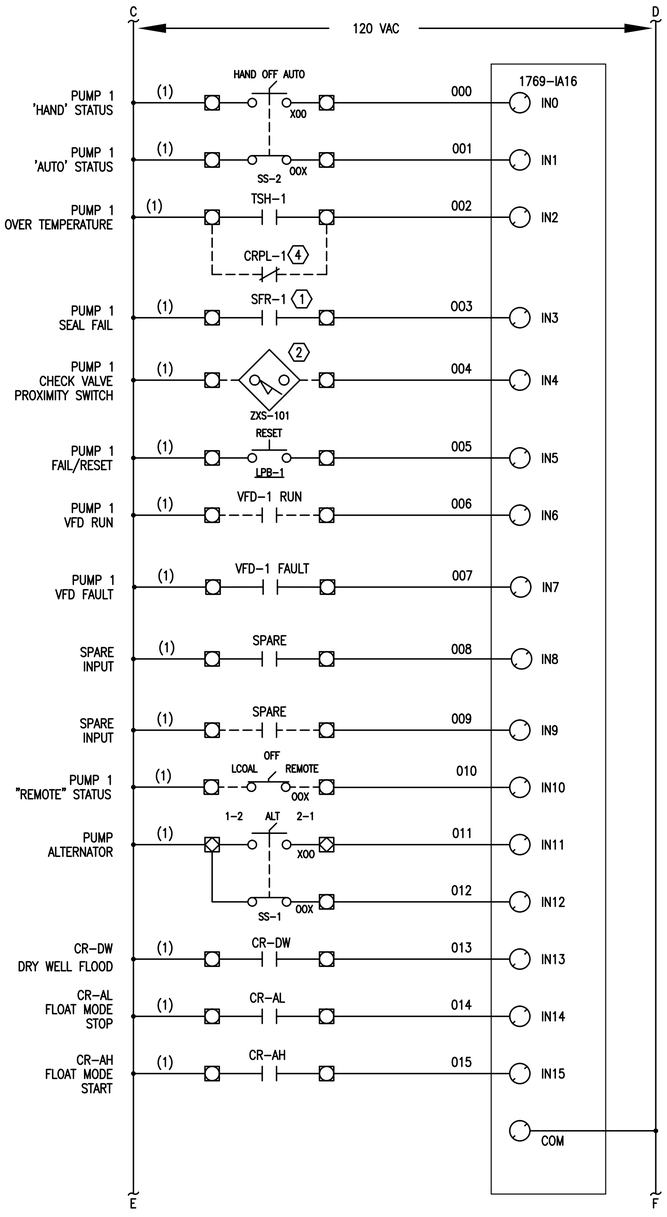

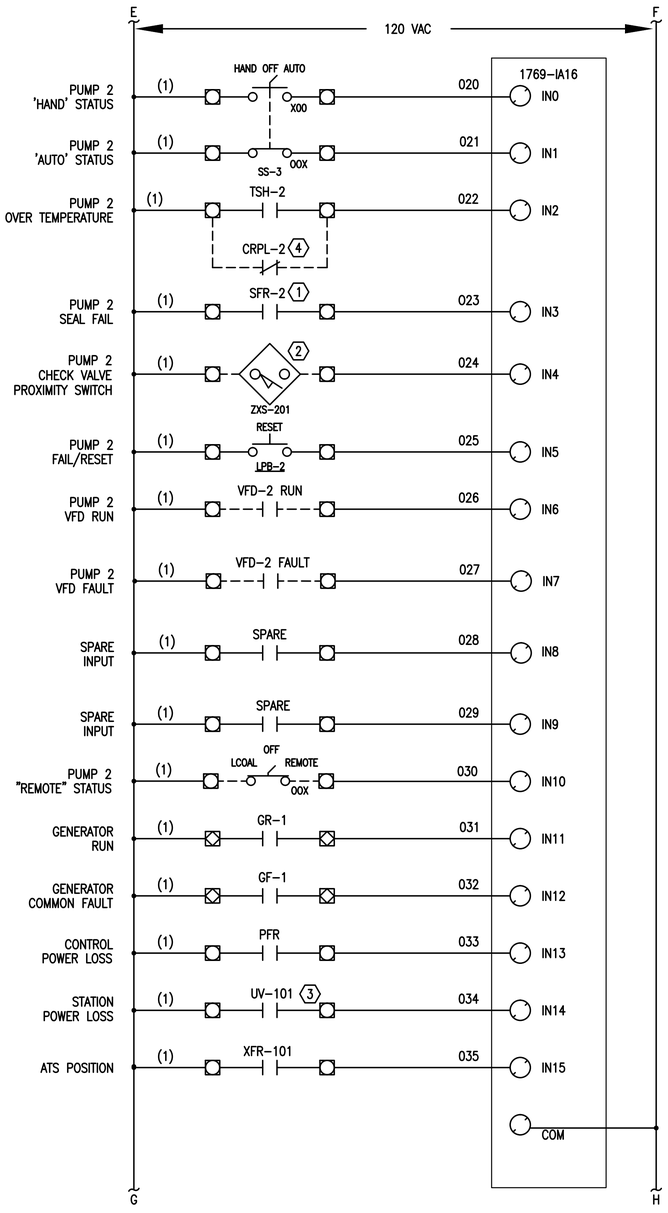

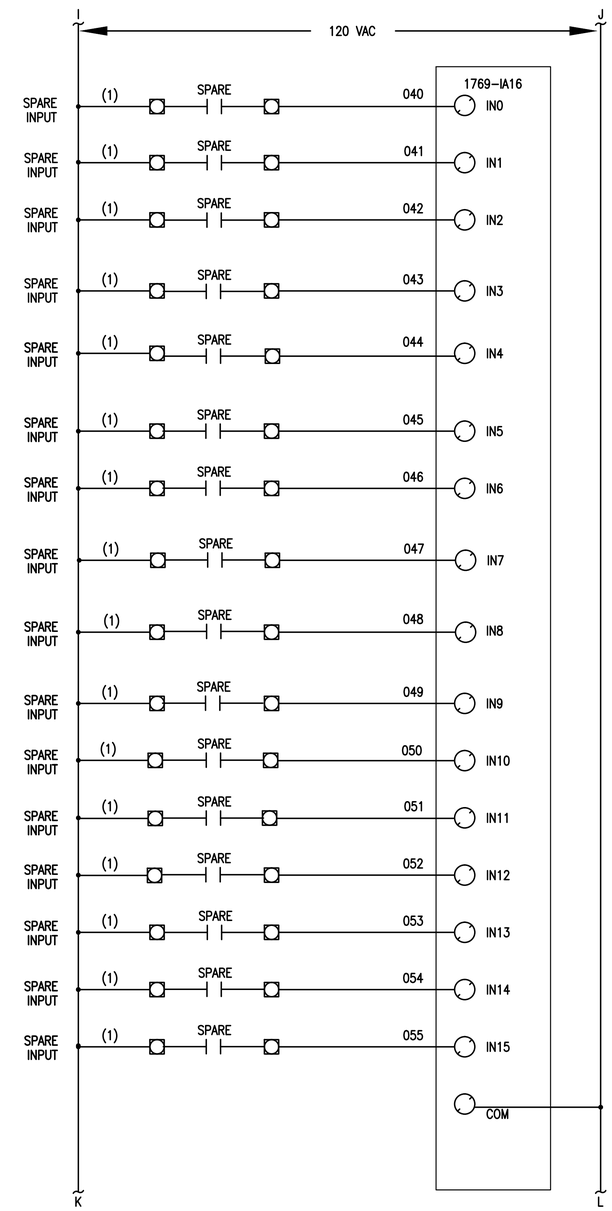

PUMP CONTROL PANEL PLC INPUT

NOT TO SCALE

DRAWING NOTES:

1. PUMP SEAL MONITOR AND PUMP OVER TEMPERATURE ARE WIRED TO PUMP THROUGH CONDUIT AND SPLICE BOX. PROVIDE TERMINALS IN SPLICE BOX FOR PUMP CONNECTIONS.
2. CHECK VALVE PROXIMITY SWITCHES SHALL BE CLOSED WHEN CHECK VALVES ARE CLOSED.
3. UNDERVOLTAGE MONITOR SHALL BE MOUNTED IN GENERATOR TRANSFER SWITCH AND CONNECTED TO LOAD SIDE.
4. CRPL-1 LOCATED IN PUMP 1 STARTER, CRPL-2 LOCATED IN PUMP 2 STARTER

DEVICES SHOWN - - - - - ARE FIELD MOUNTED.

NANSEMOND 1646 SUFFOLK 1742 19 74 CITY of SUFFOLK, VIRGINIA

CITY OF SUFFOLK, VIRGINIA

DEPARTMENT OF PUBLIC UTILITIES
442 W. WASHINGTON STREET
SUFFOLK, VA 23434

PUBLIC FACILITIES MANUAL VOLUME II

WASTEWATER PUMP STATION INSTRUMENTATION AND CONTROL

REVISIONS

NO.	DESCRIPTION	DATE

PUMP CONTROL PANEL PLC INPUTS

Drawing No.

I-5VS

Scale: NOT TO SCALE | 2017 RELEASE 1

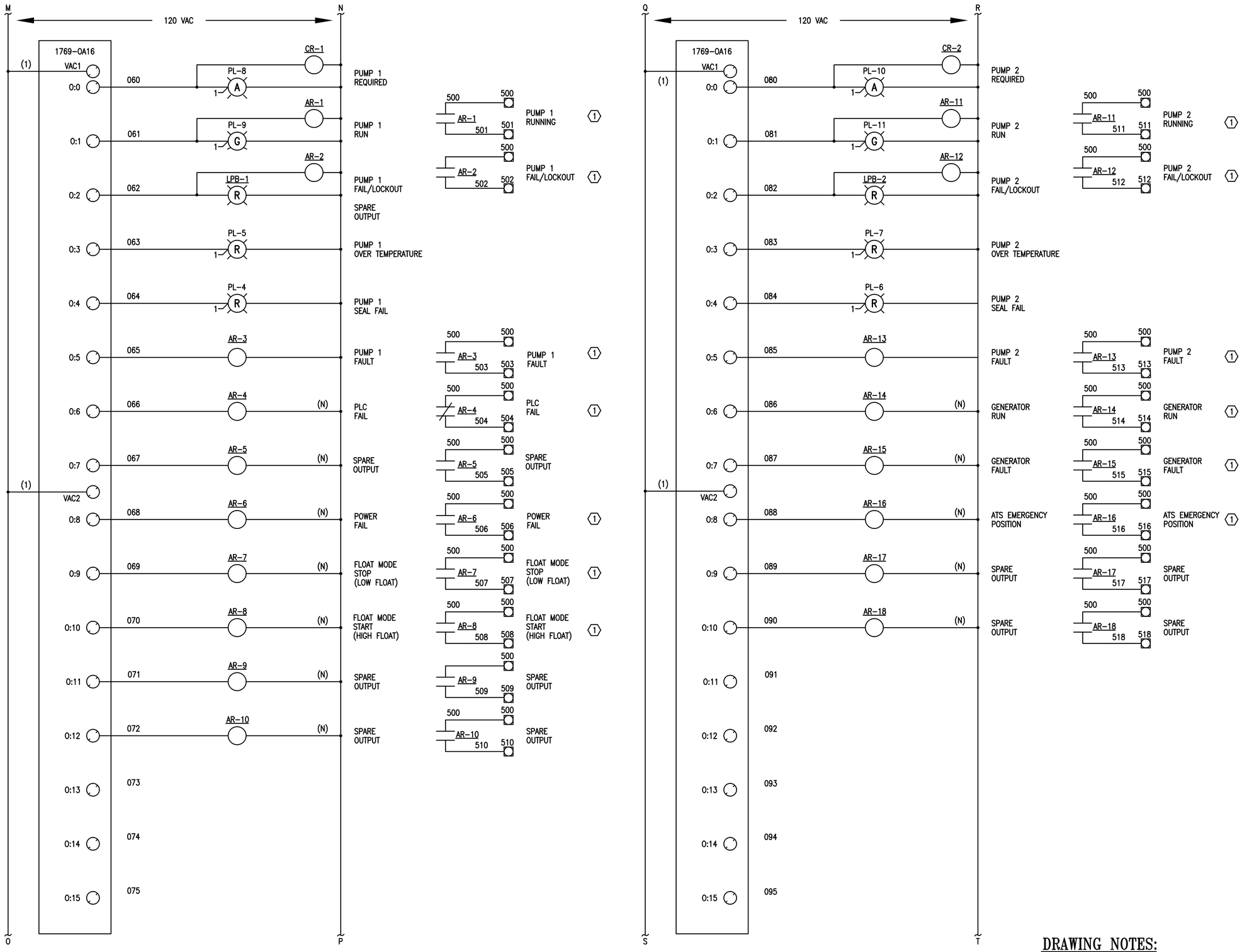

PUMP CONTROL PANEL PLC OUTPUT

NOT TO SCALE

DRAWING NOTES:

(1) STATUS AND ALARM POINTS ARE WIRED FOR SCADA SYSTEM

DEVICES SHOWN - - - - - - ARE FIELD MOUNTED.

NANSEMOND 1646 SUFFOLK 1742 19 74 CITY of SUFFOLK, VIRGINIA

CITY OF SUFFOLK, VIRGINIA

DEPARTMENT OF PUBLIC UTILITIES

442 W. WASHINGTON STREET

SUFFOLK, VA 23434

PUBLIC FACILITIES MANUAL VOLUME II

WASTEWATER PUMP STATION INSTRUMENTATION AND CONTROL

REVISIONS

NO.	DESCRIPTION	DATE

PUMP CONTROL PANEL PLC OUTPUTS

Drawing No.

I-6VS

Scale: NOT TO SCALE | 2017 RELEASE 1

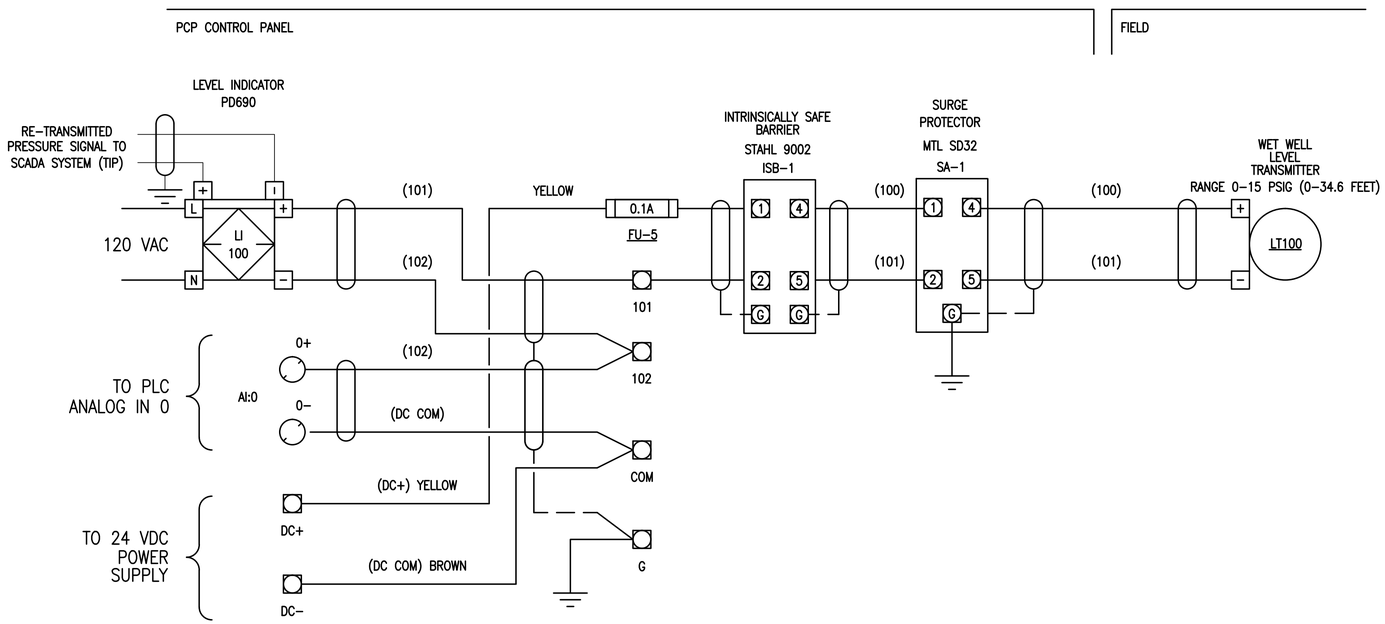

WET WELL LEVEL

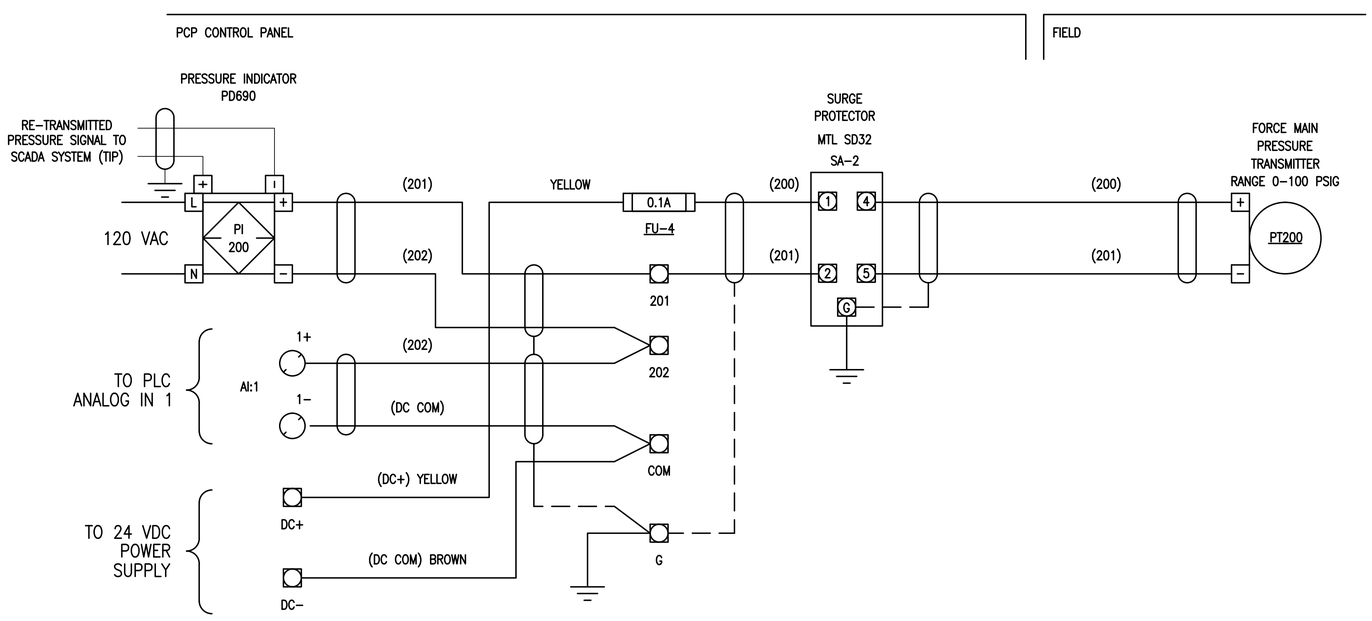

FORCE MAIN PRESSURE

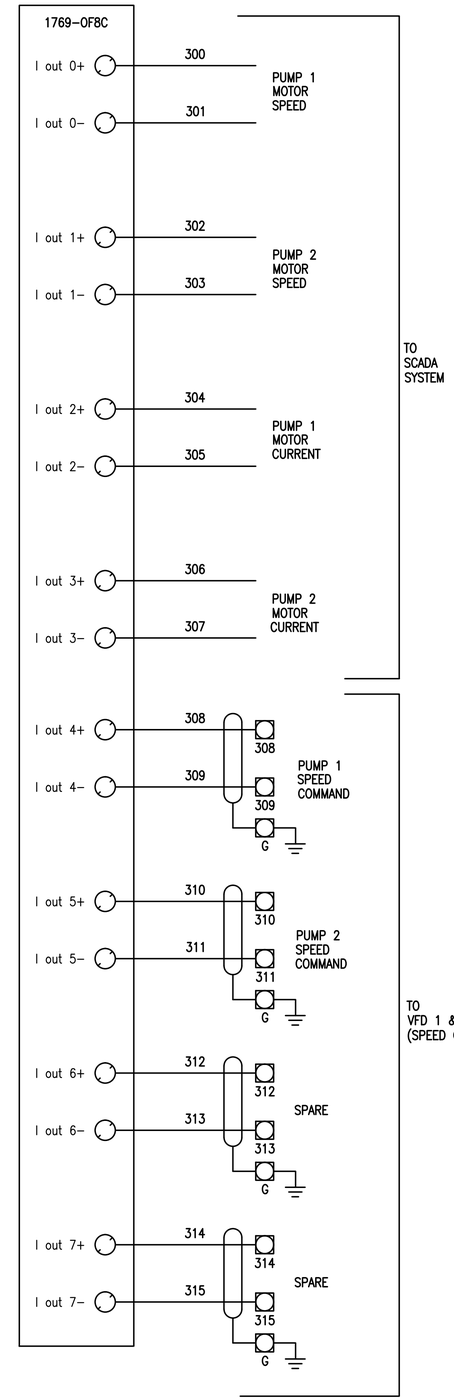

ANALOG SIGNALS TO SCADA SYSTEM & VFD'S

NANSEMOND 1646 SUFFOLK 1742
19 74
CITY of SUFFOLK, VIRGINIA

CITY OF SUFFOLK, VIRGINIA

DEPARTMENT OF PUBLIC UTILITIES
442 W. WASHINGTON STREET
SUFFOLK, VA 23434

PUBLIC FACILITIES MANUAL VOLUME II

WASTEWATER PUMP STATION INSTRUMENTATION AND CONTROL

REVISIONS

NO.	DESCRIPTION	DATE

PUMP CONTROL ANALOG LOOPS

Drawing No.

I-7VS

Scale: NOT TO SCALE | 2017 RELEASE 1

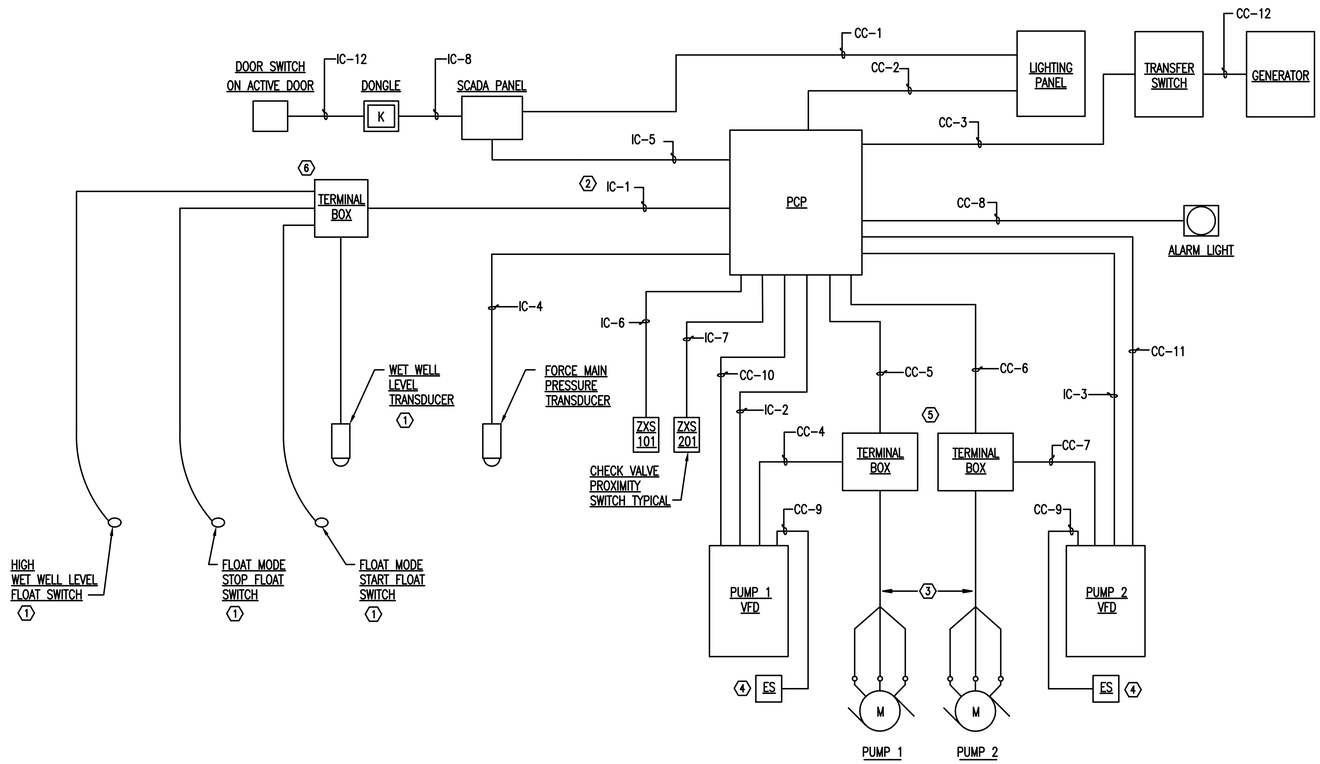

CONTROL SYSTEM RISER DIAGRAM

NOT TO SCALE

DRAWING NOTES

1. UNLESS OTHERWISE NOTED, ALL WORK SHOWN ARE NEW.
2. REFER TO ELECTRICAL DRAWINGS FOR LOCATIONS OF EQUIPMENT.

SPECIFIC NOTES

1. WET WELL DESIGNATED AS CLASS I, DIVISION 1 GROUP D HAZARDOUS LOCATION. LEVEL TRANSDUCER AND FLOAT SWITCHES SHALL BE WIRED AS AN INTRINSICALLY SAFE CIRCUITS.
2. CONDUIT SHALL BE LABELED PER NEC "INTRINSICALLY SAFE WIRING".
3. PUMP CABLES FOR POWER, SEAL MONITOR AND OVER TEMPERATURE CUTOUT. MAY BE TWO CABLES.
4. EMERGENCY STOP PUSH BUTTON MOUNTED ON WALL NEAR PUMP IN DRY WELL (PROVIDED IF STATION HAS DRYWELL).
5. FOR WET PIT DRY PIT PUMP STATIONS SPLICE BOXES MAY NOT BE REQUIRED. COORDINATE WITH PUMP MANUFACTURE WHETHER POWER CABLE AND MONITORING WIRING ARE ONE OR TWO CABLES. ON STATIONS WHERE SPLICE BOXES ARE NOT USED WIRE DIRECT TO STARTER THROUGH CC-4 AND CC-7. PUMP SEAL MONITOR AND OVER TEMPERATURE SENSORS ARE WIRED TO PUMP CONTROL PANEL FOR MONITORING AND ALARM. MOVE CC-5 AND CC-6 ACCORDINGLY.
6. SEE SHEET I-12VS FOR DETAILS.

CONDUIT AND CONDUCTOR SCHEDULE

CC-1	2#12, 1#12G-3/4" CONDUIT FROM LIGHTING PANEL TO SCADA PANEL.
CC-2	2#12, 1#12G-3/4" CONDUIT FROM LIGHTING PANEL TO PUMP CONTROL PANEL (PCP)
CC-3	12#14, 1#12G.-3/4" CONDUIT FOR UNDER VOLTAGE MONITOR STATUS, ATS POSITION, GENERATOR RUN AND GENERATOR FAIL TO PCP. (2#14 SPARE CONDUCTORS)
CC-4	SEE ELECTRICAL DRAWINGS FOR CONDUIT SIZE, WIRE SIZE AND CONDUIT NUMBERING. CONDUIT NUMBERING.
CC-5	6#14, 1#12G.-3/4" CONDUIT (2#14 SPARE CONDUCTOR INCLUDED). ACTIVE CONDUCTORS FOR PUMP 1 SEAL FAIL SENSOR AND PUMP OVER TEMPERATURE SENSORS.
CC-6	6#14, 1#12G.-3/4" CONDUIT (2#14 SPARE CONDUCTOR INCLUDED). ACTIVE CONDUCTORS FOR PUMP 2 SEAL FAIL SENSOR AND PUMP OVER TEMPERATURE SENSORS.
CC-7	SEE ELECTRICAL DRAWINGS FOR CONDUIT SIZE, WIRE SIZE AND CONDUIT NUMBERING.
CC-8	2#12, 1#12G-3/4" CONDUIT FROM PCP TO ALARM LIGHT.
CC-9	2#12, 1#12G-3/4" CONDUIT FROM STARTERS TO EMERGENCY STOP STATION (ES).
CC-10	18#14, 1#12G.-3/4" CONDUIT (4#14 SPARE CONDUCTOR INCLUDED) FOR PUMP 1 START/STOP, RUN STATUS, FAULT STATUS, CONTROL POWER LOCKOUT AND REMOTE POSITION.
CC-11	18#14, 1#12G.-3/4" CONDUIT (4#14 SPARE CONDUCTOR INCLUDED) FOR PUMP 2 START/STOP, RUN STATUS, FAULT STATUS, CONTROL POWER LOCKOUT AND REMOTE POSITION.
CC-12	8#14, 1#16 FOR GENERATOR RUN STATUS, GENERAL FAULT STATUS.
IC-1	6#14, 1#12G., 1-#16 TPS -1" CONDUIT FOR HIGH WET AND LOW WET WELL LEVEL FLOAT SWITCHES AND LEVEL TRANSMITTER - MARK CONDUIT INTRINSICALLY SAFE WIRING.
IC-2	2 CAT5E CABLES, 3 #16 TPS, 1" CONDUIT FOR ETHERNET COMMUNICATION FROM PCP ETHERNET SWITCH TO VFD/RVSS AND VFD SPEED CONTROL, SPEED REFERENCE AND MOTOR CURRENT MONITORING.
IC-3	2 CAT5E CABLES, 3 #16 TPS, 1" CONDUIT FOR ETHERNET COMMUNICATION FROM PCP ETHERNET SWITCH TO VFD/RVSS AND VFD SPEED CONTROL, SPEED REFERENCE AND MOTOR CURRENT MONITORING.
IC-4	1 #16 TPS. 3/4" CONDUIT FOR FORCE MAIN PRESSURE TRANSMITTER
IC-5	26#16, 1#12G AND 8 #16 TPS, 1-1/2" CONDUIT FOR ALARM SIGNALS FROM PCP TO SCADA PANEL (TELOG).
IC-6	2#12, 1#12G 3/4" CONDUIT FOR ALARM SIGNALS FROM CHECK VALVE TO PCP.
IC-7	2#12, 1#12G 3/4" CONDUIT FOR ALARM SIGNALS FROM CHECK VALVE TO PCP.
IC-8	1 BELDEN 9536 CABLE, 1#12G 3/4" CONDUIT FROM DONGLE TO SCADA PANEL.
IC-9	1 BELDEN 6660FT CABLE, 1/2" CONDUIT FROM DOOR SWITCH TO DONGLE. INSTALL CONDUIT FROM DONGLE TO LOCATION NEAR DOOR SWITCH. EXTEND CABLE TO SWITCH.

NANSEMOND 1646 SUFFOLK 1742 19 74 CITY of SUFFOLK, VIRGINIA

CITY OF SUFFOLK, VIRGINIA

DEPARTMENT OF PUBLIC UTILITIES
442 W. WASHINGTON STREET
SUFFOLK, VA 23434

PUBLIC FACILITIES MANUAL VOLUME II

WASTEWATER PUMP STATION INSTRUMENTATION AND CONTROL

REVISIONS

NO.	DESCRIPTION	DATE

PUMP STATION CONTROL SYSTEM CONDUIT RISER DIAGRAM AND SCHEDULE

Drawing No.

I-8VS

Scale: NOT TO SCALE | 2017 RELEASE 1

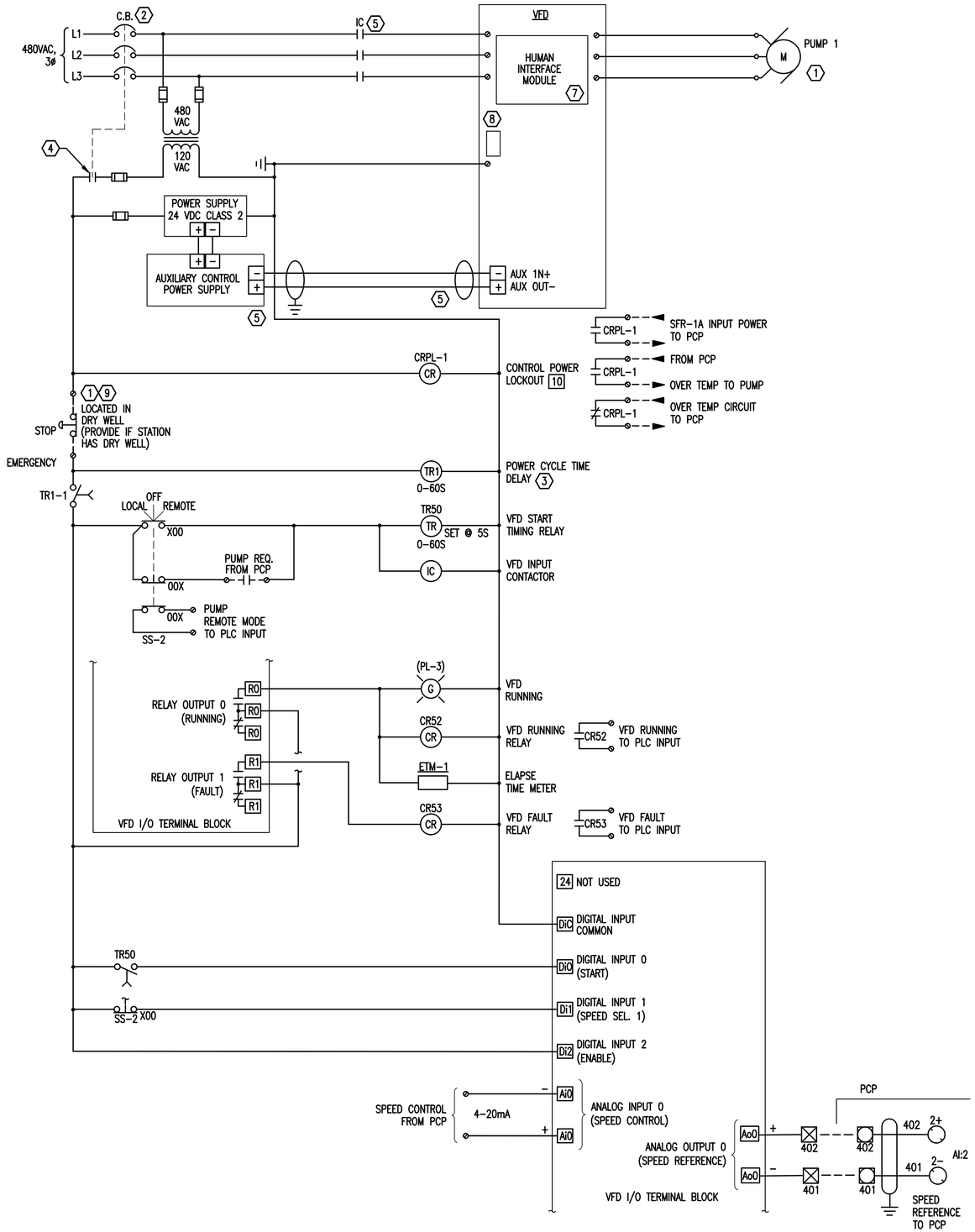

PUMP 1 VFD ELEMENTARY 6

NOT TO SCALE

(TYPICAL FOR PUMP 2 VFD)

DRAWING NOTES

1. UNLESS OTHERWISE NOTED ALL ITEMS AND EQUIPMENT ARE NEW.
2. SHORT CIRCUIT CURRENT RATING OF VFD ASSEMBLY SHALL BE 65KRMS AMPERES MIN.
3. ALL INDICATING LIGHTS SHALL BE LED PUSH TO TEST TYPE.
4. GROUND AND WIRE MOTOR PER NEC.

SPECIFIC NOTES

1. EQUIPMENT LOCATED REMOTE FROM VFD ENCLOSURE.
2. MAIN CIRCUIT BREAKER FOR VFD ENCLOSURE EQUIPMENT.
3. SET AT 10 SECOND DELAY FOR PUMP 1, 20 SECOND DELAY FOR PUMP 2.
4. AUXILIARY CONTACT CLOSES WHEN MAIN CIRCUIT BREAKER CLOSES.
5. PROVIDE VFD INPUT CONTACTOR AND AUXILIARY CONTROL POWER SUPPLY TO ISOLATE VFD FROM POWER LINE WHEN NOT IN OPERATION.
6. ALL CONNECTIONS MAY NOT BE SHOWN TO PROVIDE COMPLETE CONTROL SYSTEM REQUIREMENTS.
7. MOUNT HMI KEYPAD ON DRIVE DOOR FOR VFD.
8. PROVIDE ETHERNET COMMUNICATIONS FOR DRIVE TO PLC.
9. EMERGENCY STOP (ES) USED ONLY ON WET PIT DRY PIT STATIONS. MOUNT ON WALL NEAR PUMP.
10. RELAY SHALL BE CPRL−2 FOR PUMP 2

NANSEMOND 1646 SUFFOLK 1742 19 74 CITY of SUFFOLK, VIRGINIA

CITY OF SUFFOLK, VIRGINIA

DEPARTMENT OF PUBLIC UTILITIES
442 W. WASHINGTON STREET
SUFFOLK, VA 23434

PUBLIC FACILITIES MANUAL VOLUME II

WASTEWATER PUMP STATION INSTRUMENTATION AND CONTROL

REVISIONS

NO.	DESCRIPTION	DATE

PUMP VFD ELEMENTARY DIAGRAM

Drawing No.

I-9VS

Scale: NOT TO SCALE | 2017 RELEASE 1

DRAWING NOTES

1. UNLESS OTHERWISE NOTED ALL ITEMS AND EQUIPMENT ARE NEW.
2. SHORT CIRCUIT CURRENT RATING OF VFD ASSEMBLY SHALL BE 65KRMS AMPERES MIN.

SPECIFIC NOTES

1. THE CONTRACTOR IS RESPONSIBLE FOR THE COMPLETE INSTALLATION, WIRING, AND GROUNDING OF THE VFD SYSTEM AND FOR COMPLIANCE TO ANY CODE. NATIONAL, LOCAL OR OTHERWISE, FOR PROPER INSTALLATION THE VFD SYSTEM AND/OR THE ASSOCIATED EQUIPMENT.
2. VFD ENCLOSURES ARE TO FIT IN SPACE PROVIDED AS SHOWN ON DRAWINGS.
3. INDICATING LIGHTS SHALL BE PUSH-TO-TEST TYPE.
4. PROVIDE A MINUMUM 12" OF CLEARANCE BETWEEN VFD ENCLOSURES FOR COOLING AND FAN/FILTER MAINTENANCE

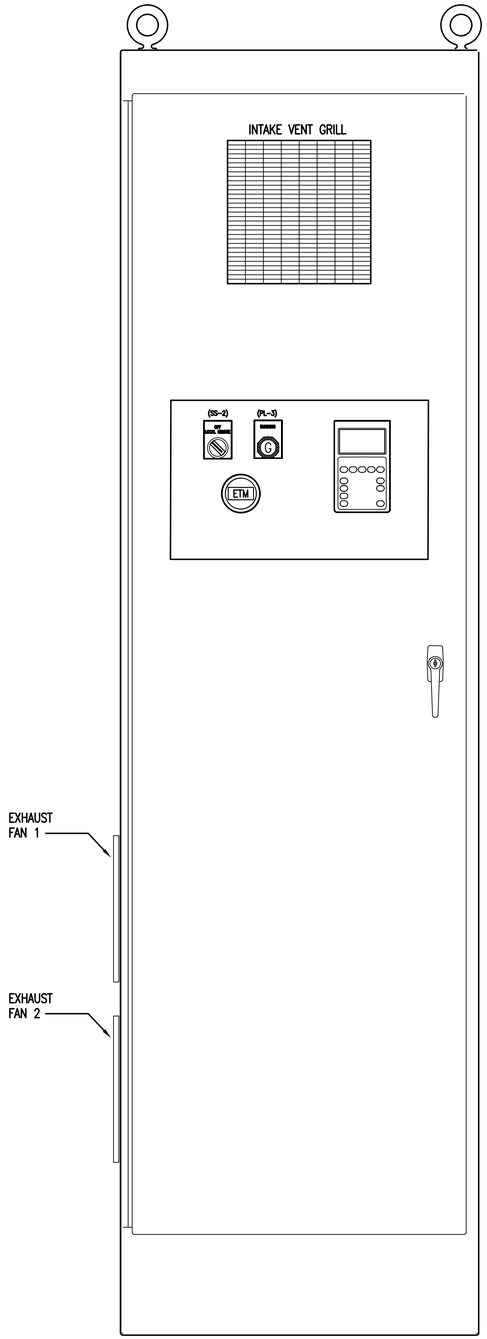

PUMP 1 VFD ENCLOSURE ELEVATION (1)(2)(4)

NOT TO SCALE

(TYPICAL FOR PUMP 2 VFD ENCLOSURE)

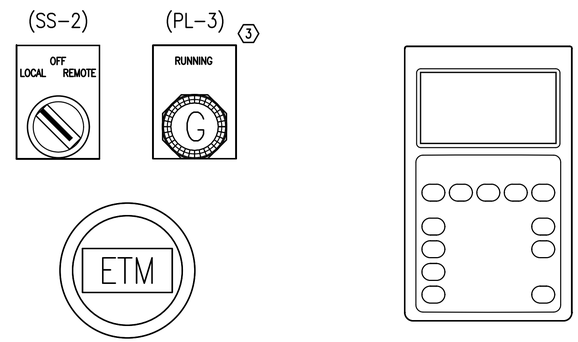

VFD PANEL LAYOUT

NANSEMOND 1646 SUFFOLK 1742 19 74 CITY of SUFFOLK, VIRGINIA

CITY OF SUFFOLK, VIRGINIA

DEPARTMENT OF PUBLIC UTILITIES
442 W. WASHINGTON STREET
SUFFOLK, VA 23434

PUBLIC FACILITIES MANUAL VOLUME II

WASTEWATER PUMP STATION INSTRUMENTATION AND CONTROL

REVISIONS

NO.	DESCRIPTION	DATE

RAW SEWAGE PUMP VFD ENCLOSURE ELEVATION

Drawing No.

I-10VS

Scale: NOT TO SCALE | 2017 RELEASE 1

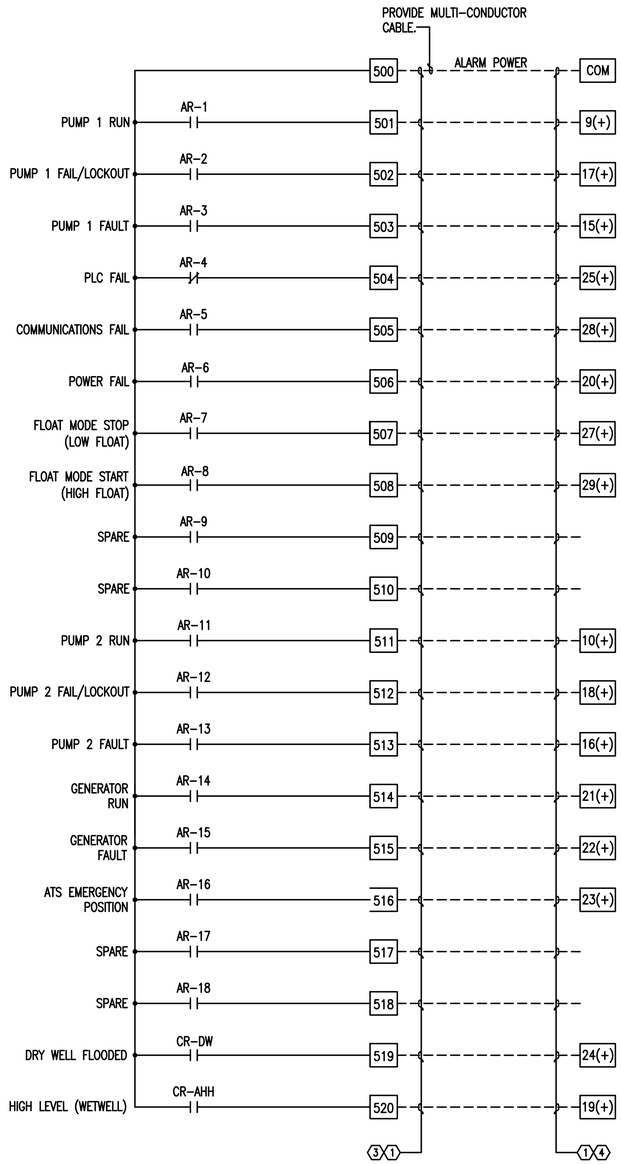

ALARM TERMINALS

NOT TO SCALE

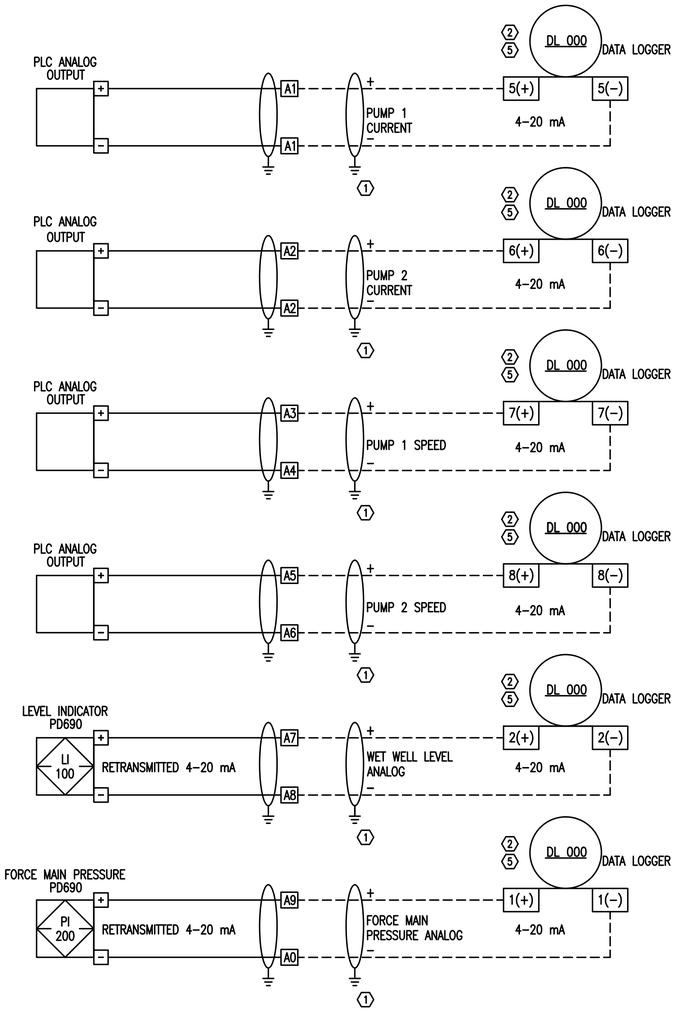

SPECIFIC NOTES

1. ALARM SIGNAL WIRING TO SCADA SYSTEM.
2. CONNECT SCADA SYSTEM TO PRESSURE AND LEVEL SIGNALS. VERIFY INPUT POINTS WITH CITY.
3. PUMP CONTROL PANEL TERMINATIONS.
4. SCADA SYSTEM TERMINATION POINTS.
5. SET SCADA SYSTEM SWITCH TO "CURRENT" POSITION.

NANSEMOND 1646 SUFFOLK 1742
19 74
CITY of SUFFOLK, VIRGINIA

CITY OF SUFFOLK, VIRGINIA

DEPARTMENT OF PUBLIC UTILITIES
442 W. WASHINGTON STREET
SUFFOLK, VA 23434

PUBLIC FACILITIES MANUAL VOLUME II

WASTEWATER PUMP STATION INSTRUMENTATION AND CONTROL

REVISIONS

NO.	DESCRIPTION	DATE

PUMP CONTROL PANEL SCADA CONNECTIONS

Drawing No.

I-11VS

Scale: NOT TO SCALE | 2017 RELEASE 1

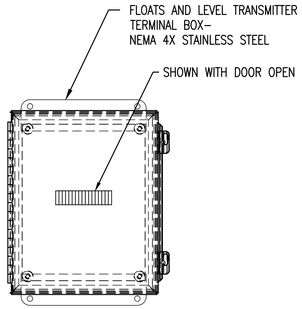

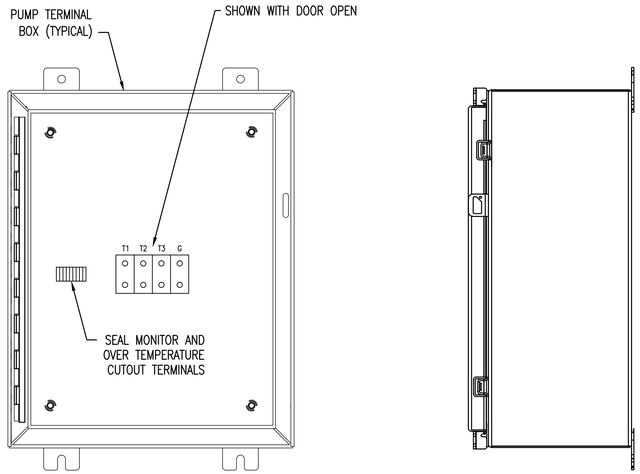

NOTE:
1. TERMINAL BOXES SHALL BE NEMA 4X STAINLESS STEEL.
2. MARK TERMINAL BOXES FOR PUMP SERVED.
3. PUMP TERMINAL BOXES NOT TYPICAL TO ALL SITES. REFER TO ELECTRICAL AND INSTRUMENTATION DWGS.

TERMINAL BLOCK LAYOUT
NOT TO SCALE

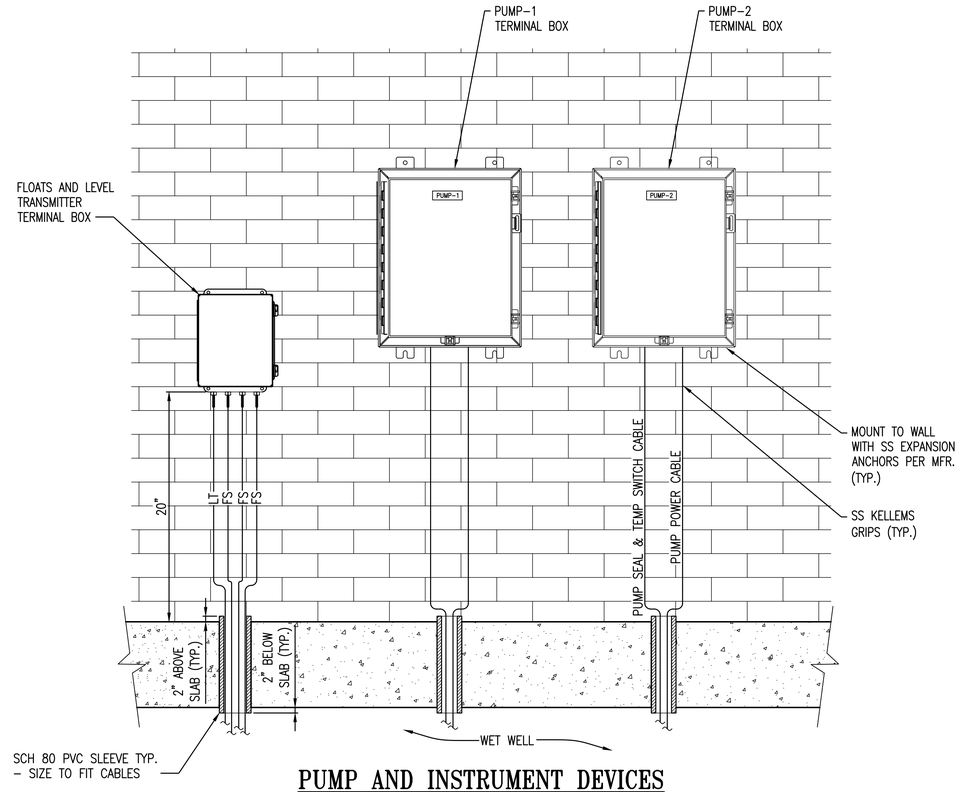

PUMP AND INSTRUMENT DEVICES TERMINAL BOX ELEVATION
NOT TO SCALE

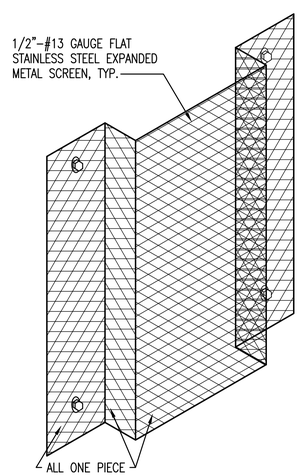

PROTECTIVE METAL SCREEN ENCLOSURE
NOT TO SCALE

DRAWING NOTES:
1. LAYOUT OF EQUIPMENT MAY VARY PER SITE. SOME SITES MAY NOT INCLUDE ALL EQUIPMENT SHOWN.
2. DIMENSIONS OF WIRE MESH ENCLOSURE SHALL DEPEND ON EQUIPMENT LAYOUT.

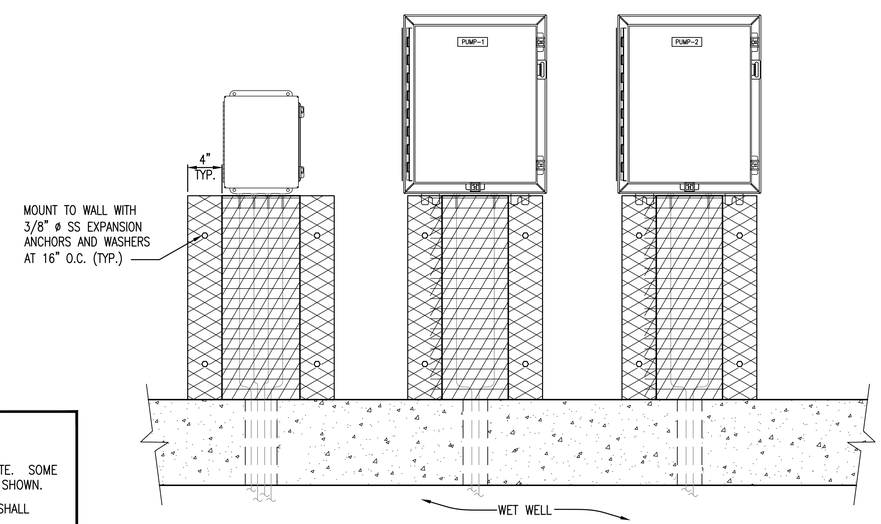

PROTECTIVE METAL SCREEN – ELEVATION
NOT TO SCALE

NANSEMOND 1646 SUFFOLK 1742 19 74 CITY of SUFFOLK, VIRGINIA

CITY OF SUFFOLK, VIRGINIA
DEPARTMENT OF PUBLIC UTILITIES
442 W. WASHINGTON STREET
SUFFOLK, VA 23434

PUBLIC FACILITIES MANUAL VOLUME II

WASTEWATER PUMP STATION INSTRUMENTATION AND CONTROL

REVISIONS

NO.	DESCRIPTION	DATE

TERMINAL BOX DETAILS

Drawing No.
I-12VS

Scale: NOT TO SCALE | 2017 RELEASE 1

APPENDIX K

GENERATOR

AND

AUTOMATIC TRANSFER SWITCH

SPECIFICATIONS

This page intentionally left blank.

APPENDIX K

GENERATOR

AND

AUTOMATIC TRANSFER SWITCH

SPECIFICATIONS

Standby Emergency Generator (Genset) and Automatic Transfer Switch (ATS)

Department Projects:

- The ATS and Genset shall be the standard Caterpillar equipment provided by Carter Machinery Company, Inc. (Carter) for use by the Department.
- Generator enclosure color shall be selected by the Department.
- Consultant shall size the Genset based on all equipment (fans, lights, heater, etc.) including the lead pump operating and the lag pump starting.
- Contractor shall purchase the standard ATS from Carter.
- The City shall lease the Genset from Tidewater Energy Services, LLC (TES) or purchase it from Carter. The City shall advise the Consultant accordingly.
- Contractor shall provide and install the concrete pad and all required conduits for the Genset.
- Contractor shall coordinate delivery of the Genset with Carter or TES and provide the necessary equipment, materials and labor to offload, set and anchor it to the concrete pad.
- Contractor shall provide, pull and label all power, including circuit(s) for Genset block heater and battery charger, and communication wires from the ATS and pump station breaker panel to the Genset control and breaker boxes. Contractor shall connect all power wires and Carter or TES shall connect all communication wires.
- Contractor shall be responsible for testing of the ATS.
- Carter or TES shall be responsible for testing of the Genset.
- Contractor to provide full fuel tank at time of pump station acceptance.
- For a Natural Gas Genset, the Contractor shall provide a properly sized Service Regulator.

Developer Projects:

- The ATS and Genset shall be the standard Caterpillar equipment provided by Carter Machinery Company, Inc. (Carter) for use by the Department.
- Generator enclosure color shall be selected by the Department.
- Consultant shall size the Genset based on all equipment (fans, lights, heater, etc.) including the lead pump operating and the lag pump starting.
- Contractor shall purchase the standard Genset and ATS from Carter.
- Contractor shall provide and install the concrete pad and all required conduits for the Genset.
- Contractor shall coordinate delivery of the Genset with Carter and provide the necessary equipment, materials and labor to offload, set and anchor it to the concrete pad.
- Contractor shall provide, pull and label all power, including circuit(s) for Genset block heater and battery charger, and communication wires from the ATS and pump station breaker panel to the Genset control and breaker boxes. Contractor shall connect all power wires and Carter shall connect all communication wires.
- Contractor shall be responsible for testing of the ATS and Genset.
- Upon written direction from the Department the Contractor shall either: A) transfer ownership of the Genset to TES at no cost prior to pumps station acceptance by the City; or B) transfer ownership of the Genset to the City with all other improvements at pump station acceptance.
- Contractor to provide full fuel tank at pump station acceptance.

SECTION 16231

DIESEL ENGINE GENERATORS

PART 1 - GENERAL

1.01 NOTE

A. The requirements of the general electrical provisions shall apply to all work specified under this section.

1.02 REFERENCES

A. The completed installation shall comply with the requirements of the latest issue of NFPA 37 - COMBUSTION ENGINES.

B. Provide a certified engine per the EPA's Nonroad Source Emissions Standard 40 CFR89. The appropriate tier level shall apply based upon the HP of the engine.

C. The electrical generating system shall meet all requirements of NFPA 110-1988 including design specifications, prototype tests, one-step full-load pickup, and installation acceptance.

1.03 SCOPE

A. The work includes all labor, materials, equipment and services necessary for the installation a standby power diesel engine generator system ready for satisfactory and standby operation.

B. Generator shall be provided for Department or Developer Projects as described in Appendix K of the PFM V-II.

C. No. 2 diesel fueled engine-generator set shall be equipped with sound attenuated weatherproof housing for exterior mounting, complete with fuel supply system, starting battery and charger, starting and control panels, automatic exercise controller, exhaust silencer and piping, and remote alarm contacts.

1.04 SUBMITTALS

A. Submit shop drawings, manufacturer's product data, etc., in accordance with provisions of the applicable project documents. Manufacturer's data shall include specifications, installation instructions and general recommendations for standby power engine-generator system. Include data substantiating that proposed materials comply with specified requirements.

B. The Contractor shall provide drawings for all schematics and a detailed interconnect diagram for the engine-generator set, controls, battery charging system, automatic transfer switch and remote alarms in addition to the required catalog cuts. Battery calculations shall also be provided.

C. Submit a color sample of generator enclosure for approval by the City.

D. Upon completion of the project the Contractor shall prepare record ("as built") schematic and interconnect drawings.

1.05 SYSTEM DESCRIPTION

A. Upon loss of any phase of utility power or reduction of the nominal voltage by 10 percent, the engine will automatically start and loads will be transferred from the utility bus to the standby engine bus.

B. When utility power is restored to at least 95 percent of the nominal voltage, the following shall occur:

1. Automatic transfer of load back to utility power after 15 minutes of operation.

2. The engine shall run for a cool down period without load as recommended by the engine manufacturer.

3. If the utility power is lost or reduced by 10 percent of the nominal voltage at any time during this phase of operation, the emergency AC system will automatically pick up the load, and reset all timers for proper minimum running time and engine cool down.

4. The automatic standby power system shall be capable of returning all components to the ready mode after utility power has been restored.

C. Standby generator shall be provided with controller to automatically exercise the unit with or without load on a regularly scheduled weekly or biweekly basis. The preferred exercise method is to program the Automatic Transfer Switch to operate the generator.

1.06 QUALITY ASSURANCE

A. The responsibility for performance under this Section in its entirety shall not be split up among individual suppliers of components comprising the standby power system, but shall be assumed solely by the supplier of the generator. The engine generator set shall be a factory assembled and tested product. Local assembly of components to make an engine generator set will not be acceptable.

B. Engine Exhaust Emissions: Comply with applicable state and local government requirements. Provide an EPA, Tier 2 certified engine as a minimum.

C. Comply with ASME B15.1.

D. Comply with NFPA 37.

E. Comply with NFPA 70.

F. Comply with NFPA 99.

G. Comply with NFPA 110 requirements for Level 1 emergency power supply system.

H. Comply with UL 2200

I. Noise Emission: Comply with applicable state and local government for noise level at adjacent property boundaries due to sound emitted by generator set including engine, engine exhaust, engine cooling-air intake and discharge, and other components of installation.

PART 2 - PRODUCTS

2.01 MANUFACTURER

A. Generator and supplier shall be on the Department's Approved Products List.

2.02 GENERAL

A. Engine-generator set unit shall have a standby rated output of not less than that indicated on drawings at 0.8 power factor at 150 feet altitude with an ambient temperature of 122 degrees F. Unit shall operate at the Project's specified voltage, phase, and frequency. Rating shall be with all accessories. Unit shall be designed for automatic starting and transfer of the emergency starting load upon loss of any phase of the normal power source, and automatic re-transfer and unit shut-down upon restoration of the normal power source.

B. The engine-generator shall be provided with safety shields over all belts, rotating parts, exposed gears and similar items.

C. Unit shall be by Caterpillar, of size and configuration shown on the Drawings.

2.03 ENGINE

A. Engine shall be 4 cycle turbo charged, radiator cooled type, having necessary horsepower to deliver the rated output at 1800 RPM. Engine shall be equipped with the following:

1. Pressure type fuel injection system
2. Fuel oil pump - high lift with a total suction head of 20 feet
3. Replaceable element type fuel filters
4. Electronic solenoid fuel shut off valve
5. Electronic isochronous governor, steady-state regulation
6. Lube oil pump
7. Lube oil pressure relief
8. Lube oil cooler
9. Lube oil level indicator/dip stick
10. Full flow replaceable lube oil filter
11. Replaceable dry combustion air filter
12. All contacts, sensors and other miscellaneous elements to provide all pre-failure alarms and failure alarms and all shutdown functions required
13. Axial cooling for engine driver
14. Set mounted radiator with a duct mounted flange
15. Heavy-duty 24 volt Direct Current (DC) electric starter motor
16. Engine mounted thermostatically controlled jacket water heater that shall be disconnected whenever the engine starts. Heater shall be 2 - 6420 watts, 480 volts, single phase, 60 Hz. (750kW); 1500 watts, 120 volts single phase, 60 Hz. (100kW).
17. Thermostats to maintain proper operating temperatures
18. Prestone anti-freeze protection to minus 20 degree F
19. Coolant corrosion resistor with replaceable element
20. Flexible fuel oil lines (supply and return)
21. Self-sealing, pre-lubricated coolant pump
22. Manually operated in-line priming pump

2.04 GENERATOR

A. Generator shall be single prelubricated bearing, self-aligning, four-pole, synchronous type, revolving field, with amortisseur windings, direct drive centrifugal blower for proper cooling and minimum noise, temperature compensated solid-state voltage regulator, with brushless rotating rectifier exciter system. Generator shall be directly connected to engine flywheel housing and driven through a flexible coupling to insure a permanent alignment; gear driven generators are not acceptable under this Section. Insulation shall meet NEMA MG1 for Class H. The maximum temperature rise shall not exceed 105 degrees C ambient. Generator design shall prevent potentially damaging shaft currents.

B. Voltage regulation shall be solid-state design and shall function by controlling the exciter magnetic field between stator and rotor to provide no load to full load regulation of rated voltage within +/-.5 percent during steady-state conditions. The engine-generator set and regulator shall be able to sustain at least 90 percent of no load voltage for 10 seconds with 300 percent of rated load at near zero power factor connected to its terminals. The voltage regulator shall be insensitive to severe load induced waveshape distortion from SCR or thyrister circuits such as those used in battery charging and motor speed control equipment. Include a permanent magnet generator.

C. Exciter shall be three-phase, full-wave, rectified, with heavy-duty silicon diodes mounted on the common rotor shaft and sized for maximum motor starting loads. Systems using three-wire, solid-state control elements (such as transistors or SCR's) rotating on the rotor shall not be acceptable.

D. Generator shall meet or exceed the NEMA "Standards for Motors and Generators". Generators shall also meet or exceed ANSI and IEEE Standards. Provide generator with interference suppression for MGI-22.43.

E. The three-phase, broad range, reconnectible generator shall have 12 leads brought out to allow connection by user to obtain any of the available voltages for the unit.

2.05 CONTROL PANEL

A. Provide a digital lighted, unit mounted control module that is factory built, wired, tested, and shock-mounted by the generator manufacturer.

B. Engine-generator set control shall include the following:

1. Current and potential transformers as required.

2. Remote, two-wire controls with start-stop terminals.

3. Low voltage power circuit breaker equipped with static trip elements: longtime, short time, and instantaneous trips.

4. Control circuit protection.

5. Manual selector switch: RUN - STOP - REMOTE.

6. Automatic engine shutdown for the following fault conditions:

   a. Overcrank
   b. Overspeed
   c. Low oil pressure
   d. High engine (coolant) temperature
   e. Operation of a remote manual stop station

7. Indicator lamps shall be provided to signal the following functions:

   a. RUN - indicates start system disconnect (green)
   b. OVERCRANK - indicates the starter has been locked out because cranking time was excessive (red)
   c. OVERSPEED - indicates engine has shutdown because of excessive rpm (red)
   d. HIGH COOLANT TEMPERATURE - indicates engine has shutdown because of critically high temperature (red)
   e. LOW OIL PRESSURE - indicates engine has shutdown because of critically low oil pressure (red)
   f. PRE HIGH COOLANT TEMPERATURE - indicates engine temperature is marginally high (yellow)
   g. PRE LOW OIL PRESSURE - indicates oil pressure is marginally low (yellow)
   h. LOW COOLANT TEMPERATURE - indicates inoperative coolant heater
   i. SWITCH OFF - indicates control switch is in the "STOP" position (flashing red)
   j. LOW FUEL - indicates fuel supply is marginally low (yellow)
   k. GROUND FAULT - indicates ground fault (red)
   l. Provide two SPARE fault condition lamps to be designated later (red)

8. A fault reset switch shall be provided to clear fault indications and allow restarting of the engine after shutdown faults. The control design shall be such that the fault indication shall remain until reset. The fault indicator memory shall not be dependent on the pressure of either ac or dc voltage and shall retain the fault status memory even through complete removal and replacement of the starting batteries. The fault reset function shall operate only when the RUN-STOP-REMOTE switch is in the STOP position. Provide a test switch for indicating lights.

9. Voltmeter, AC - 2 percent accuracy with three phase selector switch with positions for reading phase-to-phase voltages, phase-to-neutral voltages and off (7 positions total).

10. Ammeter, AC - 2 percent accuracy with three phase selector switch with positions for reading phase currents and off (4 positions total).

11. Frequency meter, 45-65 Hz (direct reading dial type).

12. Running time meter (hours - +/-0.6 Hz accuracy).

13. Oil engine pressure gauge.

14. Coolant temperature gauge.

15. Remote stop switch contacts with remote stop switch mounted as shown on plans.

16. Voltage regulator.

17. Cranking cycler to provide three - 15 second cycles with provisions for recrank in the event of a false start.

18. Provisions for low voltage shutdown.

19. Lube oil temperature gauge.

20. Kilowatt meter.

C. Provide a 120 VAC heater with thermostat within the control panel to eliminate condensation.

D. Provide additional dry contacts as required to provide alarms as indicated on I & C Project Drawings and Specifications.

2.06 BATTERIES

A. Provide 24V the generator's specified DC engine start batteries sized to provide a minimum of 90 seconds of cranking. Control batteries shall be sized to provide control power for all functions for 12 hours upon loss of utility power. Batteries shall be lead acid. Batteries are to be equipped with explosion proof vents.

B. Provide a skid mounted welded steel battery rack for control and start batteries with bottom pan and an acid resistant molded plastic liner. Angles shall be arranged to support batteries on all sides. Grind smooth and thoroughly clean all welds. Paint with a rust resistant prime coat and an acid resistant finish coat.

C. Provide a hydrometer and mounting for hydrometer storage for checking batteries.

D. Provide heavy-duty battery cables and all necessary accessories required to interconnect the batteries and engine generator set.

2.07 BATTERY CHARGER

A. Provide a wall mounted fully automatic current limiting, self-protecting battery charger to automatically recharge the batteries. The charger shall be sized to charge both the start and control batteries. The charger shall maintain 24V the generator's specified DC output voltage with 120 Vac line voltage fluctuations of +/- 10 percent. Provide:

1. Two ranges - float and equalize for lead acid batteries.
2. Automatic AC line compensation.
3. DC cranking disconnect relay to disconnect battery during engine cranking.
4. Automatic surge suppressors.
5. Ammeter and voltmeter, DC.
6. Fused AC input and dc output.
7. Selector switch to transfer from float charge to high rate equalize charge.
8. Low battery voltage sensor and red light.
9. High battery voltage sensor and red light.
10. Charging current failure (loss of AC power) sensor and red light.
11. Power on green light.

B. Provide contacts for remote annunciation of the following:

1. Low battery voltage.
2. High battery voltage.
3. Charging current failure (loss of AC power).
4. Start battery rectifier failure.

C. The charger shall meet requirements of UL 1236.

2.08 FUEL TANK

A. Provide a double wall integral/sub-base fuel storage tank with sufficient capacity to allow the generator to operate for a minimum of 24-hours at 75% load and a rupture basin to contain 150% of tank capacity. The tank shall be made of corrosion resistant steel. Tank shall be provided with threaded connections for fuel suction and return, vent, drain and 2-inch fuel fill. Provide float switch and associated fuel level gauge; critical low level fuel engine shutdown float switch, alarm and engine shutdown contacts; and all wiring between tank and engine-generator. The tank shall be UL-142 rated.

B. Provide all piping from tank to generator fuel pump and return pipe to tank. Piping shall be installed as recommended in the generator manufacturer's installation instructions. Contractor shall provide necessary items to assure proper priming.

2.09 EXHAUST SYSTEM

A. Provide a critical type exhaust silencer, with flanged inlet and outlet connections mounted so that its weight is not supported by the engine. Provide a flanged flexible Type 316 stainless steel exhaust pipe, gas proof, 18 inches long minimum connection between the engine exhaust manifold and the silencer.

B. Exhaust piping and muffler shall be sized so that the total back pressure shall not exceed the maximum allowable engine back pressure. Piping shall be Schedule 40, Type 316 stainless steel.

C. Provide an exhaust condensation trap with manual drain valve to prevent condensation from entering the engine.

2.10 FUEL OIL PIPING

A. All fuel oil and vent piping shall be black steel pipe conforming to American Society for Testing Materials (ASTM) Standard ASTM A-106, Grade B, Schedule 40. Fittings for piping within chamber shall be 150-pound malleable iron fittings. Coat piping and fittings with High-Mil Sher-Tar Epoxy Coating (Sherwin Williams). All piping joints shall be fully formed prior to applying coating.

B. Pipe joint sealant shall be Teflon tape.

2.11 WEATHERPROOF HOUSING (SOUND ATTENUATED ENCLOSURE)

A. The engine generator set, complete with battery charger, generator control panel and other accessories shall be enclosed in a modular constructed weatherproof housing. The enclosure shall be vermin-proof. The enclosure shall be constructed

with removable side panels and end panels. The top and end panels shall be steel. The units shall have side and rear access doors.

B. Provide fixed louvered air intake ports on the enclosure sides. Ports shall be provided with bird screen. Gravity shutters which open upon engine start-up shall be provided at the fan discharge end.

C. Provide a 120 VAC alternator heater within the generator to eliminate condensation.

D. Unit shall be provided with a weatherproof shield sound attenuated enclosure which shall reduce average noise level to the site's specified level designated by the City. If a level is not described the enclosure shall reduce the average noise level to 75 db at 25 feet.

E. The enclosure's color shall be specified by the City per the site. If no color is called for, the manufacturer's standard enclosure color shall be acceptable.

F. The enclosure shall NOT have an externally mounted Emergency Stop (E-Stop) Button. It must be installed inside of the weatherproof enclosure.

2.12 CONCRETE MOUNTING PAD

A. Shall be of generator manufacturer's approved size, thickness, and pressure rating to have the generator mounted directly to.

B. Shall have a conduit "stub-up" area mating to generator so to be entirely masked upon generator mounting.

C. The mounting surface of the pad shall be at least 4" but not more than 8" above final grade of the site.

2.13 REMOTE COMMUNICATIONS

A. Provide EtherNet communication capability to communicate status and alarm conditions to the pump station control system. Communication capability, data tables and register information shall not be proprietary. Provide a detailed list of status and alarm points that may be monitored via EtherNet communication.

PART 3 - EXECUTION

3.01 GENERAL

A. Engine generator set shall be installed complete with all accessories. Provide all interconnecting wiring, power wiring, battery wiring, piping, fuel storage tank, etc.

3.02 INSTALLATION

A. Adjust start battery rectifier so that meters accurately indicate voltage.

B. Provide all fuel system piping. Piping shall be sized as required for proper fuel flow to engine. Contractor shall provide all supply, return, vent, and fill lines as shown on the Drawings and as required to provide a complete system, along with all fittings.

C. Provide main fuel, tank, gauges, valves, tank fill fittings, tank vent fittings, and necessary items as specified.

D. Contractor shall fill the fuel storage tank serving the engine generator set with the proper fuel at time of Acceptance by the Owner.

E. Engine, generator and radiator shall be mounted on a common structural steel base provided with shock or anti-vibration mounts, and mounts bolted to concrete pad.

3.03 FACTORY TESTS, CERTIFICATION AND WARRANTY

A. The engine generator set and set-mounted controls shall be factory assembled and tested as a system, prior to delivery to the site. A copy of the factory test report shall be provided, certifying the set maximum power level, voltage and frequency regulation, engine speed regulation, alternator temperature rise, proper operation of automatic controls, non-linear load bank test, etc.

B. The engine generator set shall be of a series which has been tested in accordance with procedures certified by an independent testing laboratory. Tests shall include the following:

1. Maximum power level
2. Maximum motor starting capability (KVA)
3. Structural soundness
4. Fuel consumption
5. Engine alternator cooling air flow

6. Transient response and steady-state governing

7. Alternator temperature rise

8. Single step load pickup

9. Harmonic analysis and voltage wave form deviation

10. Three-phase short circuit test for mechanical and electrical strength

11. Perform factory reactive testing at full load and rated power factor (0.8) for two hours prior to shipment from the factory.

C. The complete system shall be warranted by the manufacturer for a period of two years parts and labor (no deductible) after successful onsite test and acceptance by the Owner. Individual element warranties are not acceptable. Warranty document shall be provided.

3.04 ON-SITE TESTS

A. See Appendix B-12 Pump Station Acceptance Procedure of the PFM V-II for timing and specifics of required on-site testing.

B. Prior to pump start-up, field test the equipment to demonstrate it will start automatically on power loss. Correct, prior to pump start-up, any defect which becomes evident during this test.

C. During the Start-Up and Demonstration Test, subject the generator to a full load test, shut down and reset. Full load test shall be with all electrical devices energized (including one pump running) and the second pump starting, then both pumps running. Coordinate with transfer switch manufacturer's representative to test adjust and test transfer switch at the same time of the generator testing. Explain operating instructions and maintenance procedures to the Owner's operating personnel. Operating and maintenance instructions shall include the generator and auxiliary components. Furnish operating and maintenance instruction books for the unit(s) and any auxiliary equipment.

D. Engine-generator set shall have sufficient capacity to pick up the specified full load and stabilize within +5% of rated frequency within 10 seconds after loss of normal power.

E. Correct, prior to acceptance, any defect which becomes evident during this test. Perform any other tests that may be recommended by the manufacturer for the purpose of evaluation.

F. <u>Re-fuel generator after testing. DO NOT OVERFILL!</u>

3.05 MAINTENANCE MANUALS

A. The Contractor shall provide two sets of Operation and Maintenance (O&M) material in accordance with the Project Documents and as specified herein. The manual shall include the following:

1. Catalog data and detailed specification sheets for all elements of the system.

2. Schematics and wiring diagrams for all elements of the system.

3. Detailed interconnection diagrams for the engine-generator set, controls, battery charging system, and remote alarms.

4. Complete operating instructions, maintenance data, and parts list for all elements of the system including recommended fuels and lubricants.

5. Engine-generator factory test and onsite test reports.

3.06 EXTRA MATERIALS

A. Furnish extra materials described below that match products installed and that are packaged with protective covering for storage and identified with labels describing contents.

1. Fuses: One for every 10 of each type and rating, but no fewer than one of each.

2. Indicator Lamps: Two for every six of each type used, but no fewer than two of each.

3. Filters: One set each of lubricating oil, fuel, and combustion-air filters.

4. Block Heaters.

END OF SECTION

This page intentionally left blank.

SECTION 16232

NATURAL GAS ENGINE GENERATORS

PART 1 - GENERAL

1.01 NOTE

A. The requirements of the general electrical provisions shall apply to all work specified under this Section.

1.02 REFERENCES

A. The completed installation shall comply with the requirements of the latest issue of NFPA 37 - COMBUSTION ENGINES.

B. Provide a certified engine per the EPA's Non-road Source Emissions Standard 40 CFR89. The appropriate tier level shall apply based upon the HP of the engine.

C. The electrical generating system shall meet all requirements of NFPA 110-1988 including design specifications, prototype tests, one-step full-load pickup, and installation acceptance.

1.03 SCOPE

A. The work includes all labor, materials, equipment and services necessary for the installation a standby power natural gas engine generator system ready for satisfactory and standby operation.

B. Generator shall be provided for Department or Developer Projects as described in Appendix K of the PFM V-II.

C. Natural gas fueled engine-generator set shall be equipped with sound attenuated weatherproof housing for exterior mounting, complete with fuel supply system, starting battery and charger, starting and control panels, automatic exercise controller, exhaust silencer and piping, and remote alarm contacts.

1.04 SUBMITTALS

A. Submit shop drawings, manufacturer's product data, etc., in accordance with provisions of the applicable project documents and the PFM. Manufacturer's data shall include specifications, installation instructions and general recommendations for standby power engine-generator system. Include data substantiating that proposed materials comply with specified requirements.

B. The Contractor shall provide drawings for all schematics and a detailed interconnect diagram for the engine-generator set, controls, battery charging system, automatic transfer switch and remote alarms in addition to the required catalog cuts. Battery calculations shall also be provided.

C. Submit a color sample of generator enclosure for approval by the City.

D. Upon completion of the project the Contractor shall prepare record ("as built") schematic and interconnect drawings.

1.05 SYSTEM DESCRIPTION

A. Upon loss of any phase of utility power or reduction of the nominal voltage by 10 percent, the engine will automatically start and loads will be transferred from the utility bus to the standby engine bus.

B. When utility power is restored to at least 95 percent of the nominal voltage, the following shall occur:

1. Automatic transfer of load back to utility power after 15 minutes of operation.

2. The engine shall run for a cool down period without load as recommended by the engine manufacturer.

3. If the utility power is lost or reduced by 10 percent of the nominal voltage at any time during this phase of operation, the emergency AC system will automatically pick up the load, and reset all timers for proper minimum running time and engine cool down.

4. The automatic standby power system shall be capable of returning all components to the ready mode after utility power has been restored.

C. Standby generator shall be provided with controller to automatically exercise the unit with or without load on a regularly scheduled weekly or biweekly basis. The preferred exercise method is to program the Automatic Transfer Switch to operate the generator.

1.06 QUALITY ASSURANCE

A. The responsibility for performance under this Section in its entirety shall not be split up among individual suppliers of components comprising the standby power system, but shall be assumed solely by the supplier of the system. The engine generator set shall be a factory assembled and tested product. Local assembly of components to make an engine generator set will not be acceptable.

B. Engine Exhaust Emissions: Comply with applicable state and local government requirements.

C. Comply with ASME B15.1.

D. Comply with NFPA 37.

E. Comply with NFPA 70.

F. Comply with NFPA 99.

G. Comply with NFPA 110 requirements for Level 1 emergency power supply system.

H. Comply with UL 2200

I. Noise Emission: Comply with applicable state and local government for noise level at adjacent property boundaries due to sound emitted by generator set including engine, engine exhaust, engine cooling-air intake and discharge, and other components of installation.

PART 2 - PRODUCTS

2.01 MANUFACTURER

A. Generator and supplier shall be on the Department's Approved Products List.

2.02 GENERAL

A. Engine-generator set unit shall have a standby rated output of not less than that indicated on drawings at 0.8 power factor at 150 feet altitude with an ambient temperature of 122 degrees F. Unit shall operate at the Project's specified voltage, phase, and frequency. Rating shall be with all accessories. Unit shall be designed for automatic starting and transfer of the emergency starting load upon loss of any phase of the normal power source, and automatic re-transfer and unit shut-down upon restoration of the normal power source.

B. The engine-generator shall be provided with safety shields over all belts, rotating parts, exposed gears and similar items.

2.03 ENGINE

A. Engine shall be 4 cycle turbo charged, radiator cooled type, having necessary horsepower to deliver the rated output at 1800RPM. Engine shall be equipped with the following:

1. Gas carburetor
2. Secondary gas regulator
3. Electronic solenoid fuel shut off valve
4. Electronic isochronous governor, steady-state regulation
5. Lube oil pump
6. Lube oil pressure relief
7. Lube oil cooler
8. Lube oil level indicator/dip stick
9. Full flow replaceable lube oil filter
10. Replaceable dry combustion air filter
11. All contacts, sensors and other miscellaneous elements to provide all pre-failure alarms and failure alarms and all shutdown functions required
12. Axial cooling for engine driver
13. Set mounted radiator with a duct mounted flange
14. Heavy-duty 24 volt electric starter motor
15. Engine mounted thermostatically controlled jacket water heater that shall be disconnected whenever the engine starts. Heater shall be 6240 watts, 480 volts, single phase, 60 Hz.
16. Thermostats to maintain proper operating temperatures
17. Prestone anti-freeze protection to minus 10 degree F
18. Coolant corrosion resistor with replaceable element
19. Self-sealing, pre-lubricated coolant pump
20. Outside weatherhood protection
21. Sound attenuating enclosure
22. All pump control panel signals from generator to pump control panel shall be wired to terminal strips in generator.

2.04 GENERATOR

A. Generator shall be single pre-lubricated bearing, self-aligning, four-pole, synchronous type, revolving field, with amortisseur windings, direct drive centrifugal blower for proper cooling and minimum noise, temperature compensated solid-state voltage regulator, with brushless rotating rectifier exciter system. Generator shall be directly connected to engine flywheel housing and driven through a flexible coupling to insure a permanent alignment; gear driven generators are not acceptable under this Section. Insulation shall meet NEMA MG1 for Class H. The maximum temperature rise shall not exceed 105 degrees C ambient. Generator design shall prevent potentially damaging shaft currents.

B. Voltage regulation shall be solid-state design and shall function by controlling the exciter magnetic field between stator and rotor to provide no load to full load regulation of rated voltage within +/- .5 percent during steady-state conditions. The engine-generator set and regulator shall be able to sustain at least 90 percent of no load voltage for 10 seconds with 300 percent of rated load at near zero power factor connected to its terminals. The voltage regulator shall be insensitive to severe load induced wave shape distortion from SCR or thyristor circuits such as those used in battery charging and motor speed control equipment. Include a permanent magnet generator.

C. Exciter shall be three-phase, full-wave, rectified, with heavy-duty silicon diodes mounted on the common rotor shaft and sized for maximum motor starting loads. Systems using three-wire, solid-state control elements (such as transistors or SCR's) rotating on the rotor shall not be acceptable.

D. Generator shall meet or exceed the NEMA "Standards for Motors and Generators". Generators shall also meet or exceed ANSI and IEEE Standards. Provide generator with interference suppression for MGI-22.43.

E. The three-phase, broad range, reconnectible generator shall have 12 leads brought out to allow connection by user to obtain any of the available voltages for the unit.

2.05 CONTROL PANEL

A. Provide a digital lighted, unit mounted control module that is factory built, wired, tested, and shock-mounted by the generator manufacturer.

B. Engine-generator set control shall include the following:

1. Current and potential transformers as required.

2. Remote, two-wire controls with start-stop terminals.

3. Molded case line circuit breaker equipped with instantaneous magnetic trips and long time thermal trips. The instantaneous trips should be set in a range of 500 percent to 700 percent of the full load current of the alternator. The thermal trips shall operate in 15 to 45 minutes when load current is 120 percent of the rated alternator current.

4. Control circuit protection.

5. Manual selector switch: RUN - STOP - REMOTE.

6. Automatic engine shutdown for the following fault conditions:

   a. Overcrank
   b. Overspeed
   c. Low oil pressure
   d. High engine (coolant) temperature
   e. Operation of a remote manual stop station

7. Indicator lamps shall be provided to signal the following functions:

   a. RUN - indicates start system disconnect (green)
   b. OVERCRANK - indicates the starter has been locked out because cranking time was excessive (red)
   c. OVERSPEED - indicates engine has shutdown because of excessive rpm (red)
   d. HIGH COOLANT TEMPERATURE - indicates engine has shutdown because of critically high temperature (red)
   e. LOW OIL PRESSURE - indicates engine has shutdown because of critically low oil pressure (red)
   f. PRE HIGH COOLANT TEMPERATURE - indicates engine temperature is marginally high (yellow)
   g. PRE LOW OIL PRESSURE - indicates oil pressure is marginally low (yellow)
   h. LOW COOLANT TEMPERATURE - indicates inoperative coolant heater
   i. SWITCH OFF - indicates control switch is in the "STOP" position (flashing red)
   j. LOW FUEL - indicates fuel supply is marginally low (yellow)
   k. GROUND FAULT - indicates ground fault (red)
   l. Provide two SPARE fault condition lamps to be designated later (red)
   m. Provide additional dry contacts for all alarms for remote annunciation

8. A fault reset switch shall be provided to clear fault indications and allow restarting of the engine after shutdown faults. The control design shall be such that the fault indication shall remain until reset. The fault indicator memory shall not be dependent on the pressure of either ac or dc voltage and shall retain the fault status memory even through complete removal and replacement of the starting batteries. The fault reset function shall operate only when the RUN-STOP-REMOTE switch is in the STOP position. Provide a test switch for indicating lights.

9. Voltmeter, AC - 2 percent accuracy with three phase selector switch with positions for reading phase-to-phase voltages, phase-to-neutral voltages and off (7 positions total).

10. Ammeter, AC - 2 percent accuracy with three phase selector switch with positions for reading phase currents and off (4 positions total).

11. Frequency meter, 45-65 Hz (direct reading dial type).

12. Running time meter (hours - +/-0.6 Hz accuracy).

13. Oil engine pressure gauge.

14. Coolant temperature gauge.

15. Remote stop switch contacts with remote stop switch mounted as shown on plans.

16. Voltage regulator.

17. Cranking cycler to provide three - 15 second cycles with provisions for re-cranking in the event of a false start.

18. Provisions for low voltage shutdown.

19. Lube oil temperature gauge.

20. Kilowatt meter.

21. Alarm contacts for interfacing with PLC as indicated on I&C Drawings and Specifications.

C. Provide a 120 VAC heater with thermostat within the control panel to eliminate condensation.

2.06 BATTERIES

A. Provide 24V DC engine start batteries sized to provide a minimum of 90 seconds of cranking. Control batteries shall be sized to provide control power for all functions for 12 hours upon loss of utility power. Batteries shall be lead acid. Batteries are to be equipped with explosion proof vents.

B. Provide a skid mounted welded steel battery rack for control and start batteries with bottom pan and an acid resistant molded plastic liner. Angles shall be arranged to support batteries on all sides. Grind smooth and thoroughly clean all welds. Paint with a rust resistant prime coat and an acid resistant finish coat.

C. Provide a hydrometer and mounting for hydrometer storage for checking batteries.

D. Provide heavy-duty battery cables and all necessary accessories required to interconnect the batteries and engine generator set.

2.07 BATTERY CHARGER

A. Provide a wall mounted fully automatic current limiting, self-protecting battery charger to automatically recharge the batteries. The charger shall be sized to charge both the start and control batteries. The charger shall maintain 24V DC output voltage with 120 VAC line voltage fluctuations of +/- 10 percent. Provide:

1. Two ranges - float and equalize for lead acid batteries.
2. Automatic AC line compensation.
3. DC cranking disconnect relay to disconnect battery during engine cranking.
4. Automatic surge suppressors.
5. Ammeter and voltmeter, DC.
6. Fused AC input and dc output.
7. Selector switch to transfer from float charge to high rate equalize charge.
8. Low battery voltage sensor and red light.
9. High battery voltage sensor and red light.
10. Charging current failure (loss of AC power) sensor and red light and alarm.
11. Power on green light.

B. Provide contacts for remote annunciation of the following:

1. Low battery voltage.

2. High battery voltage.

3. Charging current failure (loss of AC power).

4. Start battery rectifier failure.

C. The charger shall meet requirements of UL 1236.

2.08 EXHAUST SYSTEM

A. Provide a critical type exhaust silencer, with flanged inlet and outlet connections mounted so that its weight is not supported by the engine. Provide a flanged flexible Type 316 stainless steel exhaust pipe, gas proof, 18 inches long minimum connection between the engine exhaust manifold and the silencer.

B. Exhaust piping and muffler shall be sized so that the total back pressure shall not exceed the maximum allowable engine back pressure. Piping shall be Schedule 40, Type 316 stainless steel.

C. Provide an exhaust condensation trap with manual drain valve to prevent condensation from entering the engine.

D. Provide a suitable wall thimble, rain cap at the exhaust outlet, expansion and contraction fittings and similar items as required for the exhaust pipe installation and termination and to protect the weatherproof housing.

E. Silencer and exhaust piping insulation shall be 1800 degree F insulation, or equivalent. Insulation to maintain a maximum surface temperature of 150 degrees. Insulation shall be properly installed so that it does not interfere with the silencer, flexible fittings and similar items.

F. Exhaust silencer and exhaust pipe shall be installed within generator enclosure.

2.09 FUEL PIPING

A. All fuel vent piping shall be black steel pipe conforming to American Society for Testing Materials (ASTM) Standard ASTM A-106, Grade B, Schedule 40. Fittings for piping within chamber shall be 150-pound malleable iron fittings. Coat piping and fittings with High-Mil Sher-Tar Epoxy Coating (Sherwin Williams). All piping joints shall be fully formed prior to applying coating.

B. Pipe joint sealant shall be Teflon tape.

2.10 WEATHERPROOF HOUSING (SOUND ATTENUATED)

A. The engine generator set, complete with battery charger, generator control panel and other accessories shall be enclosed in a modular constructed weatherproof housing. The enclosure shall be vermin-proof. The enclosure shall be constructed with removable side panels and end panels. The top and end panels shall be steel. The units shall have side and rear access doors.

B. Provide fixed louvered air intake ports on the enclosure sides. Ports shall be provided with bird screen. Gravity shutters which open upon engine start-up shall be provided at the fan discharge end.

C. Provide a 120 VAC alternator heater within the generator to eliminate condensation.

D. Unit shall be provided with a weatherproof shield sound attenuated enclosure, which shall reduce average noise level to 75db at 25 feet.

E. The enclosure's color shall be specified by the City per the site. If no color is called for, the manufacturer's standard enclosure color shall be acceptable.

F. The enclosure shall NOT have an externally mounted Emergency Stop (E-Stop) Button. It must be installed inside of the weatherproof enclosure.

2.11 CONCRETE MOUNTING PAD

A. Shall be of generator manufacturer's approved size, thickness, and pressure rating to have the generator mounted directly to.

B. Shall have a conduit "stub-up" area mating to generator so to be entirely masked upon generator mounting.

C. The mounting surface of the pad shall be at least 4" but not more than 8" above final grade of the site.

2.11 REMOTE COMMUNICATIONS

A. Provide EtherNet communication capability to communicate status and alarm conditions to the pump station control system. Communication capability, data tables and register information shall not be proprietary. Provide a detailed list of status and alarm points that may be monitored via EtherNet communication.

PART 3 - EXECUTION

3.01 GENERAL

A. Engine generator set shall be installed complete with all accessories. Provide all interconnecting wiring, power wiring, battery wiring, piping, etc.

3.02 INSTALLATION

A. Adjust start battery rectifier so that meters accurately indicate voltage.

B. Provide all fuel system piping. Piping shall be sized as required for proper fuel flow to engine. Contractor shall provide all supply, return, vent, and fill lines as required to provide a complete system, along with all fittings.

C. Engine, generator and radiator shall be mounted on a common structural steel base provided with shock or anti-vibration mounts, and mounts bolted to concrete pad.

3.03 FACTORY TESTS, CERTIFICATION AND WARRANTY

A. The engine generator set and set-mounted controls shall be factory assembled and tested as a system, prior to delivery to the site. A copy of the factory test report shall be provided, certifying the set maximum power level, voltage and frequency regulation, engine speed regulation, alternator temperature rise, proper operation of automatic controls, non-linear load bank test, etc.

B. The engine generator set shall be of a series which has been tested in accordance with procedures certified by an independent testing laboratory. Tests shall include the following:

1. Maximum power level
2. Maximum motor starting capability (KVA)
3. Structural soundness
4. Fuel consumption
5. Engine alternator cooling air flow
6. Transient response and steady-state governing
7. Alternator temperature rise
8. Single step load pickup
9. Harmonic analysis and voltage wave form deviation

10. Three-phase short circuit test for mechanical and electrical strength

11. Perform factory testing at full load and rated power factor (0.8) for two hours prior to shipment from the factory.

C. The complete system shall be warranted by the manufacturer for a period of two years parts and labor (no deductible) after successful onsite test and acceptance by the Owner. Individual element warranties are not acceptable. Warranty document shall be provided.

3.04 ON-SITE TESTS

A. See Appendix B-12 Pump Station Acceptance Procedure of the PFM V-II for timing and specifics of required on-site testing.

B. Prior to pump start-up, field test the equipment to demonstrate it will start automatically on power loss. Correct, prior to pump start-up, any defect which becomes evident during this test.

C. During the Start-Up and Demonstration Test, subject the generator to a full load test, shut down and reset. Full load test shall be with all electrical devices energized (including one pump running) and the second pump starting, then both pumps running. Coordinate with transfer switch manufacturer's representative to test adjust and test transfer switch at the same time of the generator testing. Explain operating instructions and maintenance procedures to the Owner's operating personnel. Operating and maintenance instructions shall include the generator and auxiliary components. Furnish operating and maintenance instruction books for the unit(s) and any auxiliary equipment.

D. Engine-generator set shall have sufficient capacity to pick up the specified full load and stabilize within +5% of rated frequency within 10 seconds after loss of normal power.

E. Correct, prior to acceptance, any defect which becomes evident during this test. Perform any other tests that may be recommended by the manufacturer for the purpose of evaluation.

3.05 MAINTENANCE MANUALS

A. The Contractor shall provide two sets of Operation and Maintenance (O&M) material in accordance with the Project Documents and as specified herein. The manual shall include the following:

1. Catalog data and detailed specification sheets for all elements of the system.

2. Schematics and wiring diagrams for all elements of the system.

3. Detailed interconnection diagrams for the engine-generator set, controls, battery charging system, and remote alarms.

4. Complete operating instructions, maintenance data, and parts list for all elements of the system.

5. Engine-generator factory test and onsite test reports.

3.06 EXTRA MATERIALS

A. Furnish extra materials described below that match products installed and that are packaged with protective covering for storage and identified with labels describing contents.

1. Fuses: One for every 10 of each type and rating, but no fewer than one of each.

2. Indicator Lamps: Two for every six of each type used, but no fewer than two of each.

3. Filters: One set each of lubricating oil, fuel, and combustion-air filters.

4. Block Heaters.

END OF SECTION

This page intentionally left blank.

SECTION 16415

AUTOMATIC TRANSFER SWITCHES

PART 1 - GENERAL

1.01 SUMMARY

A. This Section includes transfer switches rated 600 V and less, including the following:

1. Automatic transfer switches.

1.02 SUBMITTALS

A. Product Data: Include rated capacities, operating characteristics, furnished specialties, and accessories.

B. Shop Drawings: Dimensioned plans, sections, and elevations showing minimum clearances, conductor entry provisions, gutter space, installed features and devices, and material lists for each switch specified.

1. Wiring Diagrams: Single-line diagram. Show connections between transfer switch, power sources, and load; and show interlocking provisions.

C. Qualification Data.

D. Field quality-control test reports.

E. Operation and Maintenance Data: For each type of product to include in emergency, operation, and maintenance manuals. In addition to items specified in this Specification related to "Operation and Maintenance Data," include the following:

1. Features and operating sequences, both automatic and manual.

2. List of all factory settings of relays; provide relay-setting and calibration instructions, including software, where applicable.

1.03 QUALITY ASSURANCE

A. Manufacturer Qualifications: Maintain a service center capable of providing training, parts, and emergency maintenance repairs within a response period of less than eight hours from time of notification.

B. Testing Agency Qualifications: An independent agency, with the experience and capability to conduct the testing indicated, that is a member company of the

InterNational Electrical Testing Association or is a nationally recognized testing laboratory (NRTL) as defined by OSHA in 29 CFR 1910.7, and that is acceptable to authorities having jurisdiction.

1. Testing Agency's Field Supervisor: Person currently certified by the InterNational Electrical Testing Association or the National Institute for Certification in Engineering Technologies to supervise on-site testing specified in Part 3.

C. Source Limitations: Obtain automatic transfer switches, through one source from a single manufacturer. Automatic transfer switch shall be obtained from the generator supplier.

D. Electrical Components, Devices, and Accessories: Listed and labeled as defined in NFPA 70, Article 100, for emergency service under UL 1008, by a testing agency acceptable to authorities having jurisdiction, and marked for intended use.

E. Comply with NEMA ICS 1.

F. Comply with NFPA 70.

G. Comply with NFPA 110.

H. Comply with UL 1008 unless requirements of these Specifications are stricter.

PART 2 - PRODUCTS

2.01 MANUFACTURERS

A. Manufacturers: Subject to compliance with requirements of this Section, provide products by generator manufacturer. Automatic transfer switch shall be on the Department's Approved Products List.

2.02 GENERAL TRANSFER-SWITCH PRODUCT REQUIREMENTS

A. Indicated Current Ratings: Apply as defined in UL 1008 for continuous loading and total system transfer, including tungsten filament lamp loads not exceeding 30 percent of switch ampere rating, unless otherwise indicated.

B. Tested Fault-Current Closing and Withstand Ratings: Adequate for duty imposed by protective devices at installation locations in Project under the fault conditions indicated, based on testing according to UL 1008.

C. Annunciation, Control, and Programming Interface Components: Devices at transfer switches for communicating with remote programming devices, annunciators, or annunciator and control panels have communication capability matched with remote device.

D. Solid-State Controls: Repetitive accuracy of all settings is plus or minus 2 percent or better over an operating temperature range of minus 20 to plus 70 deg C.

E. Resistance to Damage by Voltage Transients: Components shall meet or exceed voltage-surge withstand capability requirements when tested according to IEEE C62.41. Components shall meet or exceed voltage-impulse withstand test of NEMA ICS 1.

F. Neutral Terminal: Solid and fully rated, unless otherwise indicated.

G. Enclosures: General-purpose NEMA 250, Type 12, complying with NEMA ICS 6 and UL 508, unless otherwise indicated.

H. Factory Wiring: Train and bundle factory wiring and label, consistent with Shop Drawings, either by color code or by numbered or lettered wire and cable tape markers at terminations.

1. Designated Terminals: Pressure type suitable for types and sizes of field wiring indicated.

2. Power-Terminal Arrangement and Field-Wiring Space: Suitable for top, side, or bottom entrance of feeder conductors as indicated.

3. Control Wiring: Equipped with lugs suitable for connection to terminal strips.

I. Electrical Operation: Accomplish by a nonfused, momentarily energized solenoid or electric-motor-operated mechanism, mechanically and electrically interlocked in both directions.

J. Switch Characteristics: Designed for continuous-duty repetitive transfer of full-rated current between active power sources.

1. Limitation: Switches using molded-case switches or circuit breakers or insulated-case circuit-breaker components are not acceptable. Switch Action: Double throw; mechanically held in both directions.

2. Contacts: Silver composition or silver alloy for load-current switching. Conventional automatic transfer-switch units, rated 225 A and higher, shall have separate arcing contacts.

3. Switch Action: Double-throw; mechanically held in both directions.

2.03 AUTOMATIC TRANSFER SWITCHES

A. Comply with Level 2 equipment according to NFPA 110.

B. Switching Arrangement: Double-throw type, incapable of pauses or intermediate position stops during normal functioning, unless otherwise indicated.

C. Manual Switch Operation: Under load, with door closed and with either or both sources energized. Transfer time is same as for electrical operation. Control circuit automatically disconnects from electrical operator during manual operation.

D. Signal-Before-Transfer Contacts: A set of normally open/normally closed dry contacts operates in advance of retransfer to normal source. Interval is adjustable from 1 to 30 seconds.

E. Digital Communication Interface: Matched to capability of remote annunciator or annunciator and control panel. In addition, the transfer switch shall be capable of EtherNet communication for data transfer (alarms and status) to pump station control system.

F. In-Phase Monitor: Factory-wired, internal relay controls transfer so it occurs only when the two sources are synchronized in phase. Relay compares phase relationship and frequency difference between normal and emergency sources and initiates transfer when both sources are within 15 electrical degrees, and only if transfer can be completed within 60 electrical degrees. Transfer is initiated only if both sources are within 2 Hz of nominal frequency and 70 percent or more of nominal voltage.

G. A phase monitor shall be provided on the load side of the transfer switch and shall have two sets of form-C contacts for connection to the pump station control panel and the SCADA system for status and alarm annunciation. The phase monitor shall be capable of tripping on loss of phase, undervoltage and phase reversal. The phase monitor shall have an adjustable time delay on the status/alarm contacts. The 3-phase monitor shall be series 2644 as manufactured by Time Mark Corporation. Contractor shall coordinate and provide specific model rated for actual station voltage.

2.04 AUTOMATIC TRANSFER-SWITCH FEATURES

A. Undervoltage Sensing for Each Phase of Normal Source: Senses low phase-to-ground voltage on each phase. Pickup voltage is adjustable from 85 to 100 percent of nominal, and dropout voltage is adjustable from 75 to 98 percent of pickup value. Factory set for pickup at 90 percent and dropout at 85 percent.

B. Time delay for override of normal-source voltage sensing delays transfer and engine start signals. Adjustable from zero to six seconds, and factory set for one second.

C. Voltage/Frequency Lockout Relay: Prevents premature transfer to alternate service. Pickup voltage is adjustable from 85 to 100 percent of nominal. Factory set for pickup at 90 percent. Pickup frequency is adjustable from 90 to 100 percent of nominal. Factory set for pickup at 95 percent.

D. Time Delay for Retransfer to Normal Source: Adjustable from 0 to 30 minutes, and factory set for 10 minutes. Provides automatic defeat of delay on loss of voltage or sustained undervoltage of emergency source, provided normal supply has been restored.

E. Test Switch: Simulates normal-source failure.

F. Switch-Position Pilot Lights: Indicate source to which load is connected.

G. Source-Available Indicating Lights: Supervise sources via transfer-switch normal- and emergency-source sensing circuits.

1. Preferred Power Supervision: Green light with nameplate engraved "Preferred Source Available."

2. Alternate Power Supervision: Red light with nameplate engraved "Alternate Source Available."

H. Unassigned Auxiliary Contacts: Two normally open, single-pole, double-throw contacts for each switch position, rated 10 A at 240-V ac.

I. Transfer Override Switch: Overrides automatic retransfer control so automatic transfer switch will remain connected to alternate power source regardless of condition of normal source. Pilot light indicates override status.

J. Transfer switch shall be capable of transferring power to auxiliary power in the event of over/under voltage and frequency condition.

K. Engine Starting Contacts: One isolated and normally closed, and one isolated and normally open; rated 10 A at 32-V dc minimum.

L. Engine Shutdown Contacts: Time delay adjustable from zero to five minutes, and factory set for five minutes. Contacts shall initiate shutdown at remote engine-generator controls after retransfer of load to normal source.

M. Engine-Generator Exerciser: Solid-state, programmable-time switch starts engine generator and transfers load to it from normal source for a preset time, then

retransfers and shuts down engine after a preset cool-down period. Initiates exercise cycle at preset intervals Programmable by day of week and time of day.

1. Initial setting shall be for every Tuesday at 9:00 a.m.

2. Exerciser Transfer Selector Switch: Permits selection of exercise with and without load transfer.

3. Push-button programming control with digital display of settings.

4. Integral battery operation of time switch when normal control power is not available.

2.05 FINISHES

A. Enclosures: Manufacturer's standard enamel over corrosion-resistant pretreatment and primer.

2.06 SOURCE QUALITY CONTROL

A. Factory test and inspect components, assembled switches, and associated equipment. Ensure proper operation. Check transfer time and voltage, frequency, and time-delay settings for compliance with specified requirements. Perform dielectric strength test complying with NEMA ICS 1.

PART 3 - EXECUTION

3.01 INSTALLATION

A. Floor or wall mounted. Floor mounted shall be installed on a 4-inch high reinforced concrete base with chamfered edges. Extend base no more than 2-inches in all directions.

B. Mount in accordance with manufacturer’s specifications.

3.02 WIRING TO REMOTE COMPONENTS

A. Match type and number of cables and conductors to control and communication requirements of transfer switches as recommended by manufacturer. Increase raceway sizes at no additional cost to Owner if necessary to accommodate required wiring.

B. Control wiring to the generator control shall be 14 AWG, at a minimum of 8 pairs, in a separate conduit allowing space for expansion from the Automatic Transfer Switch to the generator control.

C. Communication wiring shall be 16 AWG or smaller shielded twisted pair.

3.03 CONNECTIONS

A. Ground equipment according to the Electrical requirements.

B. Connect wiring according to the Electrical requirements.

C. Tighten electrical connectors and terminals according to manufacturer's published torque-tightening values. If manufacturer's torque values are not indicated, use those specified in UL 486A and UL 486B.

3.04 FIELD QUALITY CONTROL

A. Manufacturer's Field Service: Engage a factory-authorized service representative to inspect, test, and adjust field-assembled components and equipment installation, including connections, and to assist in field testing. Testing shall be performed at the Generator and Automatic Transfer Switch Start-Up as required in Appendix B-12 of the PFM V-II. Report results in writing.

B. Testing Agency: Engage a qualified testing and inspecting agency to perform the following field tests and inspections and prepare test reports:

1. After installing equipment and after electrical circuitry has been energized, test for compliance with requirements.

2. Perform each electrical test and visual and mechanical inspection stated in NETA ATS, Section 7.22.3. Certify compliance with test parameters.

3. Measure insulation resistance phase-to-phase and phase-to-ground with insulation-resistance tester. Include external annunciation and control circuits. Use test voltages and procedure recommended by manufacturer. Comply with manufacturer's specified minimum resistance.

C. Check for electrical continuity of circuits and for short circuits.

D. Inspect for physical damage, proper installation and connection, and integrity of barriers, covers, and safety features.

E. Verify that manual transfer warnings are properly placed.

F. Perform manual transfer operation.

1. After energizing circuits, demonstrate interlocking sequence and operational function for each switch at least three times.

a. Simulate power failures of normal source to automatic transfer switches and of emergency source with normal source available.

b. Simulate loss of phase-to-ground voltage for each phase of normal source.
c. Verify time-delay settings.
d. Verify pickup and dropout voltages by data readout or inspection of control settings.
e. Perform contact-resistance test across main contacts and correct values exceeding 500 microhms and values for 1 pole deviating by more than 50 percent from other poles.

G. Report results of tests and inspections in writing. Record adjustable relay settings and measured insulation and contact resistances and time delays. Attach a label or tag to each tested component indicating satisfactory completion of tests. Leave a copy of the programmed settings sheet on-site.

H. Remove and replace malfunctioning units and retest as specified above.

3.05 OPERATING AND MAINTENANCE INSTRUCTIONAL PERIODS

A. The Contractor shall provide a factory-authorized service representative to train Owner's maintenance personnel to adjust, operate and maintain the transfer switch and related equipment. Training shall be conducted at the Start-Up and Demonstration event.

END OF SECTION